PIPER

Customer Services

PILOTEN-SERVICE
Straubing LBA II-A-170
Telefon (09429) 716

PA-24 COMANCHE

PARTS CATALOG

PA-24-180

PA-24-250

PA-24-260

PA-24-400

PIPER AIRCRAFT CORPORATION

752 464

THIS PARTS CATALOG SUPERSEDES ALL PREVIOUS PA-24 CATALOGS PRIOR TO JANUARY 1973

Published by
PUBLICATIONS DEPARTMENT
Piper Aircraft Corporation
752 464
January 1973

ISSUED: JANUARY 1973

PA-24-180
PA-24-250
PA-24-260
PA-24-400

INTRODUCTION

This Illustrated Parts Catalog is designed to provide simple but positive identification of replacement parts for the Piper "COMANCHE" Model PA-24 Series, manufactured by the Piper Aircraft Corporation of Lock Haven, Pennsylvania.
NOTE - UNDER NO CIRCUMSTANCES SHALL THIS CATALOG BE USED FOR RIGGING AND INSTALLATION PURPOSES.

It is suggested that this catalog be thoroughly studied to determine its arrangement prior to its utilization.

1. The catalog is divided into ten (10) major sections described as follows:
   a. Section I to IX inclusive contains all replacement parts for the complete airplane. Each section is subdivided and each division includes an illustration and a parts listing.
   b. Section X is the Miscellaneous Group. This Group includes a listing of the Optional Equipment Kits, Repair Kits and Special Tools.

2. The following is a brief explanation of the columns in the parts listing:
   a. The "FIGURE AND INDEX" column indicates the illustration figure number and its part index number. Example: (2-1), the 2 is the figure number and the 1 is the index number. The figure number appears only at the top of each parts listing page or at the beginning of each new parts listing.
   b. The "PART NUMBER" column contains the identifying number of the replacement part and this number must be shown on all Parts Orders.
   c. The "CODE" column is for the purpose of indicating special uses of the part. An explanation of the letter code used is shown below each listing.
   d. The "NOMENCLATURE" column indicates the part name. This name must be shown on all Parts Orders.
   e. The "NO. REQ." (Number Required) column represents the total quantity of parts used per aircraft per figure when the part is not indented and the quantity of parts used per assembly when the part is indented. The symbol "AR" listed in this column means "As Required". Indention Example:

Indentations of listings in the "Nomenclature column" indicate "assemblies" and "components" or "parts", in order of their indentations.

EXAMPLE

Code	NOMENCLATURE	No. Req.
	DOOR ASSEMBLY - Baggage compartment	
	FRAME ASSEMBLY - Baggage compartment door	
	HINGE ASSEMBLY - Baggage door	
	CLIP - Baggage door spring	

This listing is interpreted as follows:

If the DOOR ASSEMBLY (not indented) is ordered, it will include the three items listed under that item.

If the FRAME ASSEMBLY (indented one space) is ordered, it will include the two items listed under the subassembly.

If you want only a HINGE ASSEMBLY or CLIP, you order only that item.

   f. The "SERIAL NUMBERS AFFECTED" column indicates the part application by airplane serial number.

3. The "ATTACHING PARTS" such as nuts, bolts, screws, etc., that are available as commercial hardware items, are not generally supplied by the Piper Aircraft Corporation. The catalog lists, for your convenience, those attaching parts required for main assemblies and installations. The indentifying number for these parts appears after the part name.

4. All items of Optional Equipment are contained in the parts list in their proper sequence and sections. These items were not marked optional, since they are fully identified by their descriptions.

HOW TO IDENTIFY A PART IF YOU KNOW WHAT IT LOOKS LIKE AND KNOW WHERE IT IS LOCATED

(1) Refer to Figure 1 on page xi to determine the Section number in which the part is used.

(2) Refer to the Table of Contents on page viii and locate the section. Note the figure numbers that illustrate the various subgroups of this main section.

(a) Select the Figure title you think might contain the part you wish to identify and turn to the page specified.

(3) Find the part on the illustration and note the index number.

NOTE: If you don't find the part on this illustration try another figure in this group.

(4) Refer to the "Figure and Index Number" in the Parts Listing for complete description of the part.

HOW TO ORDER PARTS

In ordering parts for your Piper Airplanes, observe the following instructions which will aid in your getting the right parts required without delay.

a. Place your order with the distributor or dealer for your territory, since parts are available only through our distributor organization.

b. Always specify the model and serial number of your airplane.

c. Always specify Part Number, Name, type and quantity required.

d. Specify the method of shipment - freight, express, parcel post, air express, air freight, or air parcel post. Where the nature of the shipment requires it or when no instructions are given, we reserve the right to ship the most suitable way.

GENERAL INFORMATION

a. Shortages

All orders are checked and rechecked before leaving our Shipping Department. A packing slip is enclosed with the shipment and claims for errors or shortages must be made within three days after receipt of orders.

b. Returned Goods

No material should be returned to us without first securing our written permission. Material sent in without notice will be held at the owner's risk for thirty (30) days and will then be disposed of as we see fit.

Transportation charges must be PREPAID on returned goods or the shipment will be refused.

c. Transportation Liabilities

The Piper Aircraft Corporation cannot be held liable for damages to parts in transit from the factory. If a shipment is received in a damaged condition, have the delivery man or Transportation Company make a notation of the damage and file your claim with the Carrier. In case of concealed damage, do not attempt to remove the part from the shipping container, or endeavor to repair the damage, but call the Carrier and have his Claim Agent inspect the damage before filing your claim with the Carrier.

REVISIONS

The information compiled in this catalog will be kept current by revisions distributed periodically through the local distributor.

It is imperative that this material be inserted in the parts catalog at the time it is received. There will be two (2) types of revisions used to keep this catalog current.

I. Temporary Revision

This type revision will be distributed at any time it is necessary to forward information to the field. Complete page replacements may be included in this type revision and shall be inserted in the parts catalog per Paragraph II. The temporary revision may be inserted in the front of the catalog. These revisions will include deletions and additions of parts pertinent to different sections of the parts catalog. Therefore, when the temporary revision is received, review the catalog and mark the affected items with the date code of the latest revision for a ready reference.

II. Permanent Revision

This type revision will be distributed periodically and will supersede all previous temporary revisions. These revisions will be complete page replacements and shall be inserted in the parts catalog as per the instructions given below:

1. Replace the obsolete pages with revised pages of the same number.
2. Insert pages with page numbers followed by a small letter in direct sequence with the same common page number.
3. Insert pages with page numbers followed by a capital letter in direct sequence with the same common page number but after any pages with the same common page number followed by a small letter.

CURRENT REVISIONS ISSUED

Current, Permanent and Temporary Revisions to this PA-24 Series Parts Catalog issued January 1973 are as follows:

PA-24 SERIES SERIAL NUMBER INFORMATION

The following information should be kept in mind when ordering from this manual.

a. The serial numbers of the aircraft covered by this Parts Catalog are as follows:

(1) Serial numbers of the 1958 PA-24-180 and PA-24-250 Models are 24-1 to 24-336 inclusive.

(2) Serial numbers of the 1959 PA-24-180 and PA-24-250 Models are 24-337 to 24-1476 inclusive.

(3) Serial numbers of the 1960 PA-24-180 and PA-24-250 Models are 24-1477 to 24-2174, 24-2176 to 24-2298 inclusive.

(4) Serial numbers of the 1961 PA-24-180 and PA-24-250 Models are 24-2175, 24-2299 to 24-2843 inclusive.

(5) Serial numbers of the 1962 PA-24-180 and PA-24-250 Models are 24-2844 to 24-3284 inclusive.

(6) Serial numbers of the 1963 PA-24-180 and PA-24-250 Models are 24-3285 to 24-3557 inclusive.

(7) Serial numbers of the 1964 PA-24-180 and PA-24-250 Models are 24-3558 to 24-3641 inclusive, 24-3643 to 24-3687 inclusive.

(8) Serial numbers of the 1964 PA-24-400 Models are 26-2 to 26-148 inclusive.

(9) Serial numbers of the PA-24-260 Models are 24-3642, 24-4000 to 24-4246 inclusive, 24-4248 to 24-4299 inclusive.

(10) Serial numbers of the PA-24-260 "B" Models are 24-4247, 24-4300 to 24-4782 inclusive, 24-4784 to 24-4803 inclusive.

(11) Serial numbers of the PA-24-260 "C" Models are 24-4783, 24-4804 and up.

STANDARD PAINT CHART

	1958	1959	1960	1961	1962	1963	1964	1965	1966	1967	1968	1969	1970 thru 1972	MFG. NO.	PIPER PART NUMBER QUART	PIPER PART NUMBER GALLON
EXTERIOR																
ENAMEL																
Daytona White	X	X	X	X	X									J-9545	751 700	751 701
Santa Fe Red	X	X	X											H-9150	751 712	751 713
Bahama Blue	X	X	X	X	X									H-9170	751 714	751 715
Hershey Brown	X	X	X											H-9160	751 716	751 717
Montego Green	X	X	X											F-5830	751 718	751 719
Yukon Yellow			X											W-0232	751 720	751 721
Pontiac Red				X	X									W-3665	754 716	754 717
Portland Green				X										W-3558	754 724	754 725
Phoenix Tan				X	X									W-3557	754 718	754 719
Orlando Green					X									W-3680	754 720	754 721
Lakeland Blue					X									W-3554	754 722	754 723
Dakota Black					X									H-6117	751 710	751 711
El Paso Brown					X									W-8433	754 737	754 738
Tampa Green					X									W-8427	754 739	754 740
Newport Blue					X									W-8430	754 741	754 742
ACRYLIC LACQUER																
Daytona White						X								J-9545	752 331	752 332
Phoenix Tan						X								W-3557	752 331	752 332
El Paso Brown (M)						X								W-8433	752 331	752 332
Juneau White							X	X	X	X	X	X	X	B-4243	752 331	752 332
Monterey Maroon (M)						X	X	X	X	X	X	X	X	B-3424	752 331	752 332
Madrid Red							X				X	X	X	B-3534	752 331	752 332
Denver Brown (M)							X	X	X	X	X	X	X	B-3535	752 331	752 332
Tampa Green (M)						X	X	X	X	X	X	X	X	W-8427	752 331	752 332
Newport Blue (M)						X	X	X	X	X	X	X	X	W-8430	752 331	752 332
Beaumont Blue (M)							X	X	X	X	X	X	X	B-3425	752 331	752 332
Bahama Blue						X	X					X	X	H-9170	752 331	752 332
Lakeland Blue							X	X	X	X	X	X	X	W-3554	752 331	752 332
Orlando Green						X	X	X	X	X	X	X	X	W-3680	752 331	752 332
Mocha Brown							X	X	X	X	X	X	X	W-8700	752 331	752 332
Pontiac Red						X	X	X	X	X	X	X	X	W-3665	752 331	752 332
Dakota Black							X	X	X	X	X	X	X	H-6117	752 331	752 332
Polar Gray								X	X	X	X	X	X	Y-6100	752 331	752 332
Reno Gold (M)								X	X	X	X	X	X	B-9916	752 331	752 332
Nassau Turquoise (M)								X	X	X	X	X	X	B-9914	752 331	752 332
Bemini Turquoise (M)								X	X	X	X	X	X	B-9915	752 331	752 332
Ocala Orange											X	X	X	C-2065	752 331	752 332
Dallas Yellow											X	X	X	Y-5783	752 331	752 332
Lincoln Gray											X	X	X	B-7919	752 331	752 332
Las Vegas Gold													X	G-2124	752 331	752 332
Avocado													X	G-2352	752 331	752 332

(M) - Metallic

STANDARD PAINT CHART (cont.)

	1958	1959	1960	1961	1962	1963	1964	1965	1966	1967	1968 thru 1972	MFG. NO.	PIPER PART NUMBER QUART	PIPER PART NUMBER GALLON
INTERIOR														
ENAMEL														
Santa Fe Red	X	X	X			X						H-9150	751 712	751 713
Bahama Blue	X	X	X									H-9170	751 714	751 715
Hershey Brown	X	X	X									H-9160	751 716	751 717
Rapid City Black	X	X	X	X	X	X	X	X	X	X		J-3940	751 696	751 697
Montego Green	X	X	X									F-5830	751 718	751 719
Pensacola Gray				X								W-1462	754 711	754 712
Norfolk Gray				X	X	X						W-1463	754 713	754 714
Rockford White					X	X	X					W-8429	754 731	754 732
Ashland Gray					X	X						W-8428	754 733	754 734
Austin Brown					X	X						W-8432	754 729	754 730
Portland Green						X						W-3558	754 724	754 725
Vista Blue						X						B-3425	754 745	754 746
Mocha Brown							X					W-8700	754 743	754 744
ACRYLIC LACQUER														
Vista Blue (M)							X	X	X	X		B-4860	752 331	752 332
Castilian Red							X				X	B-4862	752 331	752 332
Mocha Brown							X					W-8700	752 331	752 332
Norfolk Gray							X	X	X		X	W-1463	752 331	752 332
Austin Brown							X					W-8432	752 331	752 332
Ashland Gray							X					W-8428	752 331	752 332
Denver Brown (M)								X	X	X		B-3535	752 331	752 332
Mansfield Maroon								X	X	X		4267	752 331	752 332
Dakota Black									X	X	X	H-6117	752 331	752 332
Reno Gold (M)									X	X	X	B-9916	752 331	752 332
Dover White											X	C-6490	752 331	752 332
Biloxi Blue											X	C-6489	752 331	752 332

(M) - Metallic

PIPER AIRCRAFT CORPORATION
PIPER Customer Services

TABLE OF CONTENTS

Figure Number	Figure Title	Page Fig.	Page List
1	View of Complete Airplane	viii	
	SECTION I WING GROUP		
2	Wing Installation	1	2
2A	Flap and Aileron Assembly	7	8
2B	Flap Assembly "250", "260" & "400"	10	11
3	Wing Construction	13	14
3A	Wing Construction	17	18
3B	Rear Spar Section "250", "260" & "400"	25	26
4	Wing Skin	28	29
	SECTION II FUSELAGE GROUP		
5	Complete Fuselage	32	33
5A	Complete Fuselage	37	38
5B	Fuselage Top Section	40	41
5C	Fuselage Top Section	44	45
5D	Fuselage Front Frame Assembly	47	48
5E	Fuselage Rear Frame Assembly	55	56
5F	Fuselage Rear Frame Assembly	61	62
5G	Fuselage Firewall Assembly	65	66
6	Fuselage Aft Section	72	73
7	Instrument Panel Installation	77	78
7A	Instrument Panel Installation	80	81
7B	Instrument Panel Installation	90	91
8	Cockpit Finishing Installation	95	96
8A	Palm Beach Interior "180" & "250"	109	110
8B	Cockpit Finishing Installation	114	115
8C	Window Curtain Installation	119	120
9	Floorboard Installation	122	123
10	Fuselage Enclosure Installation	128	129
10A	Fuselage Enclosure Installation	133	134
11	Cabin Door	136	137
11A	Baggage Compartment Door Assembly	146	147
12	Seats Installation	149	150
12A	Seats Installation	164	165
12B	Vertically Adjustable Seats Installation	170	171
13	Cabin Heat, Defroster and Fresh Air System "180" & "250"	172	173
13A	Cabin Heat, Defroster and Ventilating System "180" & "250"	174	175
13B	Cabin Heat, Defroster and Ventilating System "180" & "250"	177	178
13C	Cabin Heat, Defroster and Ventilating System "260" & "400"	181	182
14	Vacuum Pump Installation (Wet)	186	187
14A	Vacuum System Installation (Dry)	188	189
	SECTION II (cont.) FUSELAGE GROUP		
15	Airspeed, Static, Oil Pressure and Manifold Pressure Lines	192	193
15A	Oxygen System Installation	196	197
15B	Oxygen System Installation	199	200
15C	Oxygen System Installation	202	203
	SECTION III CHASSIS GROUP		
16	Main Landing Gear Installation	205	206
16A	Nose Gear Installation	211	212
17	Landing Gear Retraction System	215	216
17A	Landing Gear Warning Mechanism	219	220
18	Landing Gear Door Installation "180", "250" & "260"	221	222
18A	Landing Gear Door Installation "260" & "400"	223	224
19	Landing Gear Strut Assemblies "180" & "250"	226	227
19A	Landing Gear Strut Assemblies "260" & "400"	231	232
20	Brake System Installation "180" & "250"	236	237
20A	Toe Brake System Installation	239	240
20B	Dual Brake Installation	243	244
21	Brake Assembly	245	246
22	Main Wheel Assembly	248	249
22A	Nose Wheel Assembly	251	252
	SECTION IV TAIL SURFACES GROUP		
23	Tail Surfaces Installation "180", "250" & "260"	253	254
23A	Tail Surfaces Installation "400"	257	258
23B	Stabilator Assembly "180", "250" & "260"	260	261
23C	Stabilator Assembly "400"	262	263
23D	Rudder Assembly "180", "250" & "260"	264	265
23E	Rudder Assembly "400"	267	268
23F	Fin Assembly "180", "250" & "260"	269	270
23G	Fin Assembly "400"	271	272

TABLE OF CONTENTS

Figure Number	Figure Title	Page Fig.	Page List
	SECTION V POWER PLANT GROUP		
24	Power Plant Installation "180"	273	274
24A	Power Plant Installation "250" & "260"	276	277
24B	Power Plant Installation "260"	280	281
24C	Power Plant Installation "400"	283	284
24D	Fuel Injection Installation "250"	286	287
24E	Fuel Injection Installation "260"	290	291
24F	Heated Alternate Air Induction System Installation	294	295
24G	RaJay Turbocharger Components	296	297
25	Engine Cowl Installation "180", "250" & "260"	301	302
25A	Engine Cowl Installation "400"	306	307
25B	Engine Cowl Installation "260"	308	309
26	Engine Baffle Installation "180"	311	312
26A	Engine Baffle Installation "250" & "260"	313	314
26B	Engine Baffle Installation "260"	315	316
26C	Engine Baffle Installation "400"	317	318
27	Engine Exhaust Installation "180"	319	320
27A	Engine Exhaust Installation "250"	321	322
27B	Engine Exhaust Installation "400"	324	325
27C	Engine Exhaust Installation "260"	326	327
27D	Exhaust System Installation	328	329
28	Oil Radiator Installation "180", "250" & "260"	330	331
28A	Oil Radiator Installation "260"	332	333
28B	Oil Radiator Installation "400"	334	335
29	Engine Controls Installation "180", "250" & "260"	336	337
29A	Engine Controls Installation "260"	339	340
29B	Engine Controls Installation "400"	342	343
29C	Propeller Assembly	344	345
	SECTION VI FUEL SYSTEM GROUP		
30	Fuel System Installation "180" & "250"	347	348
30A	Fuel System Installation "180"	350	351
30B	Fuel System Installation "250"	353	354
30C	Auxiliary Fuel System "250" & "260"	357	358
30D	Fuel Primer System Installation "180", "250" & "260"	360	361
31	Fuel Cell Installation "180", "250" & "260"	362	363
31A	Fuel System Installation "400"	365	366
31B	Fuel Cell Installation "400"	369	370
31C	Fuel System Installation "260"	372	373
31D	Fuel System Installation "260"	376	377

Figure Number	Figure Title	Page Fig.	Page List
	SECTION VII ELECTRICAL SYSTEM GROUP		
32	Forward Electrical System Installation	380	381
32A	Aft Electrical System Installation	386	387
32B	Battery Box Installation	390	391
32C	Battery Box Installation	393	394
33	Cockpit Electrical Installation	395	396
33A	Cockpit Electrical Installation	400	401
33B	External Power Supply	402	403
33C	External Power Supply	404	405
33D	Anti-Collision Strobe Lights Installation	406	407
	SECTION VIII CONTROL SYSTEM GROUP		
34	Control Wheel Installation	408	409
35	Rudder Pedal Installation	411	412
36	Control Surfaces Control Systems	413	414
37	Rudder Trim Mechanism Installation	418	419
38	Stabilator Trim Mechanism Installation	421	422
39	Flap Control Mechanism Installation "250" & "260"	425	426
40	Flap Control Mechanism Installation "400"	429	430
	SECTION IX ELECTRONICS GROUP		
41	AutoControl I Installation	432	433
42	AutoControl II Installation	434	435
43	AutoControl III Installation	437	438
44	AltiMatic I Installation	439	440
45	AltiMatic II Installation	441	442
46	AltiMatic III and IIIB Installations	446	447
46A	AltiMatic Pilot IIIB-1	450	451
47	Glide Slope Coupler Installation	453	454
48	Gyro Instruments (3 inch)	455	456
49	Custom Radio Installation	457	458
50	Super Custom Radio Installation	459	460
51	Radio Junction Boxes	462	463
52	Radio Junction Boxes	466	467
52A	Radio Junction Boxes	468	469
53	All Weather Antenna Installation "250" & "400"	470	471
53A	Piper Automatic Locator (ELT) Installation	472	473
54	Piper PM-1 Marker Beacon Installation	474	475
	Radio Installation and Wiring Diagram Drawings		476

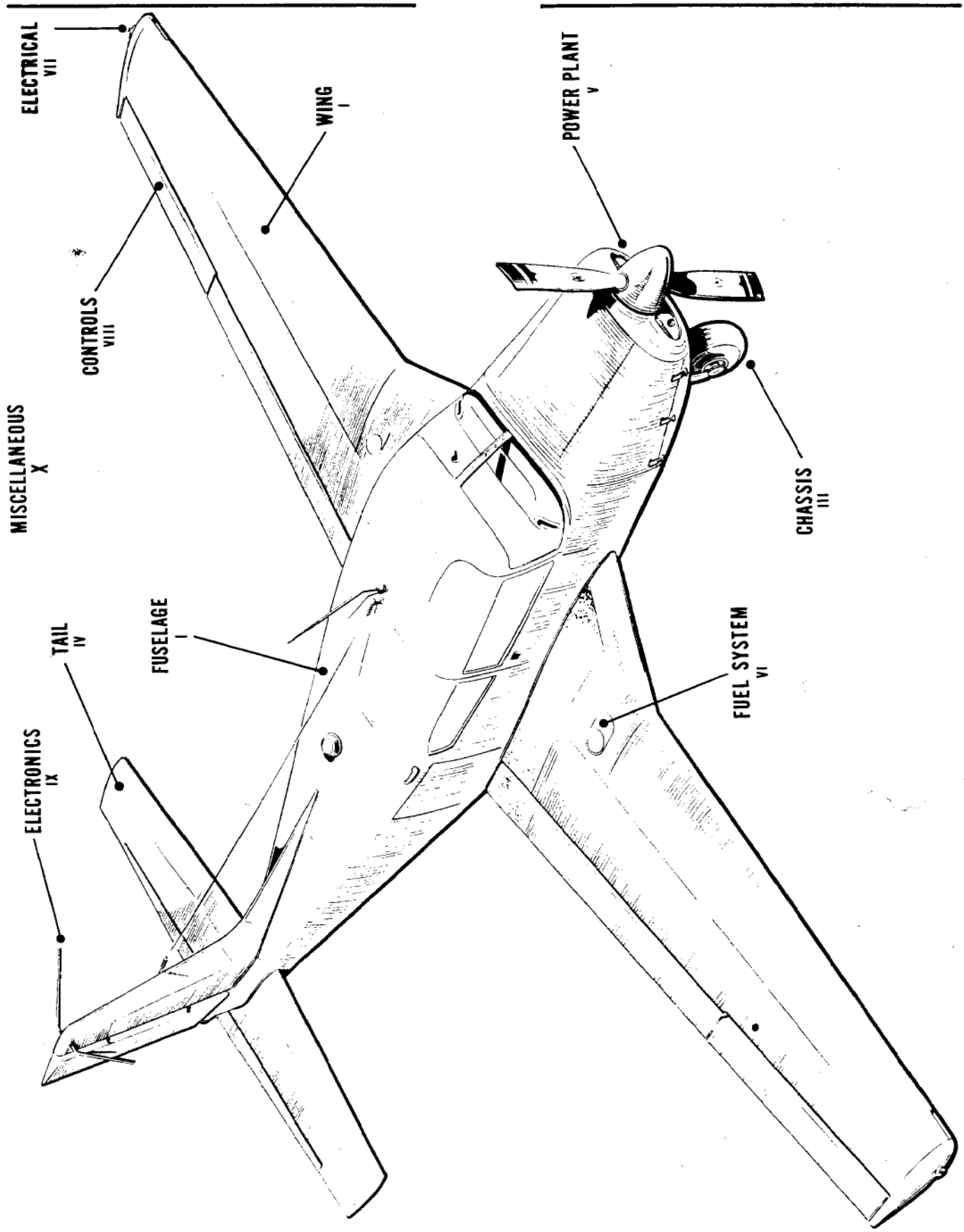

Figure 1. View of Complete Airplane

PILOTEN-SERVICE
Straubing

TABLE OF CONTENTS

Figure Number	Figure Title	Page Fig. List
	SECTION X MISCELLANEOUS GROUP	
	Optional Equipment Kits and Repair Kits	479
	Decals	485
	NUMERICAL INDEX	

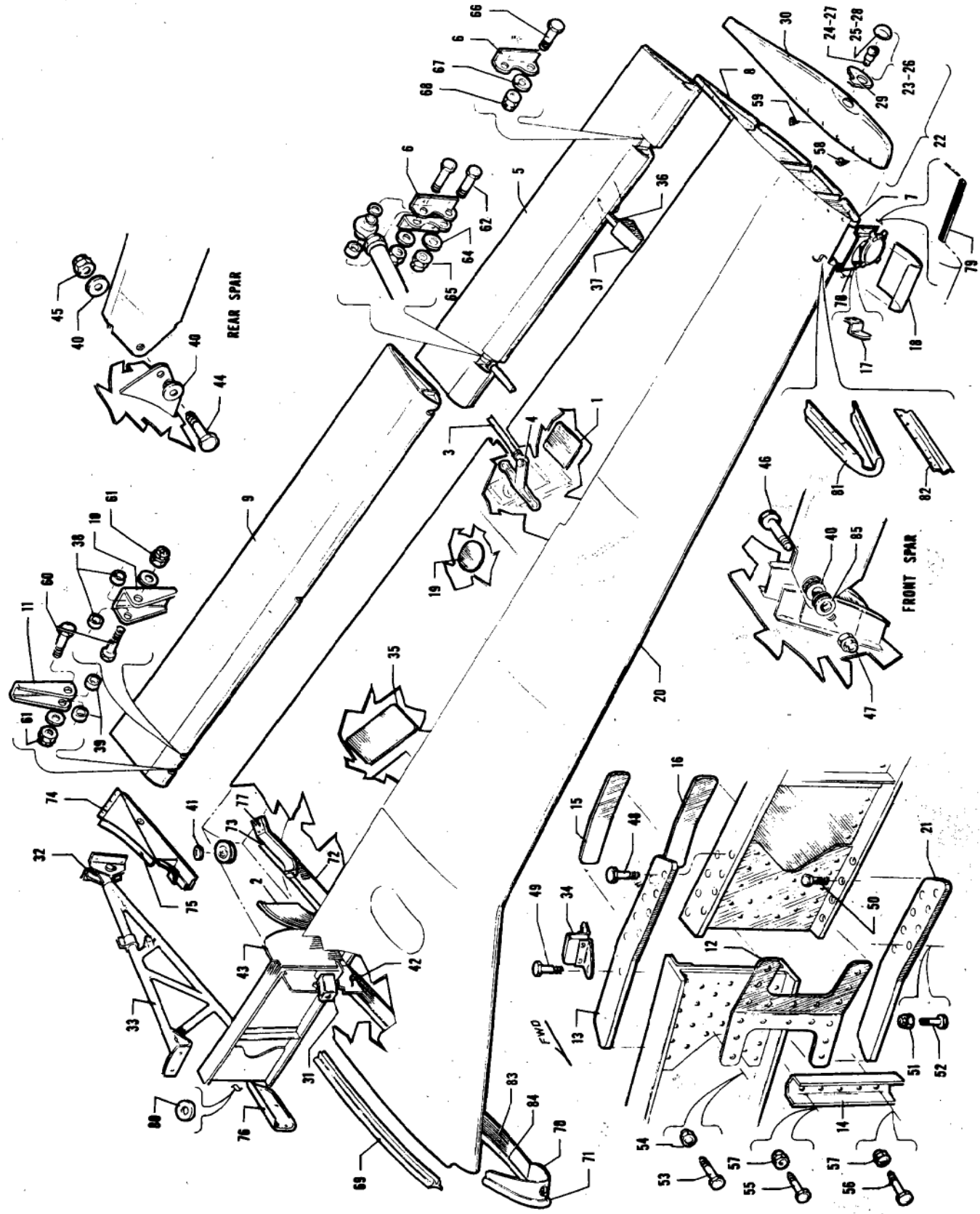

Figure 2. Wing Installation

Figure and Index Number	Part Number	Code	NOMENCLATURE	No. Req.	SERIAL NUMBERS AFFECTED
2-	20948	XY	DRAWING - Wing Installation		24-1 to 24-2843 inclusive
	20958	VXY	DRAWING - Wing Root Fairing Installation		
	24818	Z	DRAWING - Wing Root Fairing Installation		
	23140	Y	DRAWING - Wing Installation		24-2844 and up
	20948	X	DRAWING - Wing Installation		24-2844 and up
	23477	Z	DRAWING - Wing Installation		
	24814	V	DRAWING - Wing Installation		
-1	17316-00		PLATE - Aileron bellcrank access	2	
-2	20489-00		PLATE ASSEMBLY - Main gear wheel well splash, LH	1	
	20489-01		PLATE ASSEMBLY - Main gear wheel well splash, RH	1	
-3	18316-02		ROD ASSEMBLY - Flap control	2	
-4	452 383		BEARING - Rod end (24166-00)	2	
-5	20234-00	AC	AILERON ASSEMBLY - Left (with trim tab)	1	
	20234-28	AV	AILERON ASSEMBLY - Left (with trim tab)	1	24-4718 to 24-4723 inclusive, 24-4725 and up
	20234-01	A	AILERON ASSEMBLY - Right (less trim tab)	1	24-1 to 24-4548 inclusive, 26-2 and up
	20234-27	AV	AILERON ASSEMBLY - Right (with trim tab)	1	24-4549 to 24-4717 inclusive, 24-4724
	20234-29	AV	AILERON ASSEMBLY - Right (with trim tab)	1	24-4718 to 24-4723 inclusive, 24-4725 and up
-6	20211-00		BRACKET - Aileron hinge	3	
-7	20272-06		RIB - Wing nose (Sta. 211) LH	1	
	20272-07		RIB - Wing nose (Sta. 211) RH	1	
-8	20274-08		RIB - Wing trailing edge (Sta. 211) LH	1	
	20274-09		RIB - Wing trailing edge (Sta. 211) RH	1	
-9	20304-00	AX	FLAP ASSEMBLY - Left	1	24-1 to 24-38 inclusive, 24-40 to 24-63 inclusive, 24-65 and 24-72
	20304-01	AX	FLAP ASSEMBLY - Right	1	24-1 to 24-38 inclusive, 24-40 to 24-63 inclusive, 24-65 and 24-72
	20304-42	AXY	FLAP ASSEMBLY - Left	1	24-39, 24-64, 24-66 to 24-71 inclusive, 24-73 to 24-2843 incl.
	20304-43	AXY	FLAP ASSEMBLY - Right	1	24-39, 24-64, 24-66 to 24-71 inclusive, 24-73 to 24-2843 incl.
	22699-00	BVY	FLAP ASSEMBLY - Left	1	24-2844 to 24-4999 inclusive
	27247-02	BVY	FLAP ASSEMBLY - Left	1	24-5000 and up
	22699-01	BVY	FLAP ASSEMBLY - Right	1	24-2844 and up
	20304-42	AX	FLAP ASSEMBLY - Left	1	24-2844 and up
	20304-43	AX	FLAP ASSEMBLY - Right	1	24-2844 and up
	27247-03	BZ	FLAP ASSEMBLY - Left	1	
	22699-31	BZ	FLAP ASSEMBLY - Right	1	

A - See Figure 2A for component parts.
B - See Figure 2B for component parts.
C - Used on PA-24-260 with serial numbers 24-3642, 24-4000 to 24-4717 and 24-4724. Also used on PA-24-180, PA-24-250 and PA-24-400.
V - Used on PA-24-260 airplanes only.
X - Used on PA-24-180 airplanes only.
Y - Used on PA-24-250 airplanes only.
Z - Used on PA-24-400 airplanes only.

Figure and Index Number	Part Number	Code	NOMENCLATURE	No. Req.	SERIAL NUMBERS AFFECTED
2-10	20277-00		BRACKET - Flap control rod	1	
-11	20278-00	X	HINGE - Flap	3	24-1 to 24-38 inclusive, 24-40 to 24-63 inclusive, 24-65 and 24-72
	20278-02	XY	HINGE - Flap	3	24-39, 24-64, 24-66 to 24-71 inclusive, 24-73 to 24-2843
-12	20311-00		PLATE - Main spar attachment	1	
-13	20313-00		PLATE - Main spar upper attachment	1	
-14	20314-00		CHANNEL - Main spar attachment	1	
-15	20315-00		STRAP - Main spar attachment, upper	1	
-16	20315-02		STRAP - Main spar attachment, lower	1	
-17	20347-02		CLAMP - Landing light mounting	8	
-18	20348-00		WINDOW - Landing light, LH	1	
	20348-01		WINDOW - Landing light, RH	1	
-19	20370-00		PLATE - Access hole cover	2	
-20	22181-00	BCX	PANEL ASSEMBLY - Wing, LH	1	
	22181-01	BCX	PANEL ASSEMBLY - Wing, RH	1	
	22181-00	BCDY	PANEL ASSEMBLY - Wing, LH	1	24-105 to 24-2843 inclusive
	22181-01	BCDY	PANEL ASSEMBLY - Wing, RH	1	24-105 to 24-2843 inclusive
	22181-02	BEY	PANEL ASSEMBLY - Wing, LH	1	24-2299 to 24-2843 inclusive
	22181-03	BEY	PANEL ASSEMBLY - Wing, RH	1	24-2299 to 24-2843 inclusive
	22701-00	BY	PANEL ASSEMBLY - Wing, LH	1	24-2844 and up
	22701-01	BY	PANEL ASSEMBLY - Wing, RH	1	24-2844 and up
	22700-00	BZ	PANEL ASSEMBLY - Wing, LH	1	
	22700-01	BZ	PANEL ASSEMBLY - Wing, RH	1	
	24723-00	AB	PANEL ASSEMBLY - Wing, LH	1	
	24723-01	AB	PANEL ASSEMBLY - Wing, RH	1	
	24723-02	BV	PANEL ASSEMBLY - Wing, LH	1	24-4247, 24-4300 and up
	24723-03	BV	PANEL ASSEMBLY - Wing, RH	1	24-4247, 24-4300 and up
-21	20433-00		PLATE - Main spar lower attachment	1	

A - Used on PA-24-260 with serial numbers 24-3642, 24-4000 to 24-4246 inclusive, 24-4248 to 24-4299 inclusive.
B - See Figures 3, 3A and 4 for component parts.
C - Wing panel 22181-00 replaces wing panel 20377-00 and wing panel 22181-01 replaces 20377-01. Check part number plate, located in wheel well, before ordering component parts.
D - Used when auxiliary fuel cells are not installed.
E - Used when auxiliary fuel cells are installed.
V - Used on PA-24-260 airplanes only.
X - Used on PA-24-180 airplanes only.
Y - Used on PA-24-250 airplanes only.
Z - Used on PA-24-400 airplanes only.

Figure and Index Number	Part Number	Code	NOMENCLATURE	No. Req.	SERIAL NUMBERS AFFECTED
2-22	20447-04	AXYZ	TIP ASSEMBLY - Wing, LH (with navigation light)	1	
	20447-05	AXYZ	TIP ASSEMBLY - Wing, RH (with navigation light)	1	
	20447-08	BV	TIP ASSEMBLY - Wing, LH (with navigation light)	1	
	20447-07	BV	TIP ASSEMBLY - Wing, RH (with navigation light)	1	
-23	472 666	B	LIGHT - Navigation, green, right wing	1	
-24	751 381	B	BULB - (#1512)	1	
-25	751 201	B	LENS - Green	1	
-26	472 665	B	LIGHT - Navigation, red, left wing	1	
-27	751 381	B	BULB - (#1512)	1	
-28	751 202	B	LENS - Red	1	
-29	20587-02	B	REFLECTOR - Navigation light	1	
-30	21552-00	AXYZ	TIP ASSEMBLY - Left wing	1	
	21552-01	AXYZ	TIP ASSEMBLY - Right wing	1	
	24870-00	BV	TIP ASSEMBLY - Left wing	1	
	24870-01	BV	TIP ASSEMBLY - Right wing	1	
-31	20476-00		FITTING - Main spar bottom attachment, LH	1	
	20476-01		FITTING - Main spar bottom attachment, RH	1	
-32	20527-00		ANGLE - Main spar center support attachment, LH	1	
	20527-01		ANGLE - Main spar center support attachment, RH	1	
-33	20563-00	XY	SUPPORT ASSEMBLY - Main spar center	1	24-1 to 24-2843 inclusive
	20563-00	X	SUPPORT ASSEMBLY - Main spar center	1	24-2844 and up
	22697-00	Y	SUPPORT ASSEMBLY - Main spar center	1	24-2844 and up
	24590-00	Z	SUPPORT ASSEMBLY - Main spar center	1	26-2 to 26-124 inclusive
	24590-11	Z	SUPPORT ASSEMBLY - Main spar center	1	26-125 and up
	22697-07	CV	SUPPORT ASSEMBLY - Main spar center	1	
	22697-10	V	SUPPORT ASSEMBLY - Main spar center	1	24-4247, 24-4300 and up
-34	20593-00	CXYZ	SUPPORT ASSEMBLY - Rear seat	1	
-35	20632-00	VXY	PLATE - Wing access	2	
	23474-00	Z	PLATE - Wing access	2	
-36	20720-00		ARM - Aileron balance	2	
-37	20721-00		WEIGHT - Aileron balance	2	
-38	80012-22	XY	BUSHING - Flap control rod attachment, spacer	4	24-1 to 24-2843 inclusive
	80012-22	X	BUSHING - Flap control rod attachment, spacer	4	24-2844 and up
-39	80012-94		BUSHING - Hinge spacer	2	
-40	81342-05		WASHER - Spar attachment	6	
-41	80122-25		WASHER - Aileron pulley spacer	1	
-42	21919-00		SEAL - Main spar, front, left	1	
	21919-01		SEAL - Main spar, front, right	1	
	21919-08	D	SEAL - Main spar, front, left	1	
	21919-09	D	SEAL - Main spar, front, right	1	
-43	21918-00		SEAL - Main spar, rear, left	1	
	21918-01		SEAL - Main spar, rear, right	1	

A - Navigation light must be grounded to wing structure when replacing metal tip with plastic tip.
B - See Figure 33D if Anti-Collision Wing Tip Strobe Light is installed.
C - Used on PA-24-260 with serial numbers 24-3642, 24-4000 to 24-4246 inclusive, 24-4248 to 24-4299 inclusive.
D - Used when auxiliary fuel system is installed.
V - Used on PA-24-260 airplanes only.
X - Used on PA-24-180 airplanes only.
Y - Used on PA-24-250 airplanes only.
Z - Used on PA-24-400 airplanes only.

Figure and Index Number	Part Number	Code	NOMENCLATURE	No. Req.	SERIAL NUMBERS AFFECTED
2-44	402 350		BOLT - Rear spar attachment (AN176-10A)	2	
-45	404 890		NUT - (AN365-624)	2	
-46	401 393		BOLT - Front spar attachment (AN6-12A)	2	
-47	404 890		NUT - (AN365-624)	2	
-48	401 393		BOLT - Main spar attachment, top (AN6-12A)	15	
-49	401 394		BOLT - Main spar attachment, top (AN6-13A)	1	
-50	401 393		BOLT - Main spar attachment, bottom (AN6-12A)	14	
-51	404 890		NUT - (AN365-624)	32	
-52	401 396		BOLT - Main spar attachment, bottom (AN6-15A)	2	
-53	401 189		BOLT - Main spar attachment, center (AN5-11A)	8	
-54	404 889		NUT - (AN365-524)	8	
-55	400 440		BOLT - Main spar attachment, center (AN3-6A)	6	
-56	410 047		SCREW - Main spar attachment, center (AN509-10-18)	4	
-57	404 887		NUT - (AN365-1032)	10	
-58	419 948		SCREW - Wing tip attachment, front (#6 x 1/2" L truss)	8	
-59	419 946		SCREW - Wing tip attachment (#6 x 3/8" L truss)	22	
-60	400 008	ABX	BOLT - Flap hinge and control rod attachment (AN4-13A)	8	
-61	404 888	ABX	NUT - (MS20365-428C)	8	
-62	401 312		BOLT - Inboard aileron hinge and control rod (AN4-12A)	4	
-63	407 585		WASHER - (AN960-416L)	2	
-64	407 565		WASHER - (AN960-416)	2	
-65	404 888		NUT - (AN365-428)	4	
-66	401 311		BOLT - Outboard aileron hinge (AN4-11A)	2	
-67	407 585		WASHER - (AN960-416L)	2	
-68	404 888		NUT - (AN365-428)	2	
-69	20666-02		MOULDING - Wing root	2	
-70	20983-00	VXY	FAIRING ASSEMBLY - Wing root, front, left	1	
	20983-01	VXY	FAIRING ASSEMBLY - Wing root, front, right	1	
	24771-00	Z	FAIRING ASSEMBLY - Wing root, front, left	1	
	24771-01	Z	FAIRING ASSEMBLY - Wing root, front, right	1	
-71	187 514	VXY	MOULDING - Extruded	5'	
	187 513	Z	MOULDING - Extruded	5'	
-72	20984-00		FAIRING ASSEMBLY - Wing root, lower, left	1	
	20984-01		FAIRING ASSEMBLY - Wing root, lower, right	1	
-73	187 514		MOULDING	3'	
-74	21267-00		FAIRING ASSEMBLY - Flap, left	1	
	21267-01		FAIRING ASSEMBLY - Flap, right	1	
-75	187 514		MOULDING	3'	
-76	20535-00		PLATE - Fuselage cover, left	1	
	20535-01		PLATE - Fuselage cover, right	1	

A - See Figure 39 for information on PA-24-250 serial number 24-2844 and up, and PA-24-260.
B - See Figure 40 for information on PA-24-400.
V - Used on PA-24-260 airplanes only.
X - Used on PA-24-180 airplanes only.
Y - Used on PA-24-250 airplanes only.
Z - Used on PA-24-400 airplanes only.

Figure and Index Number	Part Number	Code	NOMENCLATURE	No. Req.	SERIAL NUMBERS AFFECTED
2-77	21289-02	XY	STRAP ASSEMBLY - Wheel anti-rotator	1	
-78	20345-00	XY	BRACKET - Landing light	2	24-1 to 24-2843 inclusive
	20345-02		BRACKET - Landing light	2	24-2844 and up, 26-2 and up
-79	19795-00	XY	EXTRUSION - Rubber	3'	24-1 to 24-2843 inclusive
-80	80122-99		SHIMS - (.091)	2	
-81	20358-00		STRIP - Landing light window mounting, left (15-3/4")	1	
	20358-01		STRIP - Landing light window mounting, right (15-3/4")	1	
-82	20359-00		STRIP - Landing light window mounting (6-11/16")	2	
-83	24783-00	Z	FAIRING ASSEMBLY - Wing root, lower front, left	1	
	24783-01	Z	FAIRING ASSEMBLY - Wing root, lower front, right	1	
-84	187 514	Z	MOULDING	4'	
-85	19513-94		WASHER - Front spar attachment	2	

X - Used on PA-24-180 airplanes only.
Y - Used on PA-24-250 airplanes only.
Z - Used on PA-24-400 airplanes only.

PILOTEN-SERVICE
Straubing LBA II-A

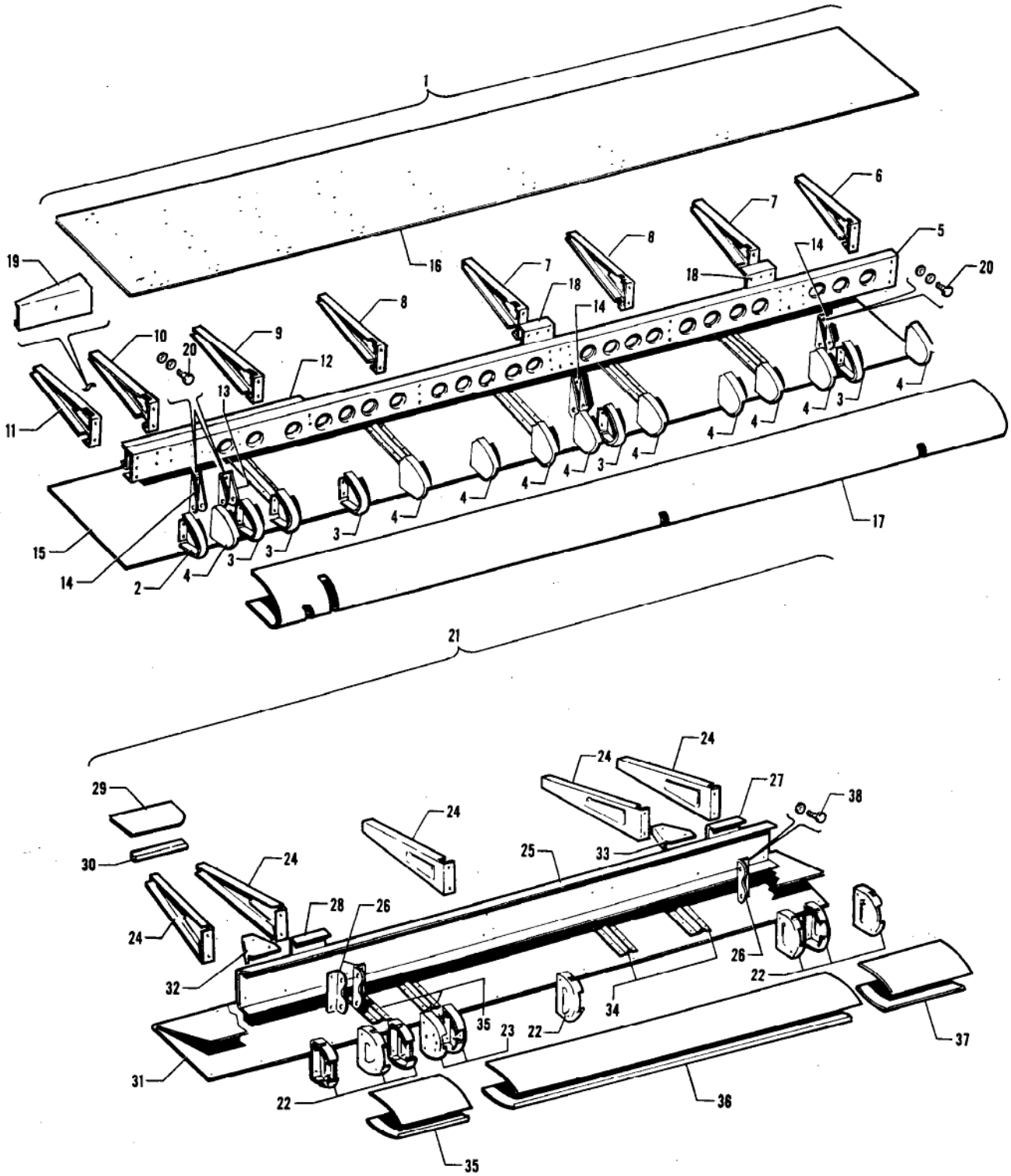

Figure 2A. Flap and Aileron Assembly

Figure and Index Number	Part Number	Code	NOMENCLATURE	No. Req.	SERIAL NUMBERS AFFECTED
2A-	20304	A	DRAWING - Flap Assembly		
	20234		DRAWING - Aileron Assembly		
-1	20304-00	X	FLAP ASSEMBLY - Left	1	24-1 to 24-38 inclusive, 24-40 to 24-63 inclusive, 24-65 and 24-72
	20304-01	X	FLAP ASSEMBLY - Right	1	24-1 to 24-38 inclusive, 24-40 to 24-63 inclusive, 24-65 and 24-72
	20304-42	XY	FLAP ASSEMBLY - Left	1	24-39, 24-64, 24-66 to 24-71 inclusive, 24-73 to 24-2843
	20304-43	XY	FLAP ASSEMBLY - Right	1	24-39, 24-64, 24-66 to 24-71 inclusive, 24-73 to 24-2843
	20304-42	AX	FLAP ASSEMBLY - Left	1	24-2844 and up
	20304-43	AX	FLAP ASSEMBLY - Right	1	24-2844 and up
-2	20304-14		RIB - Flap, nose, left	1	
	20304-15		RIB - Flap, nose, right	1	
-3	20304-13		RIB - Flap, nose, left	5	
	20304-12		RIB - Flap, nose, right	5	
-4	20304-12		RIB - Flap, nose, left	10	
	20304-13		RIB - Flap, nose, right	10	
-5	20260-00		SPAR - Flap	1	
-6	20304-36		RIB - Flap	1	
-7	20304-04		RIB ASSEMBLY - Flap	2	
-8	20304-02		RIB - Flap	2	
-9	20304-06		RIB - Flap	1	
-10	20304-08		RIB ASSEMBLY - Flap	1	
-11	20304-10		RIB - Flap	1	
-12	20304-20		PLATE - Reinforcement	1	
-13	20277-00		BRACKET - Flap control rod	1	
-14	20278-00		HINGE - Flap	3	24-1 to 24-38 inclusive, 24-40 to 24-63 inclusive, 24-65 and 24-72
	20278-02		HINGE - Flap	3	24-39, 24-64, 24-66 to 24-71 inclusive, 24-73 and up
-15	20304-38		SKIN ASSEMBLY - Flap, bottom, left	1	
	20304-37		SKIN ASSEMBLY - Flap, bottom inboard, right	1	
	20304-41		SKIN ASSEMBLY - Flap, bottom outboard, right	1	
-16	20304-40		SKIN ASSEMBLY - Flap, top, left	1	
	20304-39		SKIN ASSEMBLY - Flap, top, right	1	
-17	20304-18		SKIN - Left	1	
	20304-19		SKIN - Right	1	
-18	20304-26		PLATE - Reinforcement	2	
-19	20279-00		CHANNEL ASSEMBLY - Flap reinforcement	1	
-20	401 266		BOLT - (AN3-5A) Hinge attachment	8	
	407 564		WASHER - (AN960-10) Hinge attachment	8	
	407 584		WASHER - (AN960-10L) Hinge attachment	4	

A - See Figure 2B for flap assembly on PA-24-250 airplanes with serial numbers 24-2844 and up, PA-24-400 and PA-24-260.
X - Used on PA-24-180 airplanes only.
Y - Used on PA-24-250 airplanes only.

Figure and Index Number	Part Number	Code	NOMENCLATURE	No. Req.	SERIAL NUMBERS AFFECTED
2A-21	20234-00	A	AILERON ASSEMBLY - Left (with trim tab)	1	
	20234-28	V	AILERON ASSEMBLY - Left (with trim tab)	1	24-4718 to 24-4723 inclusive, 24-4725 and up
	20234-01		AILERON ASSEMBLY - Right (less trim tab)	1	24-1 to 24-4548 inclusive 26-2 and up
	20234-27	V	AILERON ASSEMBLY - Right (with trim tab)	1	24-4549 to 24-4717 inclusive, 24-4724
	20234-29	V	AILERON ASSEMBLY - Right (with trim tab)	1	24-4718 to 24-4723 inclusive, 24-4725 and up
-22	20234-17		RIB - Aileron, nose	7	
-23	20234-31		BULKHEAD ASSEMBLY - Aileron, nose	2	24-1 to 24-4717 inclusive, 26-2 and up
	20234-30		BULKHEAD ASSEMBLY - Aileron, nose	2	24-4718 and up
-24	20234-16		RIB - Aileron	5	
-25	20213-00		SPAR - Aileron	1	
-26	20211-00		BRACKET - Aileron hinge	3	
-27	20234-14		PLATE ASSEMBLY - Aileron reinforcement	1	
-28	20234-15		PLATE ASSEMBLY - Aileron reinforcement	1	
-29	21265-00		TAB - Aileron trim	1	
-30	21270-00		STRIP - Aileron reinforcement	1	
-31	20234-24		SKIN ASSEMBLY - Left	1	
	20234-19		SKIN ASSEMBLY - Right	1	
-32	20234-04		GUSSET - Left aileron, top, inboard and right aileron, bottom, inboard	1	
	20234-05		GUSSET - Left aileron, bottom, inboard and right aileron, top, inboard	1	
-33	20234-02		GUSSET - Left aileron, top, outboard and right aileron, bottom, outboard	1	
	20234-03		GUSSET - Left aileron, bottom, outboard and right aileron, top, outboard	1	
-34	20234-18		CHANNEL - Stiffener	8	
-35	20234-06		SKIN - Top	1	
	20234-07		SKIN - Bottom	1	
-36	20234-10		SKIN - Top	1	
	20234-11		SKIN - Bottom	1	
-37	20234-08		SKIN - Top	1	
	20234-09		SKIN - Bottom	1	
-38	400 438		BOLT - (AN3-4A) Hinge attachment	6	
	407 584		WASHER - (AN960-10L) Hinge attachment	6	

A - Used on PA-24-260 with serial numbers 24-3642, 24-4000 to 24-4717 and 24-4724. Also used on PA-24-180, PA-24-250 and PA-24-400.
V - Used on PA-24-260 airplanes only.

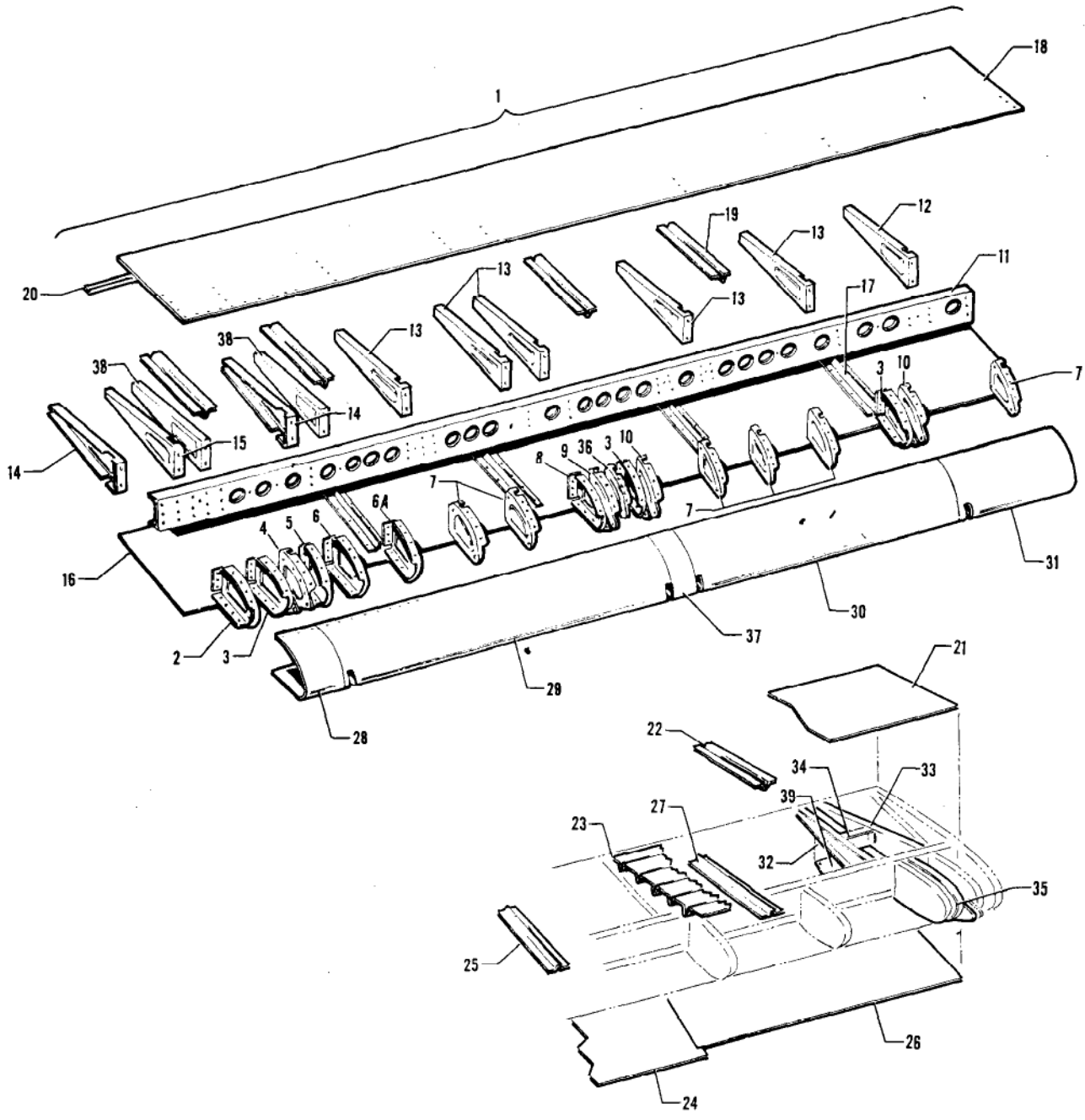

Figure 2B. Flap Assembly - PA-24-250, PA-24-400 and PA-24-260

Figure and Index Number	Part Number	Code	NOMENCLATURE	No. Req.	SERIAL NUMBERS AFFECTED
2B-1	22699-00	VY	FLAP ASSEMBLY - Left	1	24-2844 to 24-4999 inclusive
	27247-02	VY	FLAP ASSEMBLY - Left	1	24-5000 and up
	22699-01	VY	FLAP ASSEMBLY - Right	1	
	27247-03	Z	FLAP ASSEMBLY - Left	1	
	22699-31	Z	FLAP ASSEMBLY - Right	1	
-2	22654-00		RIB - Flap nose, inboard, left	1	
	22654-01		RIB - Flap nose, inboard, right	1	
-3	22705-02		RIB ASSEMBLY - Flap, nose, left	3	
	22705-03		RIB ASSEMBLY - Flap, nose, right	3	
-4	22705-05	VY	RIB ASSEMBLY - Flap, nose, left	1	
	22705-06	Z	RIB ASSEMBLY - Flap, nose, left	1	
	22659-02		RIB ASSEMBLY - Flap, nose, right	1	
-5	22659-04	VY	RIB ASSEMBLY - Flap, nose, left	1	
	22659-03		RIB ASSEMBLY - Flap, nose, right	1	
-6	22659-07		RIB ASSEMBLY - Flap, nose	1	
-6a	22659-06		RIB ASSEMBLY - Flap, nose, left	1	
	22659-07		RIB ASSEMBLY - Flap, nose, right	1	
-7	22659-07		RIB ASSEMBLY - Flap, nose, left	6	
	22659-06		RIB ASSEMBLY - Flap, nose, right	6	
-8	22704-00		RIB ASSEMBLY - Flap, nose, left	1	
	22704-01		RIB ASSEMBLY - Flap, nose, right	1	
-9	22704-01		RIB ASSEMBLY - Flap, nose, left	1	
	22704-00		RIB ASSEMBLY - Flap, nose, right	1	
-10	22705-03		RIB ASSEMBLY - Flap, nose, left	2	
	22705-02		RIB ASSEMBLY - Flap, nose, right	2	
-11	22683-00	VY	SPAR - Flap	1	
	22683-02	Z	SPAR - Flap	1	
-12	22669-00		RIB - Flap	1	
-13	22668-02		RIB - Flap	5	
-14	22667-00		RIB - Flap	2	
-15	22668-03		RIB - Flap, left	1	
-16	27247-07		SKIN ASSEMBLY - Flap, bottom, left	1	
-17	22714-00		STIFFENER - Bottom, left	4	
	22714-00		STIFFENER - Bottom, left, outboard	2	
-18	27247-06		SKIN ASSEMBLY - Flap, top, left	1	
-19	22714-00		STIFFENER - Top, left	4	
	22714-00		STIFFENER - Top, left, outboard	2	
-20	20304-30		STRIP - Edge stiffener	1	
-21	22699-02		SKIN ASSEMBLY - Flap, top, right	1	
-22	22714-00		STIFFENER - Top, right	3	
-23	22699-03		PLATE - Reinforcement, right	1	
-24	22699-17		SKIN ASSEMBLY - Flap, bottom outboard, right	1	
-25	22714-00		STIFFENER - Bottom outboard, right	3	
-26	22699-19		SKIN ASSEMBLY - Flap, bottom inboard, right	1	
-27	22726-00		STIFFENER - Bottom inboard, right	1	
-28	22699-14		SKIN - Inboard, left	1	
	22699-15		SKIN - Inboard, right	1	

V - Used on PA-24-260 airplanes only.
Y - Used on PA-24-250 airplanes only.
Z - Used on PA-24-400 airplanes only.

When ordering, always specify Part Number, Description and Serial Number of Aircraft

Figure and Index Number	Part Number	Code	NOMENCLATURE	No. Req.	SERIAL NUMBERS AFFECTED
2B-29	22699-12	VY	SKIN - Center, inboard, left	1	
	22699-32	Z	SKIN - Center, inboard, left	1	
	22699-13	VY	SKIN - Center, inboard, right	1	
	22699-33	Z	SKIN - Center, inboard, right	1	
-30	22699-10		SKIN - Center, outboard, left	1	
	22699-11		SKIN - Center, outboard, right	1	
-31	22699-08		SKIN - Outboard, left	1	
	22699-09		SKIN - Outboard, right	1	
-32	22668-07		RIB ASSEMBLY - Right	1	
-33	22668-06		RIB ASSEMBLY - Right	1	
-34	23196-00		BRACKET ASSEMBLY - Right	1	
-35	22699-29		RIB ASSEMBLY - Right	1	
-36	22659-07	Z	RIB ASSEMBLY - Flap, nose, left	1	
	22659-06	Z	RIB ASSEMBLY - Flap, nose, right	1	
-37	22699-36	Z	SKIN - Center, nose, left	1	
	22699-37	Z	SKIN - Center, nose, right	1	
-38	22668-02	A	RIB - Flap	2	
-39	23087-00		PLATE - Flap access	1	

A - Used when 27247-02 or 27247-03 Flap Assembly is installed.
V - Used on PA-24-260 airplanes only.
Y - Used on PA-24-250 airplanes only.
Z - Used on PA-24-400 airplanes only.

Figure and Index Number	Part Number	Code	NOMENCLATURE	No. Req.	SERIAL NUMBERS AFFECTED
3-18	20282-03		RIB ASSEMBLY - Nose, right, Sta. 143	1	
	20282-00		RIB ASSEMBLY - Nose, left, Sta. 143	1	
-19	20310-03		RIB ASSEMBLY - Nose, right, Sta. 169	1	
	20310-02		RIB ASSEMBLY - Nose, left, Sta. 169	1	
-20	20275-07		RIB ASSEMBLY - Nose, right, Sta. 197	1	
	20275-06		RIB ASSEMBLY - Nose, left, Sta. 197	1	
-21	20272-11		RIB ASSEMBLY - Nose, right, Sta. 211	1	
	20272-10		RIB ASSEMBLY - Nose, left, Sta. 211	1	
-22	751 228		ANGLE - Stringer (6 ft. section)		
-23	20266-01		SPAR ASSEMBLY - Rear, right	1	
	20266-00		SPAR ASSEMBLY - Rear, left	1	
-23a	80022-92		BUSHING	1	
-24	20274-07		RIB ASSEMBLY - Main, right, Sta. 211	1	
	20274-06		RIB ASSEMBLY - Main, left, Sta. 211	1	
-25	20275-05		RIB ASSEMBLY - Main, right, Sta. 197	1	
	20275-04		RIB ASSEMBLY - Main, left, Sta. 197	1	
-26	20310-05		RIB ASSEMBLY - Main, right, Sta. 169	1	
	20310-04		RIB ASSEMBLY - Main, left, Sta. 169	1	
-27	20283-01		RIB ASSEMBLY - Main, right, Sta. 143	1	
	20283-00		RIB ASSEMBLY - Main, left, Sta. 143	1	
-28	20288-01		BULKHEAD ASSEMBLY - Rear spar, right, Sta. 197	1	
	20288-00		BULKHEAD ASSEMBLY - Rear spar, left, Sta. 197	1	
-29	20262-01		BULKHEAD ASSEMBLY - Rear spar, right, Sta. 169	1	
	20262-00		BULKHEAD ASSEMBLY - Rear spar, left, Sta. 169	1	
-30	20288-01		BULKHEAD ASSEMBLY - Rear spar, right, Sta. 143	1	
	20288-00		BULKHEAD ASSEMBLY - Rear spar, left, Sta. 143	1	
-31	20337-03		BULKHEAD ASSEMBLY - Rear spar, right, Sta. 133	1	
	20337-02		BULKHEAD ASSEMBLY - Rear spar, left, Sta. 133	1	
-32	20337-04		BULKHEAD ASSEMBLY - Rear spar, right, Sta. 120, 97, 78, 68, 33	5	
	20337-05		BULKHEAD ASSEMBLY - Rear spar, left, Sta. 120, 97, 78, 68, 33	5	
-33	20318-01		RIB ASSEMBLY - Main, right, Sta. 135	1	
	20318-00		RIB ASSEMBLY - Main, left, Sta. 135	1	
-34	20269-01		RIB ASSEMBLY - Main, right, Sta. 120	1	
	20269-00		RIB ASSEMBLY - Main, left, Sta. 120	1	
-35	20263-05		RIB ASSEMBLY - Main, right, Sta. 97	1	
	20263-04		RIB ASSEMBLY - Main, left, Sta. 97	1	
-36	20354-01		RIB ASSEMBLY - Main, right, Sta. 78	1	
	20354-00		RIB ASSEMBLY - Main, left, Sta. 78	1	
-37	20308-01		RIB ASSEMBLY - Main, right, Sta. 68	1	
	20308-00		RIB ASSEMBLY - Main, left, Sta. 68	1	
-38	20351-01		RIB ASSEMBLY - Main, right, Sta. 55	1	
	20351-00		RIB ASSEMBLY - Main, left, Sta. 55	1	
-39	20320-01		RIB ASSEMBLY - Main, right, Sta. 47	1	
	20320-00		RIB ASSEMBLY - Main, left, Sta. 47	1	
-40	20321-01		RIB ASSEMBLY - Main, right, Sta. 33	1	
	20321-00		RIB ASSEMBLY - Main, left, Sta. 33	1	
-41	20319-01		RIB ASSEMBLY - Main, right, Sta. 25	1	
	20319-00		RIB ASSEMBLY - Main, left, Sta. 25	1	
-42	20337-08		BULKHEAD ASSEMBLY - Rear spar, right, Sta. 55	1	
	20337-09		BULKHEAD ASSEMBLY - Rear spar, left, Sta. 55	1	
-43	20337-07		BULKHEAD ASSEMBLY - Rear spar, right, Sta. 47	1	
	20337-06		BULKHEAD ASSEMBLY - Rear spar, left, Sta. 47	1	
-44	20294-00		BRACKET - Aileron hinge, outboard	1	
-45	452 345		BEARING - CS2170	1	

Figure and Index Number	Part Number	Code	NOMENCLATURE	No. Req.	SERIAL NUMBERS AFFECTED
3-46	20293-00		BRACKET - Aileron hinge, inboard	1	
-47	452 345		BEARING - CS2170	1	
-48	20302-00		BRACKET ASSEMBLY - Flap hinge	2	
-49	452 345		BEARING - CS2170	1	
-50	20300-00		PLATE - Flap hinge reinforcement	1	
-51	20240-01		BRACKET ASSEMBLY - Flap hinge, inboard, right	1	
	20240-00		BRACKET ASSEMBLY - Flap hinge, inboard, left	1	
-52	452 345		BEARING - CS2170	1	
-53	20289-01		BRACKET - Aileron pulley, right	1	
	20289-00		BRACKET - Aileron pulley, left	1	
-54	20289-00		BRACKET - Aileron pulley, right	1	
	20289-01		BRACKET - Aileron pulley, left	1	
-55	20309-01		BRACKET ASSEMBLY - Aileron bellcrank, right	1	
	20309-00		BRACKET ASSEMBLY - Aileron bellcrank, left	1	
-56	20656-00		BRACKET ASSEMBLY - Flap control selector, left top, right bottom	1	24-1 to 24-38 inclusive, 24-40 to 24-386 inclusive
-57	20656-01		BRACKET ASSEMBLY - Flap control selector, left bottom, right top	1	24-1 to 24-38 inclusive, 24-40 to 24-386 inclusive
	20656-06		BRACKET ASSEMBLY - Flap control selector, left top, right bottom	1	24-39, 24-387 and up
	20656-07		BRACKET ASSEMBLY - Flap control selector, left bottom, right top	1	24-39, 24-387 and up
-57	20287-00		LINER - Fuel cell outboard, left	1	
	20287-01		LINER - Fuel cell outboard, right	1	
-58	20286-04		LINER - Fuel cell, left, outboard	1	
	20286-05		LINER - Fuel cell, right, outboard	1	
	20286-02		LINER - Fuel cell, left, inboard	1	
	20286-03		LINER - Fuel cell, right, inboard	1	
-59	20346-00		BRACKET - Landing light support	1	
-60	20360-34		BULKHEAD ASSEMBLY - LH	1	
	20360-35		BULKHEAD ASSEMBLY - RH	1	
-61	20324-00		BULKHEAD - LH	1	
	20324 01		BULKHEAD - RH	1	
-62	20364-00		BULKHEAD - LH	1	
	20364-01		BULKHEAD - RH	1	
-63	20273-12		STIFFENER - Leading edge, LH	1	
	20273-13		STIFFENER - Leading edge, RH	1	
-64	20273-10		STIFFENER - Leading edge, LH	1	
	20273-11		STIFFENER - Leading edge, RH	1	
-65	20273-14		STIFFENER - Leading edge, LH	1	
	20273-15		STIFFENER - Leading edge, RH	1	
-66	20273-06		STIFFENER - Leading edge, LH	1	
	20273-07		STIFFENER - Leading edge, RH	1	
-67	20273-04		STIFFENER - Leading edge, LH	1	
	20273-05		STIFFENER - Leading edge, RH	1	
-68	20273-02		STIFFENER - Leading edge, LH	1	
	20273-03		STIFFENER - Leading edge, RH	1	
-69	20360-14		ANGLE - Landing gear recess opening, reinforcement, left	1	
	20360-15		ANGLE - Landing gear recess opening, reinforcement, right	1	
-70	21072-00		BULKHEAD - Landing gear door attachment, left	1	
	21072-01		BULKHEAD - Landing gear door attachment, right	1	

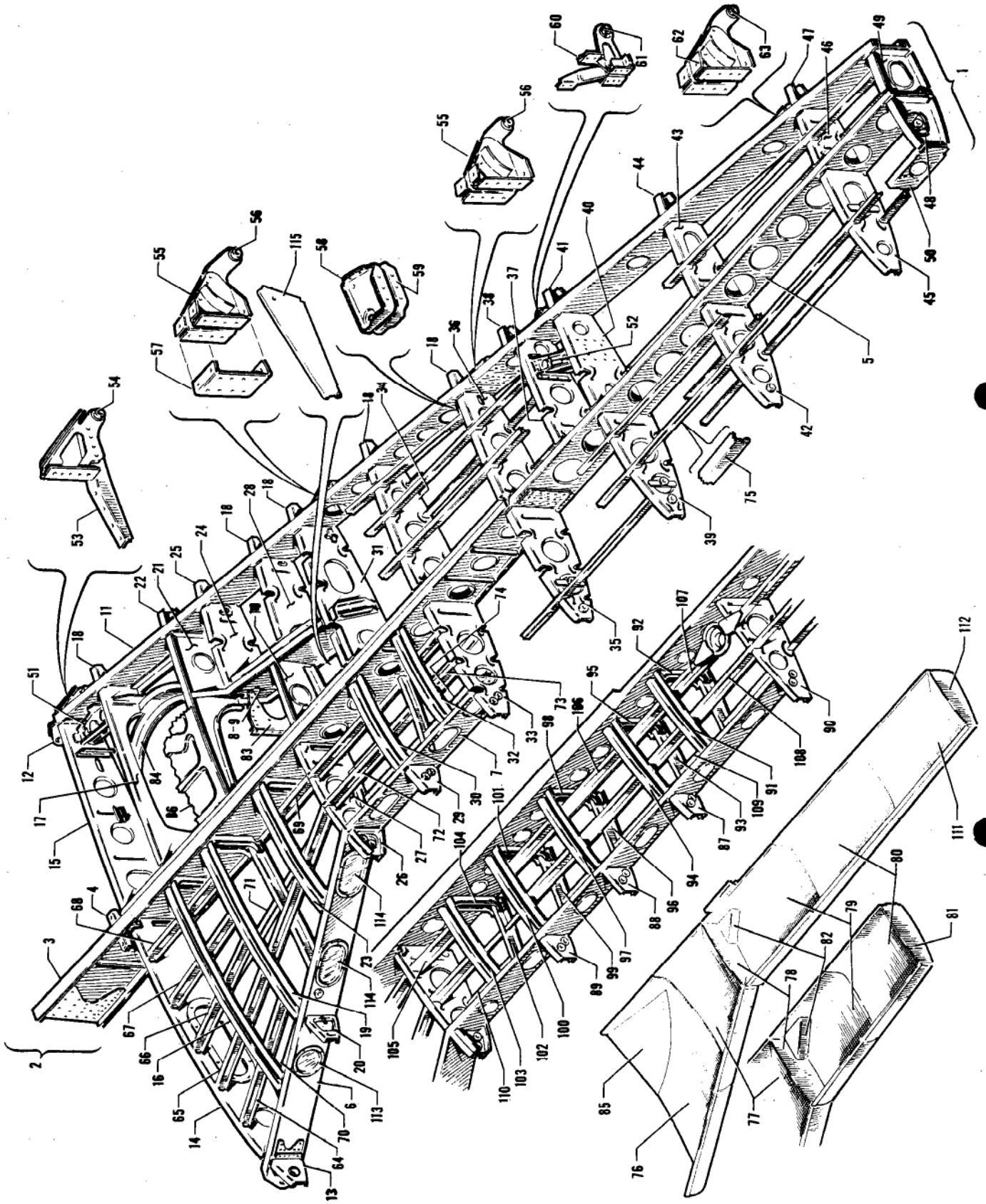

Figure 3A. Wing Construction
(Wing Panels 22181, 22701, 22700 and 24723)

Figure and Index Number	Part Number	Code	NOMENCLATURE	No. Req.	SERIAL NUMBERS AFFECTED
3A-	20373	XY	DRAWING - Wing Wires and Tubes Installation		24-1 to 24-2298 inclusive
	22464	XY	DRAWING - Wing Wires and Tubes Installation		24-2299 and up
	22770	Z	DRAWING - Wing Wires and Tubes Installation		
	24790	V	DRAWING - Wing Wires and Tubes Installation		
	22181	AXY	DRAWING - Wing Panel Assembly		24-1 to 24-2843 inclusive
	22181	AX	DRAWING - Wing Panel Assembly		24-2844 and up
	22701	AY	DRAWING - Wing Panel Assembly		24-2844 and up
	22700	AZ	DRAWING - Wing Panel Assembly		
	24723	V	DRAWING - Wing Panel Assembly		
-1	22181-00	ABD	PANEL ASSEMBLY - Wing, left	1	
	22181-01	ABD	PANEL ASSEMBLY - Wing, right	1	
	22181-02	CY	PANEL ASSEMBLY - Wing, left	1	24-2299 to 24-2843 inclusive
	22701-00	Y	PANEL ASSEMBLY - Wing, left	1	24-2844 and up
	22181-03	CY	PANEL ASSEMBLY - Wing, right	1	24-2299 to 24-2843 inclusive
	22701-01	Y	PANEL ASSEMBLY - Wing, right	1	24-2844 and up
	22700-00	Z	PANEL ASSEMBLY - Wing, left	1	
	22700-01	Z	PANEL ASSEMBLY - Wing, right	1	
	24723-00	E	PANEL ASSEMBLY - Wing, left	1	
	24723-01	E	PANEL ASSEMBLY - Wing, right	1	
	24723-02	V	PANEL ASSEMBLY - Wing, left	1	24-4247, 24-4300 and up
	24723-03	V	PANEL ASSEMBLY - Wing, right	1	24-4247, 24-4300 and up
-2	20296-04	XY	SPAR ASSEMBLY - Main, left	1	24-1 to 24-2843 inclusive
	20296-03	XY	SPAR ASSEMBLY - Main, right	1	24-1 to 24-2843 inclusive
	20296-06	XY	SPAR ASSEMBLY - Main, left	1	24-2844 to 24-3522 inclusive
	20296-05	XY	SPAR ASSEMBLY - Main, right	1	24-2844 to 24-3507 inclusive
	20296-08	XY	SPAR ASSEMBLY - Main, left	1	24-3523 and up
	20296-07	XY	SPAR ASSEMBLY - Main, right	1	24-3508 and up
	22835-00	Z	SPAR ASSEMBLY - Main, left	1	
	22835-01	Z	SPAR ASSEMBLY - Main, right	1	
	20296-10	V	SPAR ASSEMBLY - Main, left	1	
	20296-09	V	SPAR ASSEMBLY - Main, right	1	
-3	22152-00	XY	SPAR ASSEMBLY - Main, inboard, left	1	24-1 to 24-3522 inclusive
	22152-01	XY	SPAR ASSEMBLY - Main, inboard, right	1	24-1 to 24-3507 inclusive
	23551-00	XY	SPAR ASSEMBLY - Main, inboard, left	1	24-3523 and up
	23551-01	XY	SPAR ASSEMBLY - Main, inboard, right	1	24-3508 and up
	22819-00	Z	SPAR ASSEMBLY - Main, inboard, left	1	
	22819-01	Z	SPAR ASSEMBLY - Main, inboard, right	1	
	23551-04	V	SPAR ASSEMBLY - Main, inboard, left	1	
	23551-05	V	SPAR ASSEMBLY - Main, inboard, right	1	
-4	20396-00		FITTING - Main spar attachment	2	

A - Check part number plate located in wheel well before ordering.
B - Used when auxiliary fuel cells are not installed.
C - Used when auxiliary fuel cells are installed.
D - Used on PA-24-180 with serial numbers 24-1 and up or PA-24-250 with serial numbers 24-105 to 24-2843 inclusive.
E - Used on PA-24-260 with serial numbers 24-3642, 24-4000 to 24-4246, 24-4248 to 24-4299 inclusive.
V - Used on PA-24-260 airplanes only.
X - Used on PA-24-180 airplanes only.
Y - Used on PA-24-250 airplanes only.
Z - Used on PA-24-400 airplanes only.

Figure and Index Number	Part Number	Code	NOMENCLATURE	No. Req.	SERIAL NUMBERS AFFECTED
3A-5	20252-00	XY	SPAR ASSEMBLY - Main, outboard, left	1	24-1 to 24-2843 inclusive
	20252-01	XY	SPAR ASSEMBLY - Main, outboard, right	1	24-1 to 24-2843 inclusive
	20252-06		SPAR ASSEMBLY - Main, outboard, left	1	24-2844 and up, 26-2 and up
	20252-05		SPAR ASSEMBLY - Main, outboard, right	1	24-2844 and up, 26-2 and up
-6	20254-00		SPAR ASSEMBLY - Front, left	1	
	20254-01		SPAR ASSEMBLY - Front, right	1	
-7	22154-00	VXY	TIP - Front spar, left	1	
	22154-01	VXY	TIP - Front spar, right	1	
	22829-00	Z	TIP - Front spar, left	1	
	22829-01	Z	TIP - Front spar, right	1	
-8	20360-34	A	BULKHEAD ASSEMBLY - LH	1	24-1 to 24-2843 inclusive
	20360-35	A	BULKHEAD ASSEMBLY - RH	1	24-1 to 24-2843 inclusive
-9	20324-00	A	BULKHEAD - LH	1	
	20324-01	A	BULKHEAD - RH	1	
-10	20364-00	A	BULKHEAD - LH	1	24-1 to 24-2843 inclusive
	20364-01	A	BULKHEAD - RH	1	24-1 to 24-2843 inclusive
-11	20266-00	XY	SPAR ASSEMBLY - Rear, left (complete)	1	24-1 to 24-2843 inclusive
	20266-01	XY	SPAR ASSEMBLY - Rear, right (complete)	1	24-1 to 24-2843 inclusive
	22763-00	BY	SPAR ASSEMBLY - Rear, left (complete)	1	24-2844 and up
	22763-01	BY	SPAR ASSEMBLY - Rear, right (complete)	1	24-2844 and up
	20266-00	X	SPAR ASSEMBLY - Rear, left (complete)	1	24-2844 and up
	20266-01	X	SPAR ASSEMBLY - Rear, right (complete)	1	24-2844 and up
	23479-06	BZ	SPAR ASSEMBLY - Rear, left (complete)	1	
	23479-07	BZ	SPAR ASSEMBLY - Rear, right (complete)	1	
	22763-00	BV	SPAR ASSEMBLY - Rear, left (complete)	1	
	22763-01	BV	SPAR ASSEMBLY - Rear, right (complete)	1	
-12	80022-92		BUSHING	1	
-13	20335-00	XY	BULKHEAD ASSEMBLY - Nose, left, Sta. 25	1	
	20335-01	XY	BULKHEAD ASSEMBLY - Nose, right, Sta. 25	1	
	24747-00	VZ	BULKHEAD ASSEMBLY - Nose, left, Sta. 25	1	
	24747-01	VZ	BULKHEAD ASSEMBLY - Nose, right, Sta. 25	1	
-14	20336-00	XY	RIB ASSEMBLY - Nose, left, Sta. 25	1	24-1 to 24-2843 inclusive
	20336-01	XY	RIB ASSEMBLY - Nose, right, Sta. 25	1	24-1 to 24-2843 inclusive
	22908-00	VYZ	RIB ASSEMBLY - Nose, left, Sta. 25	1	24-2844 and up, 26-2 and up
	22908 01	VYZ	RIB ASSEMBLY - Nose, right, Sta. 25	1	24-2844 and up, 26-2 and up
	20336-00	X	RIB ASSEMBLY - Nose, left, Sta. 25	1	24-2844 and up
	20336-01	X	RIB ASSEMBLY - Nose, right, Sta. 25	1	24-2844 and up
-15	20319-00	A	RIB ASSEMBLY - Main, left, Sta. 25	1	24-1 to 24-2843 inclusive
	20319-01	A	RIB ASSEMBLY - Main, right, Sta. 25	1	24-1 to 24-2843 inclusive
-16	20357-10		RIB ASSEMBLY - Top, left, Sta. 32	1	
	20357-11		RIB ASSEMBLY - Top, right, Sta. 32	1	
	20357-08		RIB ASSEMBLY - Bottom, left, Sta. 32	1	
	20357-09		RIB ASSEMBLY - Bottom, right, Sta. 32	1	
	20357-06		BULKHEAD - Left, Sta. 32	1	
	20357-07		BULKHEAD - Right, Sta. 32	1	

A - Used on PA-24-180 with serial numbers 24-2844 and up. See Figure 3B for similar parts for PA-24-250 with serial numbers 24-2844 and up, PA-24-400 and PA-24-260.
B - See Figure 3B for component parts.
V - Used on PA-24-260 airplanes only.
X - Used on PA-24-180 airplanes only.
Y - Used on PA-24-250 airplanes only.
Z - Used on PA-24-400 airplanes only.

Figure and Index Number	Part Number	Code	NOMENCLATURE	No. Req.	SERIAL NUMBERS AFFECTED
3A-17	20321-00	A	RIB ASSEMBLY - Main, left, Sta. 33	1	24-1 to 24-2843 inclusive
	20321-01	A	RIB ASSEMBLY - Main, right, Sta. 33	1	24-1 to 24-2843 inclusive
-18	20337-05	A	BULKHEAD ASSEMBLY - Rear spar, left, Sta. 33, 68, 78, 97, 120	5	24-1 to 24-2843 inclusive
	20337-04	A	BULKHEAD ASSEMBLY - Rear spar, right, Sta. 33, 68, 78, 97, 120	5	24-1 to 24-2843 inclusive
-19	20303-16	B	RIB ASSEMBLY - Top, left, Sta. 41	1	
	20303-22	V	RIB ASSEMBLY - Top, left, Sta. 41	1	24-4783, 24-4804 and up
	20303-17	B	RIB ASSEMBLY - Top, right, Sta. 41	1	
	20303-23	V	RIB ASSEMBLY - Top, right, Sta. 41	1	24-4783, 24-4804 and up
	20303-18		RIB ASSEMBLY - Bottom, left, Sta. 41	1	
	20303-19		RIB ASSEMBLY - Bottom, right, Sta. 41	1	
	20303-08		BULKHEAD - Left, Sta. 41	1	
	20303-09		BULKHEAD - Right, Sta. 41	1	
-20	20303-14	XY	BULKHEAD ASSEMBLY - Nose, left, Sta. 41	1	
	20303-15	XY	BULKHEAD ASSEMBLY - Nose, right, Sta. 41	1	
	24748-00	VZ	BULKHEAD ASSEMBLY - Nose, left, Sta. 41	1	
	24748-01	VZ	BULKHEAD ASSEMBLY - Nose, right, Sta. 41	1	
-21	20320-00	A	RIB ASSEMBLY - Main, left, Sta. 47	1	24-1 to 24-2843 inclusive
	20320-01	A	RIB ASSEMBLY - Main, right, Sta. 47	1	24-1 to 24-2843 inclusive
-22	20337-06	A	BULKHEAD ASSEMBLY - Rear spar, left, Sta. 47	1	24-1 to 24-2843 inclusive
	20337-07	A	BULKHEAD ASSEMBLY - Rear spar, right, Sta. 47	1	24-1 to 24-2843 inclusive
-23	20307-10	B	RIB ASSEMBLY - Top, left, Sta. 52	1	
	20307-14	V	RIB ASSEMBLY - Top, left, Sta. 52	1	24-4783, 24-4804 and up
	20307-11	B	RIB ASSEMBLY - Top, right, Sta. 52	1	
	20307-15	V	RIB ASSEMBLY - Top, right, Sta. 52	1	24-4783, 24-4804 and up
	20307-08		RIB ASSEMBLY - Bottom, left, Sta. 52	1	
	20307-09		RIB ASSEMBLY - Bottom, right, Sta. 52	1	
	20307-06		BULKHEAD - Left, Sta. 52	1	
	20307-07		BULKHEAD - Right, Sta. 52	1	
-24	20351-00	A	RIB ASSEMBLY - Main, left, Sta. 55	1	24-1 to 24-2843 inclusive
-25	20337-09	A	BULKHEAD ASSEMBLY - Rear spar, left, Sta. 55	1	24-1 to 24-2843 inclusive
	20337-08	A	BULKHEAD ASSEMBLY - Rear spar, right, Sta. 55	1	24-1 to 24-2843 inclusive
-26	20323-02		BULKHEAD ASSEMBLY - Nose, left, Sta. 62	1	
	20323-03		BULKHEAD ASSEMBLY - Nose, right, Sta. 62	1	
-27	22155-00	VXY	RIB ASSEMBLY - Nose, left, Sta. 62	1	
	22155-01	VXY	RIB ASSEMBLY - Nose, right, Sta. 62	1	
	22155-08	Z	RIB ASSEMBLY - Nose, left, Sta. 62	1	
	22155-09	Z	RIB ASSEMBLY - Nose, right, Sta. 62	1	
-28	20308-00	A	RIB ASSEMBLY - Main, left, Sta. 68	1	24-1 to 24-2843 inclusive
	20308-01	A	RIB ASSEMBLY - Main, right, Sta. 68	1	24-1 to 24-2843 inclusive
-29	22156-00	VXY	BULKHEAD ASSEMBLY - Nose, left, Sta. 77	1	
	22156-01	VXY	BULKHEAD ASSEMBLY - Nose, right, Sta. 77	1	

A - Used on PA-24-180 with serial numbers 24-2844 and up. See Figure 3B for similar parts for PA-24-250 with serial numbers 24-2844 and up, PA-24-400 and PA-24-260.
B - Used on PA-24-180 and PA-24-250with serial numbers 24-1 and up, PA-24-260 with serial numbers 24-3642, 24-4000 to 24-4782, 24-4784 to 24-4803 inclusive, and PA-24-400 with serial numbers 26-2 and up.
V - Used on PA-24-260 airplanes only.
X - Used on PA-24-180 airplanes only.
Y - Used on PA-24-250 airplanes only.
Z - Used on PA-24-400 airplanes only.

Figure and Index Number	Part Number	Code	NOMENCLATURE	No. Req.	SERIAL NUMBERS AFFECTED
3A-30	22162-08	B	RIB ASSEMBLY - Top, left, Sta. 77	1	
	22162-14	V	RIB ASSEMBLY - Top, left, Sta. 77	1	24-4783, 24-4804 and up
	22162-09	B	RIB ASSEMBLY - Top, right, Sta. 77	1	
	22162-15	V	RIB ASSEMBLY - Top, right, Sta. 77	1	24-4783, 24-4804 and up
	22162-10	VXY	RIB ASSEMBLY - Bottom, left, Sta. 77	1	
	22162-11	VXY	RIB ASSEMBLY - Bottom, right, Sta. 77	1	
	22162-02	VXY	BULKHEAD - Left, Sta. 77	1	
	22162-03	VXY	BULKHEAD - Right, Sta. 77	1	
-31	20354-00	A	RIB ASSEMBLY - Main, left, Sta. 78	1	24-1 to 24-2843 inclusive
	20354-01	A	RIB ASSEMBLY - Main, right, Sta. 78	1	24-1 to 24-2843 inclusive
-32	22158-08	B	RIB ASSEMBLY - Top, left, Sta. 88	1	
	22158-14	V	RIB ASSEMBLY - Top, left, Sta. 88	1	24-4783, 24-4804 and up
	22158-09	B	RIB ASSEMBLY - Top, right, Sta. 88	1	
	22158-15	V	RIB ASSEMBLY - Top, right, Sta. 88	1	24-4783, 24-4804 and up
	22158-10	VXY	RIB ASSEMBLY - Bottom, left, Sta. 88	1	
	22158-11	VXY	RIB ASSEMBLY - Bottom, right, Sta. 88	1	
	22158-02	VXY	BULKHEAD - Left, Sta. 88	1	
	22158-03	VXY	BULKHEAD - Right, Sta. 88	1	
-33	22151-00	VXY	RIB ASSEMBLY - Nose, left, Sta. 97	1	
	22151-01	VXY	RIB ASSEMBLY - Nose, right, Sta. 97	1	
-34	20263-04		RIB ASSEMBLY - Main, left, Sta. 97	1	
	20263-05		RIB ASSEMBLY - Main, right, Sta. 97	1	
-35	20270-00	VXY	RIB ASSEMBLY - Nose, left, Sta. 120	1	
	20270-01	VXY	RIB ASSEMBLY - Nose, right, Sta. 120	1	
-36	20269-00		RIB ASSEMBLY - Main, left, Sta. 120	1	
	20269-01		RIB ASSEMBLY - Main, right, Sta. 120	1	
-37	20318-00		RIB ASSEMBLY - Main, left, Sta. 135	1	
	20318-01		RIB ASSEMBLY - Main, right, Sta. 135	1	
-38	20337-02	A	BULKHEAD ASSEMBLY - Rear spar, left, Sta. 133	1	24-1 to 24-2843 inclusive
	20337-03	A	BULKHEAD ASSEMBLY - Rear spar, right, Sta. 133	1	24-1 to 24-2843 inclusive
-39	20282-00	VXY	RIB ASSEMBLY - Nose, left, Sta. 143	1	
	20282-03	VXY	RIB ASSEMBLY - Nose, right, Sta. 143	1	
	22786-00	Z	RIB ASSEMBLY - Nose, left, Sta. 143	1	
	22786-01	Z	RIB ASSEMBLY - Nose, right, Sta. 143	1	
-40	20283-00		RIB ASSEMBLY - Main, left, Sta. 143	1	
	20283-01		RIB ASSEMBLY - Main, right, Sta. 143	1	
-41	20288-00		BULKHEAD ASSEMBLY - Rear spar, left, Sta. 143	1	
	20288-01		BULKHEAD ASSEMBLY - Rear spar, right, Sta. 143	1	
-42	20310-02		RIB ASSEMBLY - Nose, left, Sta. 169	1	
	20310-03		RIB ASSEMBLY - Nose, right, Sta. 169	1	
-43	20310-04		RIB ASSEMBLY - Main, left, Sta. 169	1	
	20310-05		RIB ASSEMBLY - Main, right, Sta. 169	1	
-44	20262-00		BULKHEAD ASSEMBLY - Rear spar, left, Sta. 169	1	
	20262-01		BULKHEAD ASSEMBLY - Rear spar, right, Sta. 169	1	

A - Used on PA-24-180 with serial number 24-2844 and up. See Figure 3B for similar parts for PA-24-250 serial number 24-2844 and up, PA-24-400 and PA-24-260.
B - Used on PA-24-180 and PA-24-250 with serial numbers 24-2231 and up, and PA-24-260 with serial numbers 24-3642, 24-4000 to 24-4782, 24-4783 to 24-4803.
V - Used on PA-24-260 airplanes only.
X - Used on PA-24-180 airplanes only.
Y - Used on PA-24-250 airplanes only.
Z - Used on PA-24-400 airplanes only.

Figure and Index Number	Part Number	Code	NOMENCLATURE	No. Req.	SERIAL NUMBERS AFFECTED
3A-45	20275-06		RIB ASSEMBLY - Nose, left, Sta. 197	1	
	20275-07		RIB ASSEMBLY - Nose, right, Sta. 197	1	
-46	20275-04		RIB ASSEMBLY - Main, left, Sta. 197	1	
	20275-05		RIB ASSEMBLY - Main, right, Sta. 197	1	
-47	20288-00		BULKHEAD ASSEMBLY - Rear spar, left, Sta. 197	1	
	20288-01		BULKHEAD ASSEMBLY - Rear spar, right, Sta. 197	1	
-48	20272-10		RIB ASSEMBLY - Nose, left, Sta. 211	1	
	20272-11		RIB ASSEMBLY - Nose, right, Sta. 211	1	
-49	20274-06		RIB ASSEMBLY - Main, left, Sta. 211	1	
	20274-07		RIB ASSEMBLY - Main, right, Sta. 211	1	
-50	20346-00		BRACKET - Landing light support	1	
-51	20656-06	A	BRACKET ASSEMBLY - Flap control selector, left top, right bottom	1	24-1 to 24-2843 inclusive
	20656-07	A	BRACKET ASSEMBLY - Flap control selector, left bottom, right top	1	24-1 to 24-2843 inclusive
-52	20309-00		BRACKET ASSEMBLY - Aileron bellcrank, left	1	
	20309-01		BRACKET ASSEMBLY - Aileron bellcrank, right	1	
-53	20240-00	A	BRACKET ASSEMBLY - Flap hinge, inboard, left	1	24-1 to 24-2843 inclusive
	20240-01	A	BRACKET ASSEMBLY - Flap hinge, inboard, right	1	24-1 to 24-2843 inclusive
-54	452 345		BEARING - CS2170	1	
-55	20302-00	A	BRACKET ASSEMBLY - Flap hinge	2	24-1 to 24-2843 inclusive
-56	452 345		BEARING - CS2170	2	
-57	20300-00	A	PLATE - Flap hinge reinforcement	1	24-1 to 24-2843 inclusive
-58	20289-00		BRACKET - Aileron pulley, left	1	
	20289-01		BRACKET - Aileron pulley, right	1	
-59	20289-00		BRACKET - Aileron pulley, left	1	
	20289-01		BRACKET - Aileron pulley, right	1	
-60	20293-00		BRACKET - Aileron hinge, inboard	1	
-61	25704-00		BEARING - Aileron hinge	1	
-62	20294-00		BRACKET - Aileron hinge, outboard	1	
-63	25704-00		BEARING - Aileron hinge	1	
-64	20273-02		STIFFENER - Leading edge, top, LH	1	
	20273-03		STIFFENER - Leading edge, top, RH	1	
-65	20273-16		STIFFENER - Leading edge, top, LH	1	
	20273-17		STIFFENER - Leading edge, top, RH	1	
-66	20273-06		STIFFENER - Leading edge, top, LH	1	
	20273-07		STIFFENER - Leading edge, top, RH	1	
-67	20273-10		STIFFENER - Leading edge, top, LH	1	
	20273-11		STIFFENER - Leading edge, top, RH	1	
-68	20273-12		STIFFENER - Leading edge, top, LH	1	
	20273-13		STIFFENER - Leading edge, top, RH	1	
-69	20273-20		STIFFENER - Leading edge, top, LH	1	
	20273-21		STIFFENER - Leading edge, top, RH	1	
-70	20273-17		STIFFENER - Leading edge, bottom, LH	1	
	20273-16		STIFFENER - Leading edge, bottom, RH	1	
-71	20273-18		STIFFENER - Leading edge, bottom, LH	1	
	20273-19		STIFFENER - Leading edge, bottom, RH	1	

A - Used on PA-24-180 with serial number 24-2844 and up. See Figure 3B for similar parts for PA-24-250 serial number 24-2844 and up, PA-24-400 and PA-24-260.

Figure and Index Number	Part Number	Code	NOMENCLATURE	No. Req.	SERIAL NUMBERS AFFECTED
3A-72	22178-02	VXY	STIFFENER - Leading edge, top, LH	2	
	22178-03	VXY	STIFFENER - Leading edge, top, RH	2	
-73	22178-04	VXY	STIFFENER - Leading edge, top, LH	2	
	22178-05	VXY	STIFFENER - Leading edge, top, RH	2	
-74	22178-06	VXY	STIFFENER - Leading edge, bottom, LH	2	
	22178-07	VXY	STIFFENER - Leading edge, bottom, RH	2	
-75	751 228		ANGLE - Stringer (6 ft. section)	1	
-76	20286-02	X	LINER - Fuel cell, inboard, left	1	
	20286-03	X	LINER - Fuel cell, inboard, right	1	
	20286-02	Y	LINER - Fuel cell, inboard, left	1	24-105 to 24-2843 inclusive
	20286-03	Y	LINER - Fuel cell, inboard, right	1	24-105 to 24-2843 inclusive
	22902-00	VYZ	LINER - Fuel cell, inboard, left	1	24-2844 and up, 26-2 and up
	22902-01	VYZ	LINER - Fuel cell, inboard, right	1	24-2844 and up, 26-2 and up
-77	20286-04		LINER - Fuel cell, outboard, left	1	
	20286-05		LINER - Fuel cell, outboard, right	1	
-78	20287-00		LINER ASSEMBLY - Fuel cell, outboard, left	1	
	20287-01		LINER ASSEMBLY - Fuel cell, outboard, right	1	
-79	22274-02	VY	LINER - Fuel cell, inboard, left	1	
	22274-03	VY	LINER - Fuel cell, inboard, right	1	
	22844-00	Z	LINER - Fuel cell, inboard, left	1	
	22844-01	Z	LINER - Fuel cell, inboard, right	1	
-80	22274-04	VY	LINER - Fuel cell, outboard, left	1	
	22274-05	VY	LINER - Fuel cell, outboard, right	1	
	22884-00	Z	LINER - Fuel cell, center, left	1	
	22884-01	Z	LINER - Fuel cell, center, right	1	
-81	22271-00	VY	LINER - Fuel cell, outboard, left	1	
	22271-01	VY	LINER - Fuel cell, outboard, right	1	
-82	22268-00	Y	LINER ASSEMBLY - Fuel cell corner, left	1	
	22268-01	Y	LINER ASSEMBLY - Fuel cell corner, right	1	
	22268-05	Z	LINER ASSEMBLY - Fuel cell corner, left	1	
	22268-06	Z	LINER ASSEMBLY - Fuel cell corner, right	1	
-83	20867-00	X	ANGLE - Support plate attachment	1	
	20867-00	Y	ANGLE - Support plate attachment	1	24-1 to 24-2843 inclusive
	22649-00	VYZ	ANGLE - Support plate attachment	1	24-2844 and up, 26-2 and up
-84	20360-14		ANGLE - Landing gear recess opening, reinforcement, left	1	
	20360-15		ANGLE - Landing gear recess opening, reinforcement, right	1	
-85	23677-00	VYZ	SHIM - Fuel cell, left	1	
	23677-01	VYZ	SHIM - Fuel cell, right	1	
-86	20267-00	XY	REINFORCEMENT ASSEMBLY - Wing walkway, left	1	
	20267-02	VZ	REINFORCEMENT ASSEMBLY - Wing walkway, left	1	
	21290-00	XY	REINFORCEMENT ASSEMBLY - Wing walkway, right	1	
	21290-02	VZ	REINFORCEMENT ASSEMBLY - Wing walkway, right	1	
-87	22716-00	Z	RIB - Nose, left, Sta. 115	1	
	22716-01	Z	RIB - Nose, right, Sta. 115	1	
-88	22710-00	Z	RIB - Nose, left, Sta. 97	1	
	22710-01	Z	RIB - Nose, right, Sta. 97	1	
-89	22706-00	Z	RIB - Nose, left, Sta. 83	1	
	22706-01	Z	RIB - Nose, right, Sta. 83	1	

V - Used on PA-24-260 airplanes only.
X - Used on PA-24-180 airplanes only.
Y - Used on PA-24-250 airplanes only.
Z - Used on PA-24-400 airplanes only.

Figure and Index Number	Part Number	Code	NOMENCLATURE	No. Req.	SERIAL NUMBERS AFFECTED
3A-90	22755-10	Z	CHANNEL ASSEMBLY - Bottom, left, Sta. 125	1	
	22755-11	Z	CHANNEL ASSEMBLY - Bottom, right, Sta. 125	1	
-91	22755-08	Z	CHANNEL ASSEMBLY - Top, left, Sta. 125	1	
	22755-09	Z	CHANNEL ASSEMBLY - Top, right, Sta. 125	1	
-92	22755-02	Z	CHANNEL - Rear, left, Sta. 125	1	
	22755-03	Z	CHANNEL - Rear, right, Sta. 125	1	
-93	22744-10	Z	CHANNEL ASSEMBLY - Bottom, left, Sta. 114	1	
	22744-11	Z	CHANNEL ASSEMBLY - Bottom, right, Sta. 114	1	
-94	22744-08	Z	CHANNEL ASSEMBLY - Top, left, Sta. 114	1	
	22744-09	Z	CHANNEL ASSEMBLY - Top, right, Sta. 114	1	
-95	22744-02	Z	CHANNEL - Rear, left, Sta. 114	1	
	22744-03	Z	CHANNEL - Rear, right, Sta. 114	1	
-96	22727-10	Z	CHANNEL ASSEMBLY - Bottom, left, Sta. 96	1	
	22727-11	Z	CHANNEL ASSEMBLY - Bottom, right, Sta. 96	1	
-97	22727-08	Z	CHANNEL ASSEMBLY - Top, left, Sta. 96	1	
	22727-09	Z	CHANNEL ASSEMBLY - Top, right, Sta. 96	1	
-98	22727-02	Z	CHANNEL - Rear, left, Sta. 96	1	
	22727-03	Z	CHANNEL - Rear, right, Sta. 96	1	
-99	22686-10	Z	CHANNEL ASSEMBLY - Bottom, left, Sta. 83	1	
	22686-11	Z	CHANNEL ASSEMBLY - Bottom, right, Sta. 83	1	
-100	22686-08	Z	CHANNEL ASSEMBLY - Top, left, Sta. 83	1	
	22686-09	Z	CHANNEL ASSEMBLY - Top, right, Sta. 83	1	
-101	22686-02	Z	CHANNEL - Rear, left, Sta. 83	1	
	22686-03	Z	CHANNEL - Rear, right, Sta. 83	1	
-102	22769-10	Z	CHANNEL ASSEMBLY - Bottom, left, Sta. 72	1	
	22769-11	Z	CHANNEL ASSEMBLY - Bottom, right, Sta. 72	1	
-103	22769-08	Z	CHANNEL ASSEMBLY - Top, left, Sta. 72	1	
	22769-09	Z	CHANNEL ASSEMBLY - Top, right, Sta. 72	1	
-104	22769-02	Z	CHANNEL - Rear, left, Sta. 72	1	
	22769-03	Z	CHANNEL - Rear, right, Sta. 72	1	
-105	22917-02	Z	STIFFENER - Top, left, Sta. 62 to Sta. 72	2	
	22917-03	Z	STIFFENER - Top, right, Sta. 62 to Sta. 72	2	
-106	22917-04	Z	STIFFENER - Top, left, Sta. 83 to Sta. 114	2	
	22917-05	Z	STIFFENER - Top, right, Sta. 83 to Sta. 114	2	
-107	22917-06	Z	STIFFENER - Top, left, Sta. 125 to Sta. 136	1	
	22917-07	Z	STIFFENER - Top, right, Sta. 125 to Sta. 136	1	
-108	22917-08	Z	STIFFENER - Top, left, Sta. 125 to Sta. 143	1	
	22917-09	Z	STIFFENER - Top, right, Sta. 125 to Sta. 143	1	
-109	22917-10	Z	STIFFENER - Bottom, left, Sta. 96 to Sta. 143	2	
	22917-11	Z	STIFFENER - Bottom, right, Sta. 96 to Sta. 143	2	
-110	22917-12	Z	STIFFENER - Bottom, left, Sta. 62 to Sta. 96	2	
	22917-13	Z	STIFFENER - Bottom, right, Sta. 62 to Sta. 96	2	
-111	22885-00	Z	LINER - Fuel cell, outboard, left	1	
	22885-01	Z	LINER - Fuel cell, outboard, right	1	
-112	22778 00	Z	LINER - Fuel cell, outboard, left	1	
	22778-01	Z	LINER - Fuel cell, outboard, right	1	
-113	24733-00	VZ	PLATE - Spar opening cover	1	
-114	24734-00	VZ	PLATE - Spar opening cover	2	
-115	21072-00		BULKHEAD - Landing gear door attachment, left	1	
	21072-01		BULKHEAD - Landing gear door attachment, right	1	

V - Used on PA-24-260 airplanes only.
Z - Used on PA-24-400 airplanes only.

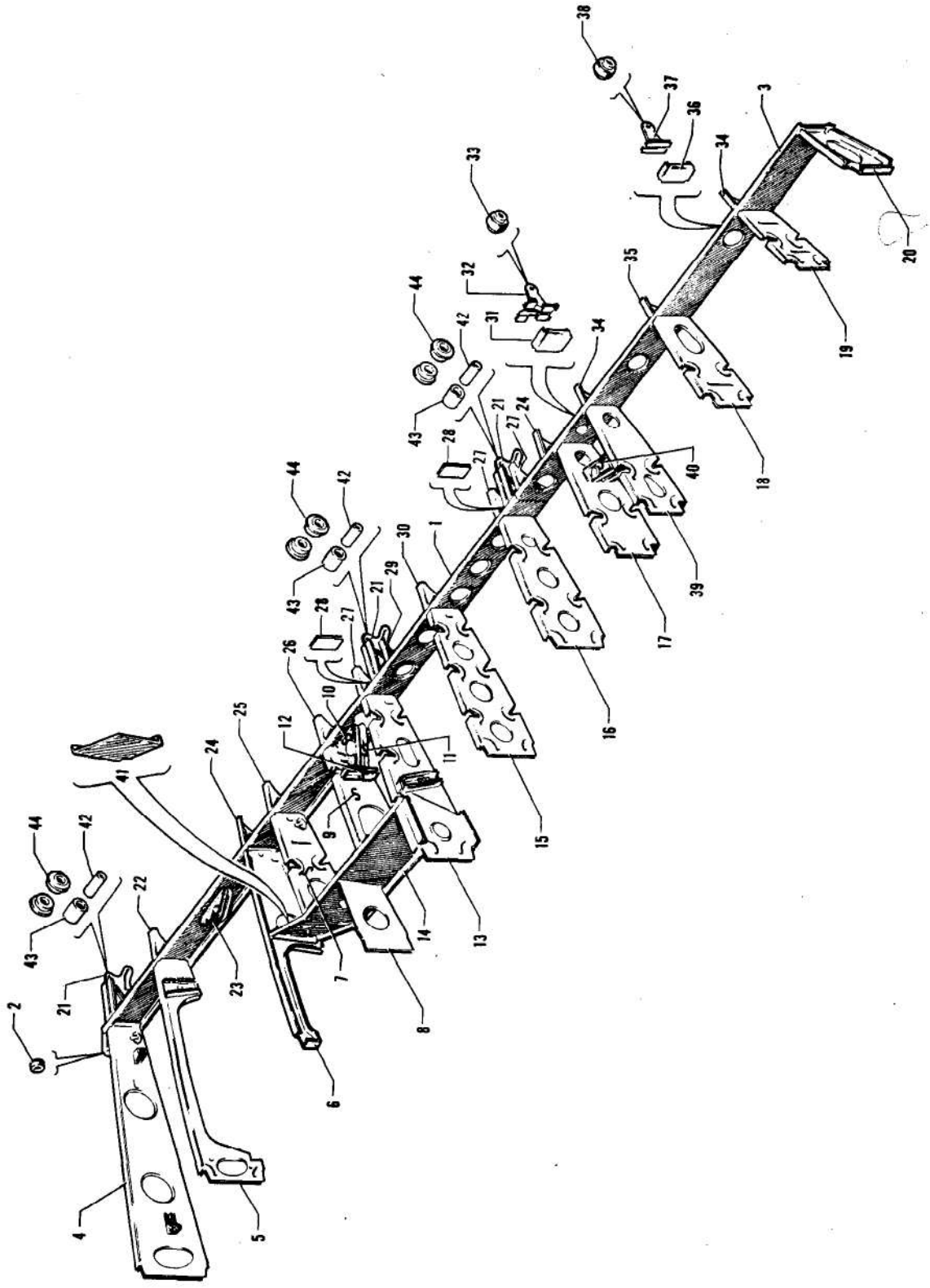

Figure 3B. Wing Construction Rear Spar Section
(Serial Nos. 24-2844 and up, 26-2 and up)

PILOTEN-SERVICE
Straubing LBA II-A-170
Telefon (09429)

Figure and Index Number	Part Number	Code	NOMENCLATURE	No. Req.	SERIAL NUMBERS AFFECTED
3B-	22823	VY	DRAWING - Rear Spar Assembly		
	23480	Z	DRAWING - Rear Spar Assembly		
-1	22761-00	VY	SPAR ASSEMBLY - Wing, rear inboard section, left	1	
	22761-01	VY	SPAR ASSEMBLY - Wing, rear inboard section, right	1	
	24613-00	Z	SPAR ASSEMBLY - Wing, rear inboard section, left	1	
	24613-01	Z	SPAR ASSEMBLY - Wing, rear inboard section, right	1	
-2	80022-92		BUSHING	1	
-3	20266-02		SPAR ASSEMBLY - Wing, rear outboard section, left	1	
	20266-03		SPAR ASSEMBLY - Wing, rear outboard section, right	1	
-4	22788-04	A	RIB ASSEMBLY - Wing, Sta. 25-1/4, left	1	
	22788-00	Z	RIB ASSEMBLY - Wing, Sta. 25-1/4, left	1	
	25409-00	V	RIB ASSEMBLY - Wing, Sta. 25-1/4, left	1	24-4247, 24-4300 and up
	22788-01	A	RIB ASSEMBLY - Wing, Sta. 25-1/4, right	1	
	22788-01	Z	RIB ASSEMBLY - Wing, Sta. 25-1/4, right	1	
	25409-01	V	RIB ASSEMBLY - Wing, Sta. 25-1/4, right	1	24-4247, 24-4300 and up
-5	22803-00	Y	RIB ASSEMBLY - Wing, Sta. 33-1/16, left	1	
	22803-01	Y	RIB ASSEMBLY - Wing, Sta. 33-1/16, right	1	
	22803-04	VZ	RIB ASSEMBLY - Wing, Sta. 33-1/16, left	1	
	22803-05	VZ	RIB ASSEMBLY - Wing, Sta. 33-1/16, right	1	
-6	20320-00	VY	RIB ASSEMBLY - Wing, Sta. 47, left	1	
	20320-01	VY	RIB ASSEMBLY - Wing, Sta. 47, right	1	
	23475-06	Z	RIB ASSEMBLY - Wing, Sta. 47, left	1	
	23475-07	Z	RIB ASSEMBLY - Wing, Sta. 47, right	1	
-7	20351-00	VY	RIB ASSEMBLY - Wing, Sta. 55, left	1	
	20351-01	VY	RIB ASSEMBLY - Wing, Sta. 55, right	1	
	20351-08	Z	RIB ASSEMBLY - Wing, Sta. 55, left	1	
	20351-09	Z	RIB ASSEMBLY - Wing, Sta. 55, right	1	
-8	22866-00		PLATE - Landing gear support, wing, Sta. 62-7/8, left	1	
	22866-01		PLATE - Landing gear support, wing, Sta. 62-7/8, right	1	
-9	22787-00		RIB - Wing, Sta. 68, left	1	
	22787-01		RIB - Wing, Sta. 68, right	1	
-10	22789-00		BRACKET ASSEMBLY - Flap bellcrank, Sta. 68, left	1	
	22789-01		BRACKET ASSEMBLY - Flap bellcrank, Sta. 68, right	1	
-11	22789-04		BRACKET ASSEMBLY - Flap bellcrank, Sta. 68, left	1	
	22789-05		BRACKET ASSEMBLY - Flap bellcrank, Sta. 68, right	1	
-12	22801-00		PLATE - Support, flap bellcrank, Sta. 68, left	1	
	22801-01		PLATE - Support, flap bellcrank, Sta. 68, left	1	
-13	22797-00	VY	RIB - Wing, center, Sta. 78, left	1	
	22797-01	VY	RIB - Wing, center, Sta. 78, right	1	
	23465-00	Z	RIB - Wing, center, Sta. 78, left	1	
	23465-01	Z	RIB - Wing, center, Sta. 78, right	1	
-14	20324-00	VY	BULKHEAD - Landing gear rear support, left	1	
	20324-01	VY	BULKHEAD - Landing gear rear support, right	1	
	20324-02	Z	BULKHEAD - Landing gear rear support, left	1	
	20324-03	Z	BULKHEAD - Landing gear rear support, right	1	

A - Used on PA-24-250 with serial numbers 24-2844 and up, PA-24-260 with serial numbers 24-3642, 24-4000 to 24-4246, 24-4248 to 24-4299 inclusive.
V - Used on PA-24-260 airplanes only.
Y - Used on PA-24-250 airplanes only.
Z - Used on PA-24-400 airplanes only.

Figure and Index Number	Part Number	Code	NOMENCLATURE	No. Req.	SERIAL NUMBERS AFFECTED
3B-15	20263-04		RIB ASSEMBLY - Wing, Sta. 97, left	1	
	20263-05		RIB ASSEMBLY - Wing, Sta. 97, right	1	
-16	20269-00		RIB ASSEMBLY - Wing, Sta. 120, left	1	
	20269-01		RIB ASSEMBLY - Wing, Sta. 120, right	1	
-17	20318-00		RIB ASSEMBLY - Main, left, Sta. 135	1	
	20318-01		RIB ASSEMBLY - Main, right, Sta. 135	1	
-18	20310-04		RIB - Wing, Sta. 169, left	1	
	20310-05		RIB - Wing, Sta. 169, right	1	
-19	20275-04		RIB - Wing, Sta. 197, left	1	
	20275-05		RIB - Wing, Sta. 197, right	1	
-20	20274-06		RIB - Wing, Sta. 211, left	1	
	20274-07		RIB - Wing, Sta. 211, right	1	
-21	23227-00	VY	TRACK ASSEMBLY - Flap	3	
	23227-02	Z	TRACK ASSEMBLY - Flap	3	
-22	22733-04		BULKHEAD - Rear spar, Sta. 33-1/16, left	1	
	22733-05		BULKHEAD - Rear spar, Sta. 33-1/16, right	1	
-23	22768-00	VY	BRACKET - Flap cable pulley	2	
-24	22733-02		BULKHEAD - Rear spar, Sta. 47, 131.90, right	2	
	22733-03		BULKHEAD - Rear spar, Sta. 47, 131.90, left	2	
-25	22733-04		BULKHEAD - Rear spar, Sta. 55, left	1	
	22733-05		BULKHEAD - Rear spar, Sta. 55, right	1	
-26	22733-04		BULKHEAD - Rear spar, Sta. 68, left	1	
	22733-05		BULKHEAD - Rear spar, Sta. 68, right	1	
-27	22733-06		BULKHEAD - Rear spar, Sta. 78, 120, left	3	
	22733-07		BULKHEAD - Rear spar, Sta. 78, 120, right	3	
-28	22780-00		PLATE - Flap track spacer	2	
-29	22733-08		BULKHEAD - Rear spar, Sta. 78, right	1	
	22733-09		BULKHEAD - Rear spar, Sta. 78, left	1	
-30	22733-04		BULKHEAD - Rear spar, Sta. 97, left	1	
	22733-05		BULKHEAD - Rear spar, Sta. 97, right	1	
-31	20242-00		PLATE - Aileron hinge bracket reinforcement, inboard, left	1	
	20242-01		PLATE - Aileron hinge bracket reinforcement, inboard, right	1	
-32	20293-00		BRACKET ASSEMBLY - Aileron hinge, inboard, Sta. 143	1	
-33	452 345		BEARING - (CS 2170)	1	
-34	20288-00		BULKHEAD - Rear spar, Sta. 143, 197, left	2	
	20288-01		BULKHEAD - Rear spar, Sta. 143, 197, right	2	
-35	20262-00		BULKHEAD - Rear spar, Sta. 169, left	1	
	20262-01		BULKHEAD - Rear spar, Sta. 169, right	1	
-36	20284-00		PLATE - Aileron hinge bracket reinforcement, outboard, left	1	
	20284-01		PLATE - Aileron hinge bracket reinforcement, outboard, right	1	
-37	20294-00		BRACKET ASSEMBLY - Aileron hinge, outboard	1	
-38	452 345		BEARING - (CS 2170)	1	
-39	20283-00		RIB ASSEMBLY - Main, left, Sta. 143	1	
	20283-01		RIB ASSEMBLY - Main, right, Sta. 143	1	
-40	20309-00		BRACKET ASSEMBLY - Aileron bellcrank, left	1	
	20309-01		BRACKET ASSEMBLY - Aileron bellcrank, right	1	
-41	23456-00	Z	DOUBLER - Landing gear support bulkhead, left	1	
	23456-01	Z	DOUBLER - Landing gear support bulkhead, right	1	
-42	14976-72		BUSHING - Flap track, internal	12	
-43	14976-73		BUSHING - Flap track, external (steel)	12	24-2844 to 24-4748 inclusive, 26-2 and up
-44	26343-00	V	ROLLER - Flap track, external (nylon)	24	24-4749 and up

V - Used on PA-24-260 airplanes only.
Y - Used on PA-24-250 airplanes only.
Z - Used on PA-24-400 airplanes only.

When ordering, always specify Part Number, Description and Serial Number of Aircraft

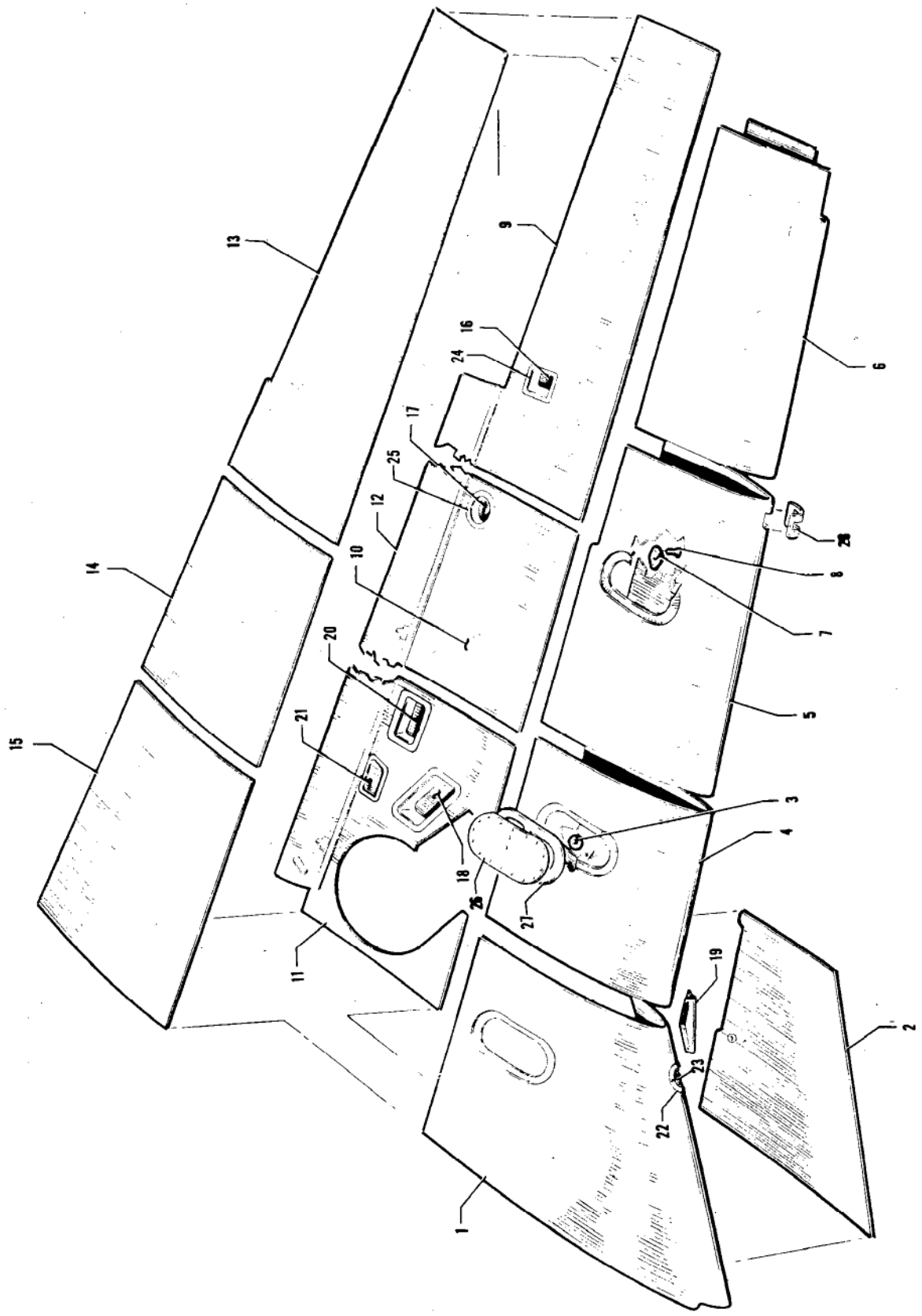

Figure 4. Wing Skin

Figure and Index Number	Part Number	Code	NOMENCLATURE	No. Req.	SERIAL NUMBERS AFFECTED
4-	20373	XY	DRAWING - Wing Wires and Tubes Installation		24-1 to 24-2298 inclusive
	22464	XY	DRAWING - Wing Wires and Tubes Installation		24-2299 and up
	22770	Z	DRAWING - Wing Wires and Tubes Installation		
	24790	V	DRAWING - Wing Wires and Tubes Installation		
	22181	AXY	DRAWING - Wing Panel Assembly		24-1 to 24-2843 inclusive
	22181	AX	DRAWING - Wing Panel Assembly		24-2844 and up
	22701	AY	DRAWING - Wing Panel Assembly		24-2844 and up
	20360	AXY	DRAWING - Wing Panel, Inboard		24-1 to 24-2298 inclusive
	20377	AXY	DRAWING - Wing Panel, Outboard		24-1 to 24-2298 inclusive
	22700	Z	DRAWING - Wing Panel Assembly		
	24723	V	DRAWING - Wing Panel Assembly		
-1	20360-27	XY	SKIN ASSEMBLY - Wing panel leading edge, top, inboard, right	1	
	20360-26	XY	SKIN ASSEMBLY - Wing panel leading edge, top, inboard, left	1	
	22900-20	VZ	SKIN ASSEMBLY - Wing panel leading edge, top, inboard, left	1	
	22900-21	VZ	SKIN ASSEMBLY - Wing panel leading edge, top, inboard, right	1	
-2	20360-29	XY	SKIN ASSEMBLY - Wing panel leading edge, bottom, inboard, right	1	24-1 to 24-3529 inclusive
	23054-05		SKIN ASSEMBLY - Wing panel leading edge, bottom, inboard, right	1	24-3530 and up, 26-2 and up
	20360-28	XY	SKIN ASSEMBLY - Wing panel leading edge, bottom, inboard, left	1	24-1 to 24-3529 inclusive
	23054-04		SKIN ASSEMBLY - Wing panel leading edge, bottom, inboard, left	1	24-3530 and up, 26-2 and up
-3	17365-02		PAD - Jack	2	
-4	20377-49	ABXY	SKIN ASSEMBLY - Wing panel leading edge, center, inboard, right	1	
	20377-27	ACX	SKIN - Wing panel leading edge, center, inboard, right	1	
	22300-03	AVY	SKIN - Wing panel leading edge, center, inboard, right	1	
	22900-11	Z	SKIN - Wing panel leading edge, center, inboard, right	1	
	20377-50	ABXY	SKIN ASSEMBLY - Wing panel leading edge, center, inboard, left	1	
	20377-26	ACX	SKIN - Wing panel leading edge, center, inboard, left	1	
	22300-02	AVY	SKIN - Wing panel leading edge, center, inboard, left	1	
	22900-10	Z	SKIN - Wing panel leading edge, center, inboard, left	1	

A - Check part number plate located in wheel well before ordering.
B - Used on wing panels 20377-00.
C - Used on wing panels 22181-00.
V - Used on PA-24-260 airplanes only.
X - Used on PA-24-180 airplanes only.
Y - Used on PA-24-250 airplanes only.
Z - Used on PA-24-400 airplanes only.

Figure and Index Number	Part Number	Code	NOMENCLATURE	No. Req.	SERIAL NUMBERS AFFECTED
4-5	20377-47	XY	SKIN ASSEMBLY - Wing panel leading edge, center, outboard, right	1	
	20377-48	XY	SKIN ASSEMBLY - Wing panel leading edge, center, outboard, left	1	
	22900-09	Z	SKIN ASSEMBLY - Wing panel leading edge, center, outboard, right	1	
	22900-08	Z	SKIN ASSEMBLY - Wing panel leading edge, center, outboard, left	1	
	22163-09	V	SKIN ASSEMBLY - Wing panel leading edge, center, outboard, right	1	
	22300-06	V	SKIN ASSEMBLY - Wing panel leading edge, center, outboard, left	1	
-6	20377-45	VXY	SKIN ASSEMBLY - Wing panel leading edge, outboard, right	1	
	20377-46	VXY	SKIN ASSEMBLY - Wing panel leading edge, outboard, left	1	
	22900-17	Z	SKIN ASSEMBLY - Wing panel leading edge, outboard, right	1	
	22900-16	Z	SKIN ASSEMBLY - Wing panel leading edge, outboard, left.	1	
-7	18457-00		RING - Tie down	2	
-8	410 043		SCREW - (AN509-10R-14)	4	
-9	20377-29		SKIN - Wing panel, outboard, bottom, right	1	
	20377-28		SKIN - Wing panel, outboard, bottom, left	1	
-10	20377-31		SKIN - Wing panel, center, bottom, right	1	
	20377-30		SKIN - Wing panel, center, bottom, left	1	
-11	20360-09	XY	SKIN - Wing panel, inboard, bottom, right	1	24-1 to 24-2843 inclusive
	20360-08	XY	SKIN - Wing panel, inboard, bottom, left	1	24-1 to 24-2843 inclusive
	22700-09	Y	SKIN - Wing panel, inboard, bottom, right	1	24-2844 to 24-3557 inclusive
	22700-08	Y	SKIN - Wing panel, inboard, bottom, left	1	24-2844 to 24-3557 inclusive
	22701-02	VY	SKIN - Wing panel, inboard, bottom, left	1	24-3558 and up
	22701-03	VY	SKIN - Wing panel, inboard, bottom, right	1	24-3558 and up
	20360-09	X	SKIN - Wing panel, inboard, bottom, right	1	24-2844 and up
	20360-08	X	SKIN - Wing panel, inboard, bottom, left	1	24-2844 and up
	22700-09	Z	SKIN - Wing panel, inboard, bottom, right	1	
	22700-08	Z	SKIN - Wing panel, inboard, bottom, left	1	
-12	20249-01	XY	SPAR - False, wing panel, right	1	24-1 to 24-2843 inclusive
	22751-05	VYZ	SPAR - False, wing panel, right, inboard	1	24-2844 to 24-4475, 26-2 and up
	22751-03	VYZ	SPAR - False, wing panel, right, center	1	24-2844 to 24-4475, 26-2 and up
	22751-07	VYZ	SPAR - False, wing panel, right, outboard	1	24-2844 to 24-4475, 26-2 and up
	20249-00	XY	SPAR - False, wing panel, left	1	24-1 to 24-2843 inclusive
	22751-04	VYZ	SPAR - False, wing panel, left, inboard	1	24-2844 to 24-4482, 26-2 and up
	22751-02	VYZ	SPAR - False, wing panel, left, center	1	24-2844 to 24-4482, 26-2 and up
	22751-06	VYZ	SPAR - False, wing panel, left, outboard	1	24-2844 to 24-4482, 26-2 and up
	20249-01	X	SPAR - False, wing panel, right	1	24-2844 and up
	20249-00	X	SPAR - False, wing panel, left	1	24-2844 and up
	25867-05	V	SPAR - False, wing panel, right, inboard	1	24-4476 and up
	25867-04	V	SPAR - False, wing panel, left, inboard	1	24-4483 and up
	25867-03	V	SPAR - False, wing panel, right, center	1	24-4476 and up
	25867-02	V	SPAR - False, wing panel, left, center	1	24-4483 and up
	25867-07	V	SPAR - False, wing panel, right, outboard	1	24-4476 and up
	25867-06	V	SPAR - False, wing panel, left, outboard	1	24-4483 and up

V - Used on PA-24-260 airplanes only.
X - Used on PA-24-180 airplanes only.
Y - Used on PA-24-250 airplanes only.
Z - Used on PA-24-400 airplanes only.

Figure and Index Number	Part Number	Code	NOMENCLATURE	No. Req.	SERIAL NUMBERS AFFECTED
4-13	20377-19	XY	SKIN - Wing panel, outboard, top, right	1	24-1 to 24-2843 inclusive
	22700-07	VYZ	SKIN - Wing panel, outboard, top, right	1	24-2844 and up, 26-2 and up
	20377-18	XY	SKIN - Wing panel, outboard, top, left	1	24-1 to 24-2843 inclusive
	22700-06	VYZ	SKIN - Wing panel, outboard, top, left	1	24-2844 and up, 26-2 and up
	20377-19	X	SKIN - Wing panel, outboard, top, right	1	24-2844 and up
	20377-18	X	SKIN - Wing panel, outboard, top, left	1	24-2844 and up
-14	20377-21	XY	SKIN - Wing panel, center, top, right	1	24-1 to 24-2843 inclusive
	22700-05	VYZ	SKIN - Wing panel, center, top, right	1	24-2844 and up, 26-2 and up
	20377-20	XY	SKIN - Wing panel, center, top, left	1	24-1 to 24-2843 inclusive
	22700-04	VYZ	SKIN - Wing panel, center, top, left	1	24-2844 and up, 26-2 and up
	20377-21	X	SKIN - Wing panel, center, top, right	1	24-2844 and up
	20377-20	X	SKIN - Wing panel, center, top, left	1	24-2844 and up
-15	20360-05	XY	SKIN - Wing panel, inboard, top, right	1	24-1 to 24-2843 inclusive
	22700-03	VYZ	SKIN - Wing panel, inboard, top, right	1	24-2844 and up, 26-2 and up
	20360-04	XY	SKIN - Wing panel, inboard, top, left	1	24-1 to 24-2843 inclusive
	22700-02	VYZ	SKIN - Wing panel, inboard, top, left	1	24-2844 and up, 26-2 and up
	20360-05	X	SKIN - Wing panel, inboard, top, right	1	24-2844 and up
	20360-04	X	SKIN - Wing panel, inboard, top, left	1	24-2844 and up
-16	17316-00		PLATE - Aileron bellcrank access	2	
-17	20370-00		PLATE - Access hole cover	2	
-18	20632-00	VXY	PLATE - Wing access	2	
	23474-00	Z	PLATE - Wing access	2	
-19	21705-00	VXY	STRIP	2	
-20	22998-02	VYZ	PLATE - Flap bellcrank access, left	1	24-2844 and up, 26-2 and up
	22998-03	VYZ	PLATE - Flap bellcrank access, right	1	24-2844 and up, 26-2 and up
-21	24614-00	Z	PLATE - Wing access, left	1	
	24614-01	Z	PLATE - Wing access, right	1	
-22	24735-00	VZ	PLATE - Air inlet	2	
-23	24736-00	VZ	SCREEN - Air inlet	2	
-24	17315-00		PLATE - Reinforcement	1	
-25	20372-00		PLATE - Reinforcement	1	
-26	22303-02	BVY	PLATE - Fuel cell access hole cover	2	
-27	20366-00	A	GASKET - Fuel cell access hole cover	2	
-28	27065-00	VYZ	PLATE ASSEMBLY - Reinforcement, lift detector	1	

A - Used on PA-24-250 with serial numbers 24-2299 and up. PA-24-260 with serial numbers 24-3642, 24-4000 to 24-4782, 24-4784 to 24-4803 inclusive, and PA-24-400 with serial numbers 26-2 and up.
B - Refer to Figure 30C if Auxiliary Fuel System is installed.
V - Used on PA-24-260 airplanes only.
X - Used on PA-24-180 airplanes only.
Y - Used on PA-24-250 airplanes only.
Z - Used on PA-24-400 airplanes only.

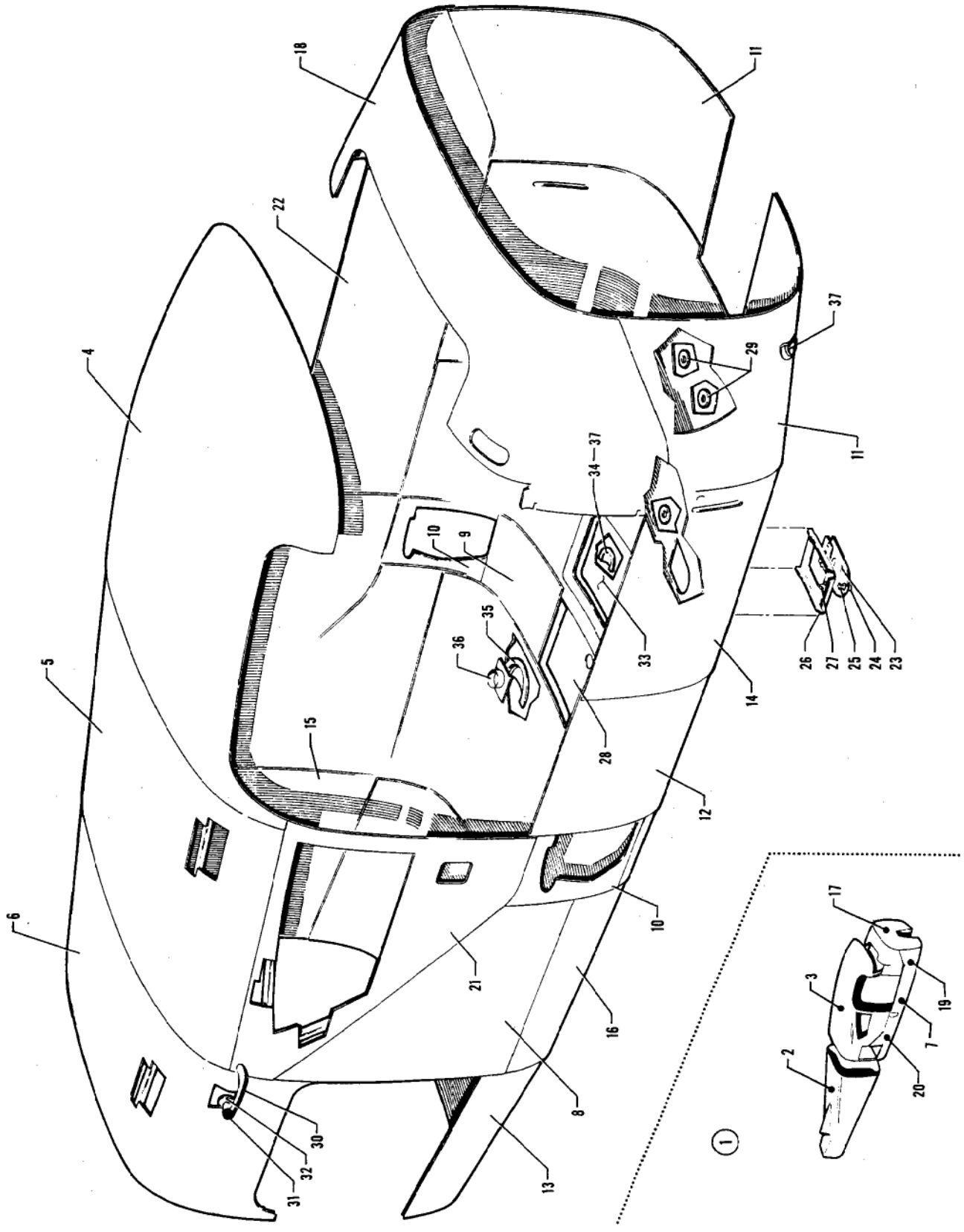

Figure 5. Complete Fuselage

PILOTEN-SERVICE
Straubing LBA II-A-170
Telefon (09429) 716

Figure and Index Number	Part Number	Code	NOMENCLATURE	No. Req.	SERIAL NUMBERS AFFECTED
5-	20940	D	DRAWING - Fuselage Assembly (Complete)		
	23120	E	DRAWING - Fuselage Assembly (Complete)		
	24264	Z	DRAWING - Fuselage Assembly (Complete)		
	24879	V	DRAWING - Fuselage Assembly (Complete)		
	20600	F	DRAWING - Fuselage Assembly		
	22400	G	DRAWING - Fuselage Assembly		
	23058	E	DRAWING - Fuselage Assembly		
	22690	Z	DRAWING - Fuselage Assembly		
	24722	V	DRAWING - Fuselage Assembly		
-1	20600-00		FUSELAGE ASSEMBLY	1	24-1 to 24-102 inclusive
	20600-123		FUSELAGE ASSEMBLY	1	24-103 to 24-1329 inclusive
	20600-137		FUSELAGE ASSEMBLY	1	24-1330 to 24-2174 inclusive, 24-2176 to 24-2201 inclusive
	20600-146		FUSELAGE ASSEMBLY	1	24-2202 to 24-2298 inclusive
	22400-00	G	FUSELAGE ASSEMBLY	1	
	23058-00	Y	FUSELAGE ASSEMBLY	1	24-2844 and up
	23058-02	X	FUSELAGE ASSEMBLY	1	24-3285 and up
	22690-00	Z	FUSELAGE ASSEMBLY	1	26-2 to 26-124 inclusive
	22690-12	Z	FUSELAGE ASSEMBLY	1	26-125 and up
	24722-00	V	FUSELAGE ASSEMBLY	1	
-2	20500-00	BX	AFT SECTION ASSEMBLY	1	24-1 to 24-102 inclusive
	20500-48	BXY	AFT SECTION ASSEMBLY	1	24-103 to 24-1329 inclusive
	20500-56	BC	AFT SECTION ASSEMBLY	1	
	22233-00	BG	AFT SECTION ASSEMBLY	1	
	22233-06	BE	AFT SECTION ASSEMBLY	1	
	22573-00	BZ	AFT SECTION ASSEMBLY	1	
	24721-00	BV	AFT SECTION ASSEMBLY	1	

A - Used on PA-24-180 and PA-24-250 with serial numbers 24-1 and up, PA-24-260 with serial numbers 24-3642, 24-4000 to 24-4246, 24-4248 to 24-4299 inclusive, and PA-24-400 with serial numbers 26-2 and up.
B - See Figure 6 for component parts.
C - Used on PA-24-180 and PA-24-250 with serial numbers 24-1330 to 24-2174, 24-2176 to 24-2298 inclusive.
D - Used on PA-24-180 with serial numbers 24-1 to 24-3284 and PA-24-250 with serial numbers 24-105 to 24-2843 inclusive.
E - Used on PA-24-180 with serial numbers 24-3285 and up, and PA-24-250 with serial numbers 24-2844 and up.
F - Used on PA-24-180 and PA-24-250 with serial numbers 24-1 to 24-2174, 24-2176 to 24-2298 inclusive.
G - Used on PA-24-180 with serial numbers 24-2299 to 24-3284 and PA-24-250 with serial numbers 24-2175, 24-2299 to 24-2843 inclusive.
V - Used on PA-24-260 airplanes only.
X - Used on PA-24-180 airplanes only.
Y - Used on PA-24-250 airplanes only.
Z - Used on PA-24-400 airplanes only.

Figure and Index Number	Part Number	Code	NOMENCLATURE	No. Req.	SERIAL NUMBERS AFFECTED
5-3	20600-86	XY	FUSELAGE TOP SECTION ASSEMBLY	1	24-1 to 24-1329 inclusive
	20600-141	XY	FUSELAGE TOP SECTION ASSEMBLY	1	24-1330 to 24-2174 inclusive, 24-2176 to 24-2201 inclusive
	23045-00	E	FUSELAGE TOP SECTION ASSEMBLY	1	
	22566-00	VZ	FUSELAGE TOP SECTION ASSEMBLY	1	
-4	20600-09		SKIN - Fuselage top forward	1	
-5	20600-87		SKIN ASSEMBLY - Fuselage top center	1	
-6	20600-88	XY	SKIN ASSEMBLY - Fuselage top rear	1	
	22566-06	VZ	SKIN ASSEMBLY - Fuselage top rear	1	
-7	20600-100	X	FUSELAGE BOTTOM SECTION ASSEMBLY	1	24-1 to 24-102 inclusive
	20600-121	XY	FUSELAGE BOTTOM SECTION ASSEMBLY	1	24-103 to 24-1329 inclusive
	20600-142	XY	FUSELAGE BOTTOM SECTION ASSEMBLY	1	24-1330 to 24-2174 inclusive, 24-2176 to 24-2201 inclusive
	20600-148	XY	FUSELAGE BOTTOM SECTION ASSEMBLY	1	24-2202 to 24-2298 inclusive
	22232-00	B	FUSELAGE BOTTOM SECTION ASSEMBLY	1	
	23056-00	C	FUSELAGE BOTTOM SECTION ASSEMBLY	1	
	22607-00	Z	FUSELAGE BOTTOM SECTION ASSEMBLY	1	26-2 to 26-124 inclusive
	22607-32	Z	FUSELAGE BOTTOM SECTION ASSEMBLY	1	26-125 and up
	24792-00	V	FUSELAGE BOTTOM SECTION ASSEMBLY	1	
-8	20600-12		SKIN - Side, center rear, LH	1	
	20600-11		SKIN - Side, center rear, RH	1	
-9	20600-16		SKIN - Side, bottom center rear, LH	1	
	20600-15		SKIN - Side, bottom center rear, RH	1	
-10	20615-02	X	SKIN - Fuselage, Sta. 105 to Sta. 113, LH	1	24-1 to 24-102 inclusive
	20615-04		SKIN - Fuselage, Sta. 105 to Sta. 113, LH	1	24-103 and up
	20615-03		SKIN - Fuselage, Sta. 105 to Sta. 113, RH	1	
-11	20600-14		SKIN - Left side bottom front	1	
	20600-85		SKIN - Right side bottom front	1	24-1 to 24-2843, 26-2 and up
	23056-04	VXY	SKIN - Right side bottom front	1	24-2844 and up
-12	20600-19	D	SKIN - Bottom, center	1	
	22232-02	B	SKIN - Bottom, center	1	
	23056-02	CV	SKIN - Bottom, center	1	
	22607-25	Z	SKIN - Bottom, center	1	
-13	20600-102	VXY	SKIN ASSEMBLY - Bottom, rear	1	
	22607-05	Z	SKIN ASSEMBLY - Bottom, rear	1	
-14	20600-13	XY	SKIN - Bottom front center	1	
	22607-31	VZ	SKIN - Bottom front center	1	

A - Used on PA-24-180 and PA-24-250 with serial numbers 24-1 and up, PA-24-260 with serial numbers 24-3642, 24-4000 to 24-4246 inclusive, 24-4248 to 24-4299 inclusive, and PA-24-400 with serial numbers 26-2 and up.
B - Used on PA-24-180 with serial numbers 24-2299 to 24-3284 inclusive, and PA-24-250 with serial numbers 24-2175, 24-2299 to 24-2843 inclusive.
C - Used on PA-24-180 with serial numbers 24-3285 and up, and PA-24-250 with serial numbers 24-2844 and up.
D - Used on PA-24-180 and PA-24-250 with serial numbers 24-1 to 24-2174 inclusive, 24-2176 to 24-2298 inclusive.
E - Used on PA-24-180 with serial numbers 24-2202 to 24-3284 inclusive, and PA-24-250 with serial numbers 24-2175, 24-2202 to 24-2843 inclusive.
V - Used on PA-24-260 airplanes only.
X - Used on PA-24-180 airplanes only.
Y - Used on PA-24-250 airplanes only.
Z - Used on PA-24-400 airplanes only.

Figure and Index Number	Part Number	Code	NOMENCLATURE	No. Req.	SERIAL NUMBERS AFFECTED
5-15	20600-95	VXY	SKIN ASSEMBLY - Left side rear	1	
	22607-03	Z	SKIN ASSEMBLY - Left side rear	1	
-16	20600-17	XY	SKIN - Bottom, center rear	1	24-1 to 24-2174 inclusive, 24-2176 to 24-2201 inclusive
	20600-147	J	SKIN - Bottom, center rear	1	
	23056-03	CV	SKIN - Bottom, center rear	1	
	22607-30	Z	SKIN - Bottom, center rear	1	
-17	20600-109	EX	FIREWALL AND INSTRUMENT PANEL ASSEMBLY	1	24-1 to 24-102 inclusive
	20600-119	EXY	FIREWALL AND INSTRUMENT PANEL ASSEMBLY	1	24-103 to 24-1329 inclusive
	20600-143	EXY	FIREWALL AND INSTRUMENT PANEL ASSEMBLY	1	24-1330 to 24-2174 inclusive, 24-2176 to 24-2201 inclusive
	20600-149	EXY	FIREWALL AND INSTRUMENT PANEL ASSEMBLY	1	24-2202 to 24-2298 inclusive
	22228-00	BE	FIREWALL AND INSTRUMENT PANEL ASSEMBLY	1	
	23068-00	CE	FIREWALL AND INSTRUMENT PANEL ASSEMBLY	1	
	22579-00	EZ	FIREWALL AND INSTRUMENT PANEL ASSEMBLY	1	
	23068-02	EV	FIREWALL AND INSTRUMENT PANEL ASSEMBLY	1	
-18	20600-105	D	SKIN ASSEMBLY - Top front	1	
	22228-03	VXY	SKIN ASSEMBLY - Top front	1	24-2175, 24-2299 and up
	22579-03	Z	SKIN ASSEMBLY - Top front	1	
-19	20600-91	DF	FRAME ASSEMBLY - Fuselage, front	1	
	22247-00	BF	FRAME ASSEMBLY - Fuselage, front	1	
	23062-00	FH	FRAME ASSEMBLY - Fuselage, front	1	
	22629-00	FZ	FRAME ASSEMBLY - Fuselage, front	1	
-20	20600-92	BDG	FRAME ASSEMBLY - Fuselage, rear	1	
	23055-00	CG	FRAME ASSEMBLY - Fuselage, rear	1	
	22620-20	GZ	FRAME ASSEMBLY - Fuselage, rear	1	26-2 to 26-124 inclusive
	22620-22	GZ	FRAME ASSEMBLY - Fuselage, rear	1	26-125 and up
	24831-00	GV	FRAME ASSEMBLY - Fuselage, rear	1	

A - Used on PA-24-180 and PA-24-250 with serial numbers 24-1 and up, PA-24-260 with serial numbers 24-3642, 24-4000 to 24-4246 inclusive, 24-4248 to 24-4299 inclusive, and PA-24-400 with serial numbers 26-2 and up.
B - Used on PA-24-180 with serial numbers 24-2299 to 24-3284 inclusive, and PA-24-250 with serial numbers 24-2175, 24-2299 to 24-2843 inclusive.
C - Used on PA-24-180 with serial numbers 24-3285 and up, and PA-24-250 with serial numbers 24-2844 and up.
D - Used on PA-24-180 and PA-24-250 with serial numbers 24-1 to 24-2174, 24-2176 to 24-2298 inclusive.
E - See Figure 5G for component parts.
F - See Figure 5D for component parts.
G - See Figure 5E for component parts.
H - Used on PA-24-180 with serial numbers 24-3285 and up, PA-24-250 with serial numbers 24-2844 and up, and PA-24-260 airplanes.
J - Used on PA-24-180 with serial numbers 24-2202 to 24-3284 and PA-24-250 with serial numbers 24-2175, 24-2202 to 24-2843 inclusive.
V - Used on PA-24-260 airplanes only.
X - Used on PA-24-180 airplanes only.
Y - Used on PA-24-250 airplanes only.
Z - Used on PA-24-400 airplanes only.

Figure and Index Number	Part Number	Code	NOMENCLATURE	No. Req.	SERIAL NUMBERS AFFECTED
5-21	20600-04	X	SKIN - Rear window, left	1	24-1 to 24-102 inclusive
	20600-116	XY	SKIN - Rear window, left	1	24-103 and up
	23680-06	VZ	SKIN - Rear window, left	1	
	20600-05	XY	SKIN - Rear window, right	1	
	23680-05	VZ	SKIN - Rear window, right	1	
-22	20600-07	X	SKIN - Left side window, lower	1	24-1 to 24-102 inclusive
	20600-120	XY	SKIN - Left side window, lower	1	24-103 and up
	23680-08	VZ	SKIN - Left side window, lower	1	
-23	20898-00	B	PLATE ASSEMBLY - Fuel strainer access	1	
-24	487 588	B	STUD - (#2600-1W)	1	
-25	494 060	B	WASHER - (#2600-LW)	1	
-26	20893-00	B	PLATE ASSEMBLY - Fuel strainer access reinforcement	1	
	22257-00	VXY	PLATE ASSEMBLY - Fuel strainer access reinforcement	1	24-2175, 24-2299 and up
-27	484 342	B	RECEPTACLE - (#212-120)	1	
-28	20555-00	XY	PLATE ASSEMBLY - Fuselage bottom cover	1	24-1 to 24-2201 inclusive
	20555-03		PLATE ASSEMBLY - Fuselage bottom cover (with vent)	1	24-2202 to 24-2534 inclusive
	20555-02		PLATE ASSEMBLY - Fuselage bottom cover	1	24-2535 and up, 26-2 and up
-29	463 372	XYZ	GROMMET - Air vent (AN231-A4)	3	
	463 391	V	GROMMET - Air vent (AN231-4)	4	
-30	18514-00	XY	HANDLE - Cabin assist	1	24-1 to 24-454 inclusive
	66537-00		HANDLE - Cabin assist (464 036)	1	24-455 and up
-31	453 644	XY	BUMPER - Rubber	1	24-1 to 24-454 inclusive
-32	81342-72		WASHER - Cabin assist handle	1	
-33	22520-00	VXY	PLATE ASSEMBLY - Fuel strainer access	1	24-2175, 24-2299 and up
	24540-00	Z	PLATE ASSEMBLY - Fuel selector valve access	1	
-34	22090-00	V	PLATE - Vent	1	
-35	22117-00		SCOOP - Cabin air	1	24-2202 and up
-36	22122-00		TAKE-OFF ASSEMBLY - Cabin air exhaust	1	24-2202 and up
-37	22090-00	Z	PLATE - Vent	2	

A - Used on PA-24-180 and PA-24-250 with serial numbers 24-1 and up, PA-24-260 with serial numbers 24-3642, 24-4000 to 24-4246 inclusive, 24-4248 to 24-4299 inclusive, and PA-24-400 with serial numbers 26-2 and up.
B - Used on PA-24-180 and PA-24-250 with serial numbers 24-1 to 24-2174, 24-2176 to 24-2298 inclusive.
V - Used on PA-24-260 airplanes only.
X - Used on PA-24-180 airplanes only.
Y - Used on PA-24-250 airplanes only.
Z - Used on PA-24-400 airplanes only.

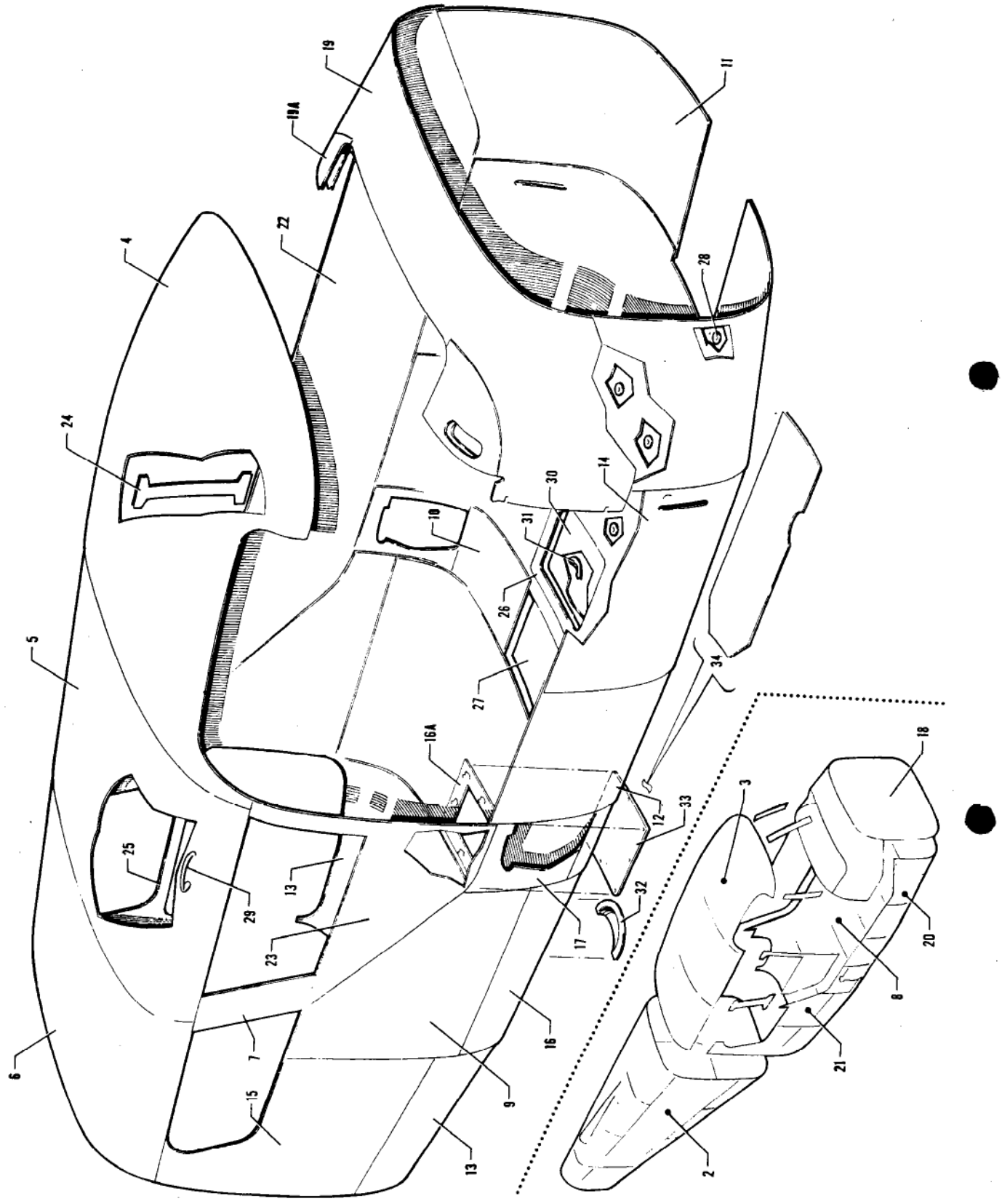

Figure 5A. Complete Fuselage

Figure and Index Number	Part Number	Code	NOMENCLATURE	No. Req.	SERIAL NUMBERS AFFECTED
5A-	25525	D	DRAWING - Fuselage Assembly (Complete)		
	26728		DRAWING - Fuselage Assembly (Complete)		24-4783, 24-4804 and up
	25461	D	DRAWING - Fuselage Assembly		
	26460		DRAWING - Fuselage Assembly		24-4783, 24-4804 and up
-1	25461-00	D	FUSELAGE ASSEMBLY	1	
	26460-00		FUSELAGE ASSEMBLY	1	24-4783, 24-4804 to 24-5018 incl.
	26460-02		FUSELAGE ASSEMBLY	1	24-5019 and up
-2	25385-00	BD	AFT SECTION ASSEMBLY	1	
	26259-00	B	AFT SECTION ASSEMBLY	1	24-4783, 24-4804 and up
-3	25355-00	C	FUSELAGE TOP SECTION ASSEMBLY	1	24-4247, 24-4300 to 24-4699 incl.
	25355-08	C	FUSELAGE TOP SECTION ASSEMBLY	1	24-4700 and up
-4	20600-09		SKIN - Fuselage top, forward	1	
-5	25355-03		SKIN ASSEMBLY - Fuselage top, center	1	
-6	25355-06		SKIN ASSEMBLY - Fuselage top, rear	1	
-7	25461-02		SKIN - Fuselage top, side, left	1	
	25461-09		SKIN - Fuselage top, side, right	1	
-8	25382-00	D	FUSELAGE BOTTOM SECTION ASSEMBLY	1	
	26360-00		FUSELAGE BOTTOM SECTION ASSEMBLY	1	24-4783, 24-4804 to 24-5018 incl.
	26360-07		FUSELAGE BOTTOM SECTION ASSEMBLY	1	24-5019 and up
-9	25383-06		SKIN - Side, center, LH	1	
	25383-07		SKIN - Side, center, RH	1	
-10	20600-15		SKIN - Side, bottom center rear, LH	1	
	20600-16		SKIN - Side, bottom center rear, RH	1	
-11	20600-14		SKIN - Left side, bottom front	1	
	23056-04		SKIN - Right side, bottom front	1	
-12	23056-02		SKIN - Bottom, center	1	
-13	25383-02		SKIN - Bottom, rear	1	
-14	22607-31		SKIN - Bottom front, center	1	24-4247, 24-4300 to 24-4596
	25382-05		SKIN - Bottom front, center	1	24-4597 to 24-4782 inclusive, 24-4784 to 24-4803 inclusive
	26360-05		SKIN - Bottom front, center	1	24-4783, 24-4804 and up
-15	25383-05		SKIN ASSEMBLY - Right side, rear	1	
-16	25382-05		SKIN - Bottom center, rear	1	24-4247, 24-4300 to 24-4703
	25382-07	A	SKIN ASSEMBLY - Bottom center, rear	1	
	26360-02		SKIN - Bottom center, rear, left	1	24-4783, 24-4804 and up
	26360-03		SKIN - Bottom center, rear, right	1	24-4783, 24-4804 and up
-16a	17315-00	A	PLATE ASSEMBLY - Reinforcement	1	
-17	20615-04		SKIN - Fuselage, Sta. 105 to Sta. 113, LH	1	
	20615-03		SKIN - Fuselage, Sta. 105 to Sta. 113, RH	1	

A - Used on PA-24-260 with serial numbers 24-4704 to 24-4782, 24-4784 to 24-4803 inclusive.
B - See Figure 6 for component parts.
C - See Figure 5C for component parts.
D - Used on PA-24-260 with serial numbers 24-4247, 24-4300 to 24-4782, 24-4784 to 24-4803 inclusive.

Figure and Index Number	Part Number	Code	NOMENCLATURE	No. Req.	SERIAL NUMBERS AFFECTED
5A-18	23068-03	E	FIREWALL AND INSTRUMENT PANEL ASSEMBLY	1	24-4247, 24-4300 to 24-4768 incl.
	26340-00	E	FIREWALL AND INSTRUMENT PANEL ASSEMBLY	1	24-4769 to 24-4782 inclusive, 24-4784 to 24-4803 inclusive
	26468-00	E	FIREWALL AND INSTRUMENT PANEL ASSEMBLY	1	24-4783, 24-4804 to 24-5018 incl.
	26468-04	E	FIREWALL AND INSTRUMENT PANEL ASSEMBLY	1	24-5019 and up
-19	22579-03	D	SKIN ASSEMBLY - Top front	1	
	26468-03		SKIN ASSEMBLY - Top front	1	24-4783, 24-4804 to 24-5018 incl.
	26468-05		SKIN ASSEMBLY - Top front	1	24-5019 and up
-19a	26498-00		SKIN - Top front, left	1	24-4783, 24-4804 and up
	26498-01		SKIN - Top front, right	1	24-4783, 24-4804 and up
-20	23062-00	BC	FRAME ASSEMBLY - Fuselage, front	1	
	23062-02	B	FRAME ASSEMBLY - Fuselage, front	1	24-4783, 24-4804 and up
-21	25333-14	A	FRAME ASSEMBLY - Fuselage, rear	1	24-4247, 24-4300 to 24-4566 incl.
	25333-00	A	FRAME ASSEMBLY - Fuselage, rear	1	24-4567 to 24-4782 inclusive, 24-4784 to 24-4803 inclusive
	25333-17	A	FRAME ASSEMBLY - Fuselage, rear	1	24-4783, 24-4804 and up
-22	26380-08		SKIN - Front window, left	1	
-23	25461-04		SKIN - Center window, left	1	
	25461-05		SKIN - Center window, right	1	
-24	25461-03		SKIN - Top side, left	1	
-25	25461-06		SKIN - Left side, rear	1	
-26	22257-00		PLATE ASSEMBLY - Fuel strainer access reinforcement	1	
-27	20555-02	C	PLATE ASSEMBLY - Fuselage bottom cover	1	
-28	463 391		GROMMET - Air vent (AN231-4)	4	
-29	66537-00		HANDLE - Cabin assist (464 036)	1	
-30	22520-00		PLATE ASSEMBLY - Fuel strainer access	1	
-31	22090-00		PLATE - Vent	1	
-32	22117-00		SCOOP - Cabin air	1	
-33	17316-00	D	PLATE - Access hole cover	1	
-34	25880-00		PLATE ASSEMBLY - Fuselage bottom cover	1	24-4783, 24-4804 and up

A - See Figure 5F for component parts.
B - See Figure 5D for component parts.
C - Used on PA-24-260 with serial numbers 24-4247, 24-4300 to 24-4782, 24-4784 to 24-4803 inclusive.
D - Used on PA-24-260 with serial numbers 24-4704 to 24-4782, 24-4784 to 24-4803 inclusive.
E - See Figure 5G for component parts.

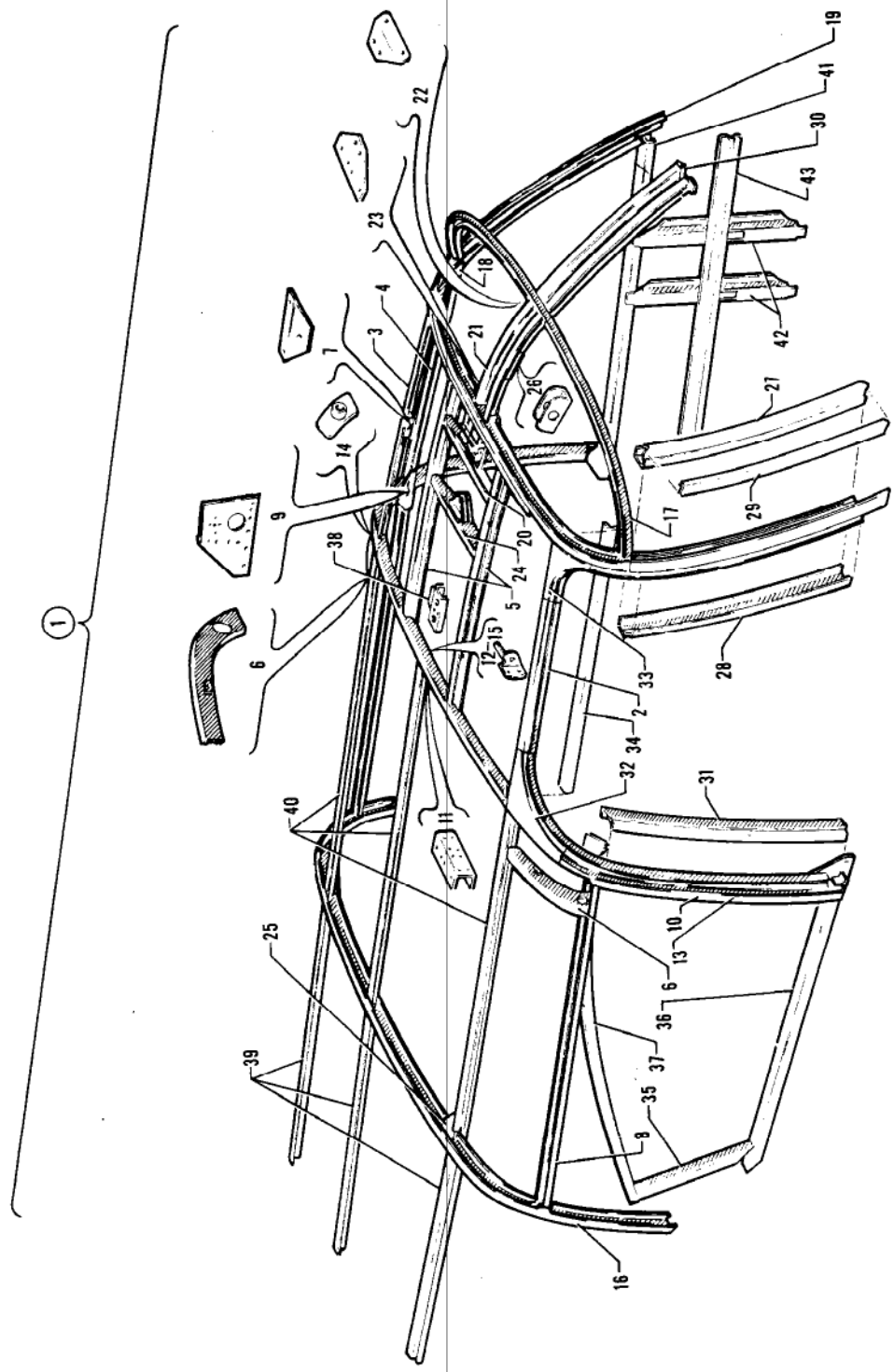

Figure 5B. Fuselage Top Section

Figure and Index Number	Part Number	Code	NOMENCLATURE	No. Req.	SERIAL NUMBERS AFFECTED
5B-	20600	D	DRAWING - Fuselage Cabin Top		
	23045	B	DRAWING - Fuselage Cabin Top		
	22566	VZ	DRAWING - Fuselage Cabin Top		
-1	20600-86	XY	SECTION ASSEMBLY - Fuselage cabin top	1	24-1 to 24-1329 inclusive
	20600-141	C	SECTION ASSEMBLY - Fuselage cabin top	1	
	23045-00	B	SECTION ASSEMBLY - Fuselage cabin top	1	
	22566-00	VZ	SECTION ASSEMBLY - Fuselage cabin top	1	
-2	20600-38		CHANNEL - Fuselage Sta. 80 to Sta. 105, top, right	1	
-3	20600-24		STRINGER - Fuselage Sta. 80 to Sta. 105, top, left	1	
-4	20600-89		CHANNEL ASSEMBLY - Fuselage Sta. 78 to Sta. 105, top, left	1	
-5	20600-135		CHANNEL ASSEMBLY - Fuselage Sta. 80 to Sta. 105, top, right	1	
	20600-136		CHANNEL ASSEMBLY - Fuselage Sta. 80 to Sta. 105, top, left	1	
-6	23283-00		BULKHEAD ASSEMBLY - Sta. 107, left	1	24-2844 and up, 26-2 and up
	23283-01		BULKHEAD ASSEMBLY - Sta. 107, right	1	24-2844 and up, 26-2 and up
-7	20457-00		BRACKET - Wire clamp	1	
-8	20507-00		CHANNEL - Fuselage center section, top rear, left	1	
	20507-01		CHANNEL - Fuselage center section, top rear, right	1	
-9	17217-00	XY	GUSSET ASSEMBLY - Fuselage top, left	1	24-1 to 24-2843 inclusive
	18072-00	XY	GUSSET ASSEMBLY - Fuselage top, right	1	24-1 to 24-2843 inclusive
	23284-00		GUSSET ASSEMBLY - Fuselage top, right	1	24-2844 and up, 26-2 and up
	23285-00		GUSSET ASSEMBLY - Fuselage top, left	1	24-2844 and up, 26-2 and up
-10	20539-18	XY	CHANNEL ASSEMBLY - Fuselage Sta. 105	1	24-1 to 24-1329 inclusive
	20539-23	XY	CHANNEL ASSEMBLY - Fuselage Sta. 105	1	24-1330 to 24-2843 inclusive
	22582-03	XY	CHANNEL ASSEMBLY - Fuselage Sta. 105	1	24-2844 to 24-3493 inclusive
	23675-02		CHANNEL ASSEMBLY - Fuselage Sta. 105	1	24-3494 to 24-4043 inclusive, 26-2 to 26-124 inclusive
	23675-09	VZ	CHANNEL ASSEMBLY - Fuselage Sta. 105	1	24-4044 and up, 26-125 and up
-11	20539-07		CHANNEL - Fuselage Sta. 105, top	1	
-12	20533-00	XY	BRACKET - Pulley, top, left	1	24-1 to 24-3493 inclusive
	20533-01	XY	BRACKET - Pulley, top, right	1	24-1 to 24-3493 inclusive

A - Used on PA-24-180 and PA-24-250 with serial numbers 24-1 and up, PA-24-260 with serial numbers 24-3642, 24-4000 to 24-4246 inclusive, 24-4248 to 24-4299 inclusive, and PA-24-400 with serial numbers 26-2 and up.

B - Used on PA-24-180 with serial numbers 24-3285 and up, and PA-24-250 with serial numbers 24-2844 and up.

C - Used on PA-24-180 with serial numbers 24-1330 to 24-2174, 24-2176 to 24-3284 inclusive, and PA-24-250 with serial numbers 24-1330 to 24-2843 inclusive.

D - Used on PA-24-180 with serial numbers 24-1 to 24-2174, 24-2176 to 24-3284 inclusive, and PA-24-250 with serial numbers 24-105 to 24-2843 inclusive.

V - Used on PA-24-260 airplanes only.

X - Used on PA-24-180 airplanes only.

Y - Used on PA-24-250 airplanes only.

Z - Used on PA-24-400 airplanes only.

Figure and Index Number	Part Number	Code	NOMENCLATURE	No. Req.	SERIAL NUMBERS AFFECTED
5B-13	20539-03	XY	CHANNEL - Fuselage Sta. 105, left	1	24-1 to 24-1329 inclusive
	20539-24		CHANNEL - Fuselage Sta. 105, left	1	24-3494 to 24-4043 inclusive, 26-2 to 26-124 inclusive
	23675-10	VZ	CHANNEL - Fuselage Sta. 105, left	1	24-4044 and up, 26-125 and up
	20539-02	XY	CHANNEL - Fuselage Sta. 105, right	1	24-1 to 24-1329 inclusive
	22582-04		CHANNEL - Fuselage Sta. 105, right	1	24-3494 to 24-4043 inclusive, 26-2 to 26-124 inclusive
	23675-11	VZ	CHANNEL - Fuselage Sta. 105, right	1	24-4044 and up, 26-125 and up
-14	21930-00	XYZ	TUBE ASSEMBLY - Ventilator tube connector, left	1	24-1330 and up, 26-2 and up
-15	20533-00	XY	BRACKET - Pulley, top, left	1	24-3494 and up
	20533-01	XY	BRACKET - Pulley, top, right	1	24-3494 and up
-16	20554-24	XY	CHANNEL ASSEMBLY - Fuselage Sta. 136, top	1	24-1 to 24-1329 inclusive
	20544-29		CHANNEL ASSEMBLY - Fuselage Sta. 136, top	1	24-1330 to 24-4043 inclusive, 26-2 to 26-124 inclusive
	22606-08	VZ	CHANNEL ASSEMBLY - Fuselage Sta. 136, top	1	24-4044 and up, 26-125 and up
-17	20561-03		CHANNEL ASSEMBLY - Fuselage Sta. 70 to Sta. 78, top	1	
-18	20603-11		GUSSET	1	
-19	20603-13	XY	BULKHEAD ASSEMBLY - Fuselage Sta. 70 to Sta. 80	1	24-1 to 24-1329 inclusive
	20603-14		BULKHEAD ASSEMBLY - Fuselage Sta. 70 to Sta. 80	1	24-1330 to 24-4043 inclusive, 26-2 to 26-124 inclusive
	20603-22	VZ	BULKHEAD ASSEMBLY - Fuselage Sta. 70 to Sta. 80	1	24-4044 and up, 26-125 and up
-20	20977-03		BULKHEAD ASSEMBLY - Fuselage Sta. 80 to Sta. 83, top	1	
-21	20610-03	XY	CHANNEL - Fuselage Sta. 70 to Sta. 80, center	1	24-1 to 24-1329 inclusive
	20610-12		CHANNEL - Fuselage Sta. 70 to Sta. 80, center	1	24-1330 to 24-4043 inclusive, 26-2 to 26-124 inclusive
	20610-03	VZ	CHANNEL - Fuselage Sta. 70 to Sta. 80, center	1	24-4044 and up, 26-125 and up
-22	20610-04		GUSSET - Fuselage Sta. 70, top, center	1	
-23	20610-05		GUSSET - Fuselage Sta. 80, top, center	1	
-24	20977-02	XY	BULKHEAD ASSEMBLY - Fuselage Sta. 83, top	1	
	20977-06	VZ	BULKHEAD ASSEMBLY - Fuselage Sta. 83, top	1	
-25	21560-00		GUSSET ASSEMBLY - Fuselage Sta. 136, top, left	1	
	21560-01		GUSSET ASSEMBLY - Fuselage Sta. 136, top, right	1	
-26	21936-00	VXY	CHANNEL - Reinforcement, top, center	1	24-1330 to 24-4043 inclusive
-27	20603-08		STRIP - Fuselage Sta. 70 to Sta. 78, top, left	1	
	20603-06		STRIP - Fuselage Sta. 70 to Sta. 78, top, right	1	
-28	20603-12		ANGLE ASSEMBLY - Fuselage Sta. 70 to Sta. 78, top, right	1	
-29	23288-00		STRIP - Moulding retainer, left	1	
	23288-01		STRIP - Moulding retainer, right	1	
-30	20610-02		CHANNEL - Fuselage Sta. 53 to Sta. 70, top, center	1	

A - Used on PA-24-180 and PA-24-250 with serial numbers 24-1 and up, PA-24-260 with serial numbers 24-3642, 24-4000 to 24-4246 inclusive, 24-4248 to 24-4299 inclusive, and PA-24-400 with serial numbers 26-2 and up.
B - Used on PA-24-180 with serial numbers 24-3285 and up, PA-24-250 with serial numbers 24-2844 and up, and PA-24-400 airplanes only.
V - Used on PA-24-260 airplanes only.
X - Used on PA-24-180 airplanes only.
Y - Used on PA-24-250 airplanes only.
Z - Used on PA-24-400 airplanes only.

Figure and Index Number	Part Number	Code	NOMENCLATURE	No. Req.	SERIAL NUMBERS AFFECTED
5B-31	20539-10	X	ANGLE ASSEMBLY - Fuselage Sta. 105, right	1	24-1 to 24-3284 inclusive
	20539-10	Y	ANGLE ASSEMBLY - Fuselage Sta. 105, right	1	24-105 to 24-2843 inclusive
	22582-07	B	ANGLE ASSEMBLY - Fuselage Sta. 105, right	1	
-32	20617-07		ANGLE ASSEMBLY - Fuselage Sta. 100 to Sta. 105, top, right	1	
-33	20617-06		ANGLE ASSEMBLY - Fuselage Sta. 80 to Sta. 84, top, right	1	
-34	20600-96		ANGLE ASSEMBLY - Fuselage Sta. 105, top, right	1	
-35	20600-78	XY	CHANNEL - Fuselage Sta. 128 to Sta. 132, left	1	24-1 to 24-3616 inclusive
	24551-00		CHANNEL - Fuselage Sta. 128 to Sta. 132, left	1	24-3617 and up, 26-2 and up
	20600-79	XY	CHANNEL - Fuselage Sta. 128 to Sta. 132, right	1	24-1 to 24-3616 inclusive
	24551-01		CHANNEL - Fuselage Sta. 128 to Sta. 132, right	1	24-3617 and up, 26-2 and up
-36	20600-32	XY	CHANNEL - Fuselage Sta. 105 to Sta. 132, left	1	24-1 to 24-3616 inclusive
	24553-00		CHANNEL - Fuselage Sta. 105 to Sta. 132, left	1	24-3617 and up, 26-2 and up
	20600-33	XY	CHANNEL - Fuselage Sta. 105 to Sta. 132, right	1	24-1 to 24-3616 inclusive
	24553-01		CHANNEL - Fuselage Sta. 105 to Sta. 132, right	1	24-3617 and up, 26-2 and up
-37	20600-40	XY	STRIP - Fuselage Sta. 105 to Sta. 132, left	1	24-1 to 24-3680 inclusive
	20600-39	XY	STRIP - Fuselage Sta. 105 to Sta. 132, right	1	24-1 to 24-3680 inclusive
	20600-40	Z	STRIP - Fuselage Sta. 105 to Sta. 132, left	1	24-2 to 26-11 inclusive
	20600-39	Z	STRIP - Fuselage Sta. 105 to Sta. 132, right	1	26-2 to 26-11 inclusive
	24755-00		STRIP - Fuselage Sta. 105 to Sta. 132, left	1	24-3681 and up, 26-12 and up
	24755-01		STRIP - Fuselage Sta. 105 to Sta. 132, right	1	24-3681 and up, 26-12 and up
-38	21307-00	B	BRACKET ASSEMBLY - Antenna mounting	1	
-39	20600-30		STRINGER - Fuselage Sta. 136 to Sta. 157, top	3	
-40	20600-134	XY	STRINGER ASSEMBLY - Fuselage Sta. 105 to Sta. 136, top	3	
	20600-25	VZ	STRINGER ASSEMBLY - Fuselage Sta. 105 to Sta. 136, top	3	
-41	20600-106	XY	CHANNEL ASSEMBLY - Sta. 66 to Sta. 105, LH	1	24-1 to 24-3616 inclusive
	23680-09		CHANNEL ASSEMBLY - Sta. 66 to Sta. 105, LH	1	24-3617 and up, 26-2 and up
-42	20521-02	XY	CHANNEL ASSEMBLY - Armrest support, front, LH	1	24-1 to 24-1329 inclusive
	20521-03	XY	CHANNEL ASSEMBLY - Armrest support, rear, LH	1	24-1 to 24-1329 inclusive
	22421-00		CHANNEL ASSEMBLY - Armrest support	2	24-1330 and up, 26-2 and up
-43	20600-125		CHANNEL - Fuselage Sta. 70 to Sta. 105, LH	1	

A - Used on PA-24-180 and PA-24-250 with serial numbers 24-1 and up, PA-24-260 with serial numbers 24-3642, 24-4000 to 24-4246 inclusive, 24-4248 to 24-4299 inclusive, and PA-24-400 with serial numbers 26-2 and up.
B - Used on PA-24-180 with serial numbers 24-3285 and up, PA-24-250 with serial numbers 24-2844 and up, and PA-24-400 airplanes.
V - Used on PA-24-260 airplanes only.
X - Used on PA-24-180 airplanes only.
Y - Used on PA-24-250 airplanes only.
Z - Used on PA-24-400 airplanes only.

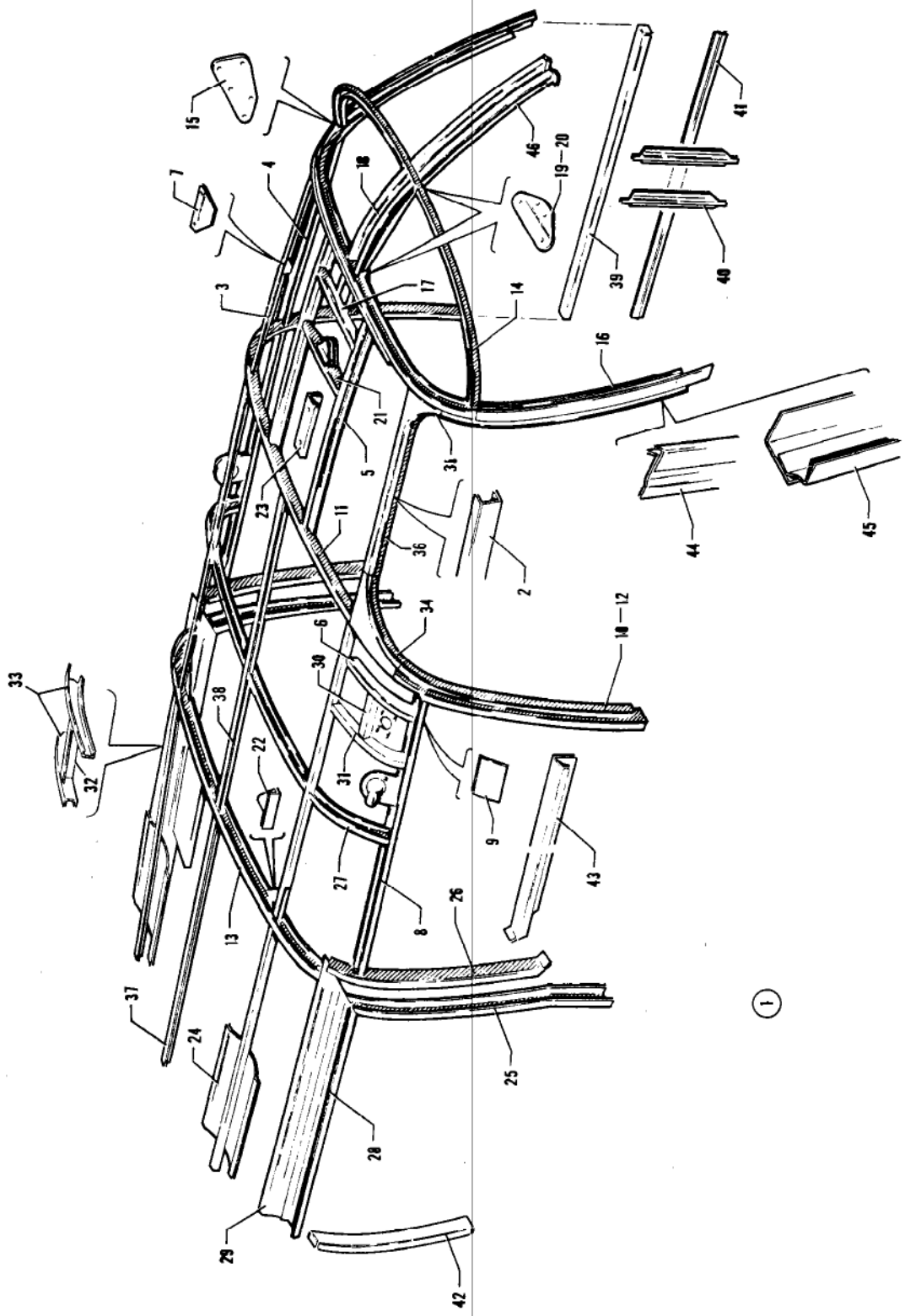

Figure 5C. Fuselage Top Section

Figure and Index Number	Part Number	Code	NOMENCLATURE	No. Req.	SERIAL NUMBERS AFFECTED
5C-	25355		DRAWING - Fuselage Cabin Top		
-1	25355-00		SECTION ASSEMBLY - Fuselage cabin top	1	24-4247, 24-4300 to 24-4699
	25355-08		SECTION ASSEMBLY - Fuselage cabin top	1	24-4700 and up
-2	20600-38		CHANNEL - Fuselage Sta. 80 to Sta. 105, top, right	1	
-3	20600-24		STRINGER - Fuselage Sta. 80 to Sta. 105, top, left	1	
-4	20600-34		CHANNEL ASSEMBLY - Fuselage Sta. 78 to Sta. 105, top, left	1	24-4247, 24-4300 to 24-4699
	25842-00		CHANNEL ASSEMBLY - Fuselage Sta. 78 to Sta. 105, top, left	1	24-4700 and up
-5	20600-135		CHANNEL ASSEMBLY - Fuselage Sta. 80 to Sta. 105, top, right	1	
	20600-136		CHANNEL ASSEMBLY - Fuselage Sta. 80 to Sta. 105, top, left	1	
-6	23283-00		BULKHEAD ASSEMBLY - Sta. 107, left	1	
	23283-01		BULKHEAD ASSEMBLY - Sta. 107, right	1	
-7	20457-00		BRACKET - Wire clamp	1	24-4247, 24-4300 to 24-5022 incl.
-8	25334-00		CHANNEL - Fuselage center section, top, rear, left	1	24-4247, 24-4300 to 24-4699
	25334-01		CHANNEL - Fuselage center section, top, rear, right	1	24-4247, 24-4300 to 24-4699
	25832-00		CHANNEL - Fuselage center section, top, rear, left	1	24-4700 and up
	25832-01		CHANNEL - Fuselage center section, top, rear, right	1	24-4700 and up
-9	23284-00		GUSSET ASSEMBLY - Fuselage top, right	1	
	23285-00		GUSSET ASSEMBLY - Fuselage top, left	1	
-10	23675-09		CHANNEL ASSEMBLY - Fuselage Sta. 105	1	
-11	20539-07		CHANNEL - Fuselage Sta. 105, top	1	
-12	23675-10		CHANNEL - Fuselage Sta. 105, left	1	
	23675-11		CHANNEL - Fuselage Sta. 105, right	1	
-13	25306-07		CHANNEL ASSEMBLY - Fuselage Sta. 136, top	1	
-14	20561-03		CHANNEL ASSEMBLY - Fuselage Sta. 70 to Sta. 78, top	1	
-15	20603-11		GUSSET	1	
-16	20603-22		BULKHEAD ASSEMBLY - Fuselage Sta. 70 to Sta. 80	1	
-17	20977-03		BULKHEAD ASSEMBLY - Fuselage Sta. 80 to Sta. 83, top	1	
-18	20610-03		CHANNEL - Fuselage Sta. 70 to Sta. 80, center	1	
-19	20610-04		GUSSET - Fuselage Sta. 70, top, center	1	
-20	20610-05		GUSSET - Fuselage Sta. 80, top, center	1	
-21	20977-06		BULKHEAD ASSEMBLY - Fuselage Sta. 83, top	1	
-22	21560-02		GUSSET ASSEMBLY - Fuselage Sta. 136, top, left	1	
	21560-03		GUSSET ASSEMBLY - Fuselage Sta. 136, top, right	1	
-23	21307-00		BRACKET ASSEMBLY - Antenna mounting	1	
-24	25344-00		CHANNEL - Head guard	2	
-25	25306-04		CHANNEL - Window, Sta. 136, left	1	
	25306-05		CHANNEL - Window, Sta. 136, right	1	
-26	25323-02		BULKHEAD - Sta. 128 to Sta. 133, left	1	
	25323-03		BULKHEAD - Sta. 128 to Sta. 133, right	1	
-27	25314-03		CHANNEL ASSEMBLY - Fuselage Sta. 121	1	
-28	25341-02		CHANNEL - Fuselage support, left	1	24-4247, 24-4300 to 24-4699
	25341-03		CHANNEL - Fuselage support, right	1	24-4247, 24-4300 to 24-4699
	25843-02		CHANNEL - Fuselage support, left	1	24-4700 and up
	25843-03		CHANNEL - Fuselage support, right	1	24-4700 and up
-29	25341-04		CHANNEL - Fuselage support, left	1	
	25341-05		CHANNEL - Fuselage support, right	1	

Figure and Index Number	Part Number	Code	NOMENCLATURE	No. Req.	SERIAL NUMBERS AFFECTED
5C-30	27002-00		BRACKET ASSEMBLY - Shoulder harness, left front	1	24-4922 and up
	27002-01		BRACKET ASSEMBLY - Shoulder harness, right front	1	24-4922 and up
-31	27003-00		BULKHEAD ASSEMBLY - Fuselage, Sta. 113, left	1	24-4922 and up
	27003-01		BULKHEAD ASSEMBLY - Fuselage, Sta. 113, right	1	24-4922 and up
-32	27001-00		BRACKET ASSEMBLY - Shoulder harness, center	2	24-4922 and up
-33	27005-00		BULKHEAD - Center shoulder harness, left rear, right front	2	24-4922 and up
	27005-01		BULKHEAD - Center shoulder harness, left front, right rear	2	24-4922 and up
-34	20617-07		ANGLE ASSEMBLY - Fuselage Sta. 100 to Sta. 105, top, right	1	
-35	20617-06		ANGLE ASSEMBLY - Fuselage Sta. 80 to Sta. 84, top, right	1	
-36	20600-96		ANGLE ASSEMBLY - Fuselage Sta. 105, top, right	1	
-37	25355-07		STRINGER - Fuselage Sta. 136 to Sta. 157, top	3	
-38	25355-04		STRINGER - Fuselage Sta. 105 to Sta. 136, top	3	
-39	23680-09		CHANNEL ASSEMBLY - Sta. 66 to Sta. 105, left	1	24-4247, 24-4300 to 24-4699 incl.
	25821-00		CHANNEL ASSEMBLY - Sta. 66 to Sta. 105, left	1	24-4700 and up
-40	22421-00		CHANNEL ASSEMBLY - Armrest support	2	
-41	20600-125		CHANNEL - Fuselage Sta. 70 to Sta. 105, left	1	
-42	25321-00		CHANNEL - Rear window, left	1	
	25321-01		CHANNEL - Rear window, right	1	
-43	25332-00		CHANNEL - Center window, left	1	24-4247, 24-4300 to 24-4699 incl.
	25332-01		CHANNEL - Center window, right	1	24-4247, 24-4300 to 24-4699 incl.
	26099-00		CHANNEL - Center window, left	1	24-4700 and up
	25829-01		CHANNEL - Center window, right	1	24-4700 and up
-44	20603-18		STRIP ASSEMBLY - Fuselage Sta. 70 to Sta. 78, top, left	1	
	20603-17		STRIP ASSEMBLY - Fuselage Sta. 70 to Sta. 78, top, right	1	
-45	20603-12		ANGLE ASSEMBLY - Fuselage Sta. 70 to Sta. 78, top, right	1	
-46	20610-02		CHANNEL - Fuselage Sta. 53 to Sta. 70, top, center	1	

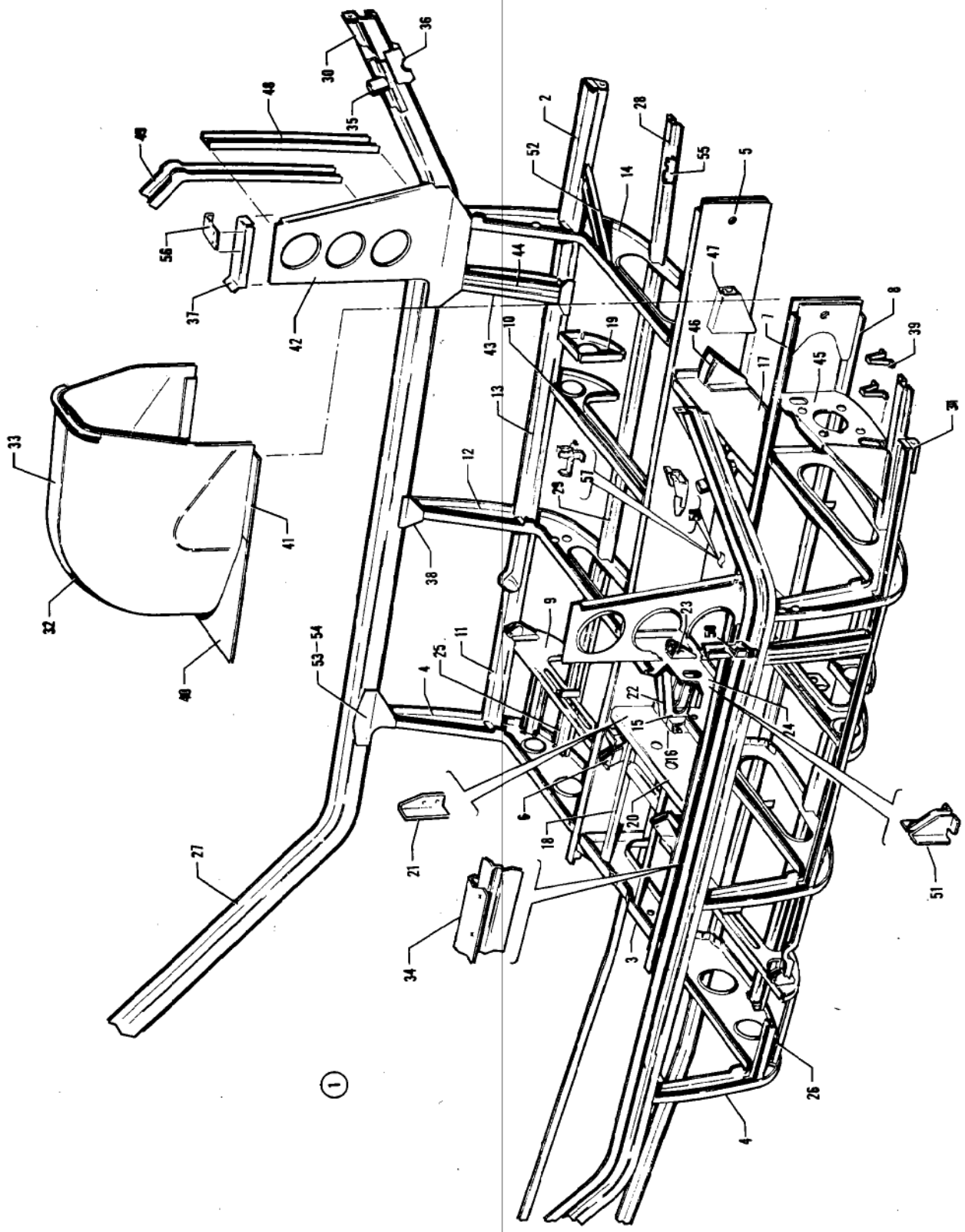

Figure 5D. Fuselage Front Frame Assembly

Figure and Index Number	Part Number	Code	NOMENCLATURE	No. Req.	SERIAL NUMBERS AFFECTED
5D-	20600	A	DRAWING - Frame Assembly, Fuselage, Front		
	22247	B	DRAWING - Frame Assembly, Fuselage, Front		
	23062	C	DRAWING - Frame Assembly, Fuselage, Front		
	22629	Z	DRAWING - Frame Assembly, Fuselage, Front		
-1	20600-91	A	FRAME ASSEMBLY - Fuselage, front	1	
	22247-00	B	FRAME ASSEMBLY - Fuselage, front	1	
	23062-00	D	FRAME ASSEMBLY - Fuselage, front	1	
	23062-02	V	FRAME ASSEMBLY - Fuselage, front	1	24-4783, 24-4804 and up
	22629-00	Z	FRAME ASSEMBLY - Fuselage, front	1	
-2	20600-48	A	STRINGER - Fuselage side, Sta. 49 to Sta. 66, left	1	
	22272-02	XY	STRINGER - Fuselage side, Sta. 49 to Sta. 66, left	1	24-2175, 24-2299 and up
	22272-06	VZ	STRINGER - Fuselage side, Sta. 49 to Sta. 66, left	1	
	20600-49	XY	STRINGER - Fuselage side, Sta. 49 to Sta. 66, right	1	
	22272-05	VZ	STRINGER - Fuselage side, Sta. 49 to Sta. 66, right	1	
-2	20539-19	XY	BULKHEAD ASSEMBLY - Fuselage, Sta. 105, bottom	1	24-1 to 24-3557 inclusive
	23675-05	E	BULKHEAD ASSEMBLY - Fuselage, Sta. 105, bottom	1	
	25977-03	V	BULKHEAD ASSEMBLY - Fuselage, Sta. 105, bottom	1	24-4783, 24-4804 and up
-4	20539-22	XY	BULKHEAD ASSEMBLY - Fuselage, Sta. 105, left	1	24-1 to 24-3557 inclusive
	23675-03	E	BULKHEAD ASSEMBLY - Fuselage, Sta. 105, left	1	
	23675-13	V	BULKHEAD ASSEMBLY - Fuselage, Sta. 105, left	1	24-4783, 24-4804 and up
	20539-21	XY	BULKHEAD ASSEMBLY - Fuselage, Sta. 105, right	1	24-1 to 24-3557 inclusive
	23675-04		BULKHEAD ASSEMBLY - Fuselage, Sta. 105, right	1	24-3558 and up, 26-2 and up

A - Used on PA-24-180 with serial numbers 24-1 to 24-2298 inclusive and PA-24-250 with serial numbers 24-105 to 24-2174, 24-2176 to 24-2298 inclusive.
B - Used on PA-24-180 with serial numbers 24-2299 to 24-3284 inclusive and PA-24-250 with serial numbers 24-2175, 24-2299 to 24-2843 inclusive.
C - Used on PA-24-180 with serial numbers 24-3285 and up, PA-24-250 with serial numbers 24-2844 and up and PA-24-260 airplanes.
D - Used on PA-24-180 with serial numbers 24-3285 and up, PA-24-250 with serial numbers 24-2844 and up, and PA-24-260 with serial numbers 24-3642, 24-4000 to 24-4782, 24-4784 to 24-4803 inclusive.
E - Used on PA-24-180 and PA-24-250 with serial numbers 24-3558 and up, PA-24-260 with serial numbers 24-3642, 24-4000 to 24-4782, 24-4784 to 24-4803 inclusive, and PA-24-400 with serial numbers 26-2 and up.
V - Used on PA-24-260 airplanes only.
X - Used on PA-24-180 airplanes only.
Y - Used on PA-24-250 airplanes only.
Z - Used on PA-24-400 airplanes only.

Figure and Index Number	Part Number	Code	NOMENCLATURE	No. Req.	SERIAL NUMBERS AFFECTED
5D-5	20557-00	A	BEAM ASSEMBLY - Fuselage longitudinal, Sta. 49 to Sta. 105, left	1	
	20557-18	XY	BEAM ASSEMBLY - Fuselage longitudinal, Sta. 49 to Sta. 105, left	1	24-2175, 24-2299 to 24-3538
	23750-00	B	BEAM ASSEMBLY - Fuselage longitudinal, Sta. 49 to Sta. 105, left	1	
	24398-00	Z	BEAM ASSEMBLY - Fuselage longitudinal, Sta. 49 to Sta. 105, left	1	
	26354-00	V	BEAM ASSEMBLY - Fuselage longitudinal, Sta. 49 to Sta. 105, left	1	24-4783, 24-4804 and up
	20557-01	A	BEAM ASSEMBLY - Fuselage longitudinal, Sta. 49 to Sta. 105, right	1	
	20557-17	XY	BEAM ASSEMBLY - Fuselage longitudinal, Sta. 49 to Sta. 105, right	1	24-2175, 24-2299 to 24-3538
	23750-01	B	BEAM ASSEMBLY - Fuselage longitudinal, Sta. 49 to Sta. 105, right	1	
	24398-01	Z	BEAM ASSEMBLY - Fuselage longitudinal, Sta. 49 to Sta. 105, right	1	
	26354-01	V	BEAM ASSEMBLY - Fuselage longitudinal, Sta. 49 to Sta. 105, right	1	24-4783, 24-4804 and up
-6	25876-00		FITTING ASSEMBLY - Front seat belt attachment, left	1	
	25876-01		FITTING ASSEMBLY - Front seat belt attachment, right	1	
-7	20557-06		ANGLE - Beam, upper, left	1	
	20557-07		ANGLE - Beam, upper, right	1	
-8	20557-08		ANGLE - Beam, bottom, left	1	
	20557-09		ANGLE - Beam, bottom, right	1	
-9	20568-04	XY	BULKHEAD ASSEMBLY - Fuselage Sta. 96, bottom, left	1	24-1 to 24-3557 inclusive
	23660-06		BULKHEAD ASSEMBLY - Fuselage Sta. 96, bottom, left	1	24-3558 and up, 26-2 and up
	20568-05	XY	BULKHEAD ASSEMBLY - Fuselage Sta. 96, bottom, right	1	24-1 to 24-3557 inclusive
	23660-07		BULKHEAD ASSEMBLY - Fuselage Sta. 96, bottom, right	1	24-3558 and up, 26-2 and up
-10	20570-04	XY	BULKHEAD ASSEMBLY - Fuselage Sta. 77, bottom, left	1	24-1 to 24-3557 inclusive
	20570-08		BULKHEAD ASSEMBLY - Fuselage Sta. 77, bottom, left	1	24-3558 and up, 26-2 and up
	20570-05	XY	BULKHEAD ASSEMBLY - Fuselage Sta. 77, bottom, right	1	24-1 to 24-3557 inclusive
	20570-07		BULKHEAD ASSEMBLY - Fuselage Sta. 77, bottom, right	1	24-3558 and up, 26-2 and up

A - Used on PA-24-180 with serial numbers 24-1 to 24-2298 inclusive, and PA-24-250 with serial numbers 24-105 to 24-2174, 24-2176 to 24-2298 inclusive.
B - Used on PA-24-180 and PA-24-250 with serial numbers 24-3539 and up, and PA-24-260 with serial numbers 24-3642, 24-4000 to 24-4782, 24-4784 to 24-4803 inclusive.
V - Used on PA-24-260 airplanes only.
X - Used on PA-24-180 airplanes only.
Y - Used on PA-24-250 airplanes only.
Z - Used on PA-24-400 airplanes only.

Figure and Index Number	Part Number	Code	NOMENCLATURE	No. Req.	SERIAL NUMBERS AFFECTED
5D-11	20600-44	AB	STRINGER - Fuselage side, Sta. 87 to Sta. 105, left	1	
	23690-04	C	STRINGER - Fuselage side, Sta. 87 to Sta. 105, left	1	
	23690-04	VZ	STRINGER - Fuselage side, Sta. 87 to Sta. 105, left	1	
	20600-45	AB	STRINGER - Fuselage side, Sta. 87 to Sta. 105, right	1	
	23690-05	C	STRINGER - Fuselage side, Sta. 87 to Sta. 105, right	1	
	23690-05	VZ	STRINGER - Fuselage side, Sta. 87 to Sta. 105, right	1	
-12	20601-08	XY	BULKHEAD ASSEMBLY - Fuselage Sta. 87, left	1	24-1 to 24-3557 inclusive
	23656-02		BULKHEAD ASSEMBLY - Fuselage Sta. 87, left	1	24-3558 and up, 26-2 and up
	20601-07	XY	BULKHEAD ASSEMBLY - Fuselage Sta. 87, right	1	24-1 to 24-3557 inclusive
	23656-03		BULKHEAD ASSEMBLY - Fuselage Sta. 87, right	1	24-3558 and up, 26-2 and up
-13	20600-46	XY	STRINGER - Fuselage side, Sta. 65 to Sta. 87, left	1	24-1 to 24-3557 inclusive
	23743-04		STRINGER - Fuselage side, Sta. 65 to Sta. 87, left	1	24-3558 and up, 26-2 and up
	20600-47	XY	STRINGER - Fuselage side, Sta. 65 to Sta. 87, right	1	24-1 to 24-3557 inclusive
	23743-05		STRINGER - Fuselage side, Sta. 65 to Sta. 87, right	1	24-3558 and up, 26-2 and up
14	20612-06	XY	BULKHEAD ASSEMBLY - Fuselage Sta. 66, lower, left	1	24-1 to 24-3557 inclusive
	20612-10		BULKHEAD ASSEMBLY - Fuselage Sta. 66, lower, left	1	24-3558 and up, 26-2 and up
	20612-07	XY	BULKHEAD ASSEMBLY - Fuselage Sta. 66, lower, right	1	24-1 to 24-3557 inclusive
	20612-09	D	BULKHEAD ASSEMBLY - Fuselage Sta. 66, lower, right	1	
	20612-12	V	BULKHEAD ASSEMBLY - Fuselage Sta. 66, lower, right	1	24-4783, 24-4804 and up
-15	20952-00		SPACER - Landing gear retraction motor reinforcement bracket	1	
-16	20953-00		SPACER - Landing gear retraction motor reinforcement bracket	2	

A - Used on PA-24-180 with serial numbers 24-1 to 24-2298 inclusive, and PA-24-250 with serial numbers 24-105 to 24-2174, 24-2176 to 24-2298 inclusive.
B - Used on PA-24-180 with serial numbers 24-2299 to 24-3284 inclusive, and PA-24-250 with serial numbers 24-2175, 24-2299 to 24-2843 inclusive.
C - Used on PA-24-180 with serial numbers 24-3285 and up, and PA-24-250 with serial numbers 24-2844 and up.
D - Used on PA-24-180 and PA-24-250 with serial numbers 24-3558 and up, PA-24-260 with serial numbers 24-3642, 24-4000 to 24-4782, 24-4784 to 24-4803 inclusive and PA-24-400 with serial numbers 26-2 and up.
V - Used on PA-24-260 airplanes only.
X - Used on PA-24-180 airplanes only.
Y - Used on PA-24-250 airplanes only.
Z - Used on PA-24-400 airplanes only.

Figure and Index Number	Part Number	Code	NOMENCLATURE	No. Req.	SERIAL NUMBERS AFFECTED
5D-17	20971-00	XY	BULKHEAD ASSEMBLY - Fuselage Sta. 68	1	
	20971-09	C	BULKHEAD ASSEMBLY - Fuselage Sta. 68	1	
	26473-00	V	BULKHEAD ASSEMBLY - Fuselage Sta. 68	1	24-4783, 24-4804 and up
-18	20892-00	A	BRACKET ASSEMBLY - Fuel strainer mounting	1	
	22367-00	B	STRINGER ASSEMBLY - Fuel strainer mounting	1	
	24488-00	Z	STRINGER ASSEMBLY - Fuel strainer mounting	1	
	22367-02	V	STRINGER ASSEMBLY - Fuel strainer mounting	1	
-19	21953-00		BRACKET ASSEMBLY - Seat track support, left	1	
	21953-01		BRACKET ASSEMBLY - Seat track support, right	1	
-20	20987-00	A	BULKHEAD ASSEMBLY - Fuselage Sta. 92, bottom	1	
	23142-00	BV	BULKHEAD ASSEMBLY - Fuselage Sta. 92, bottom	1	
	24412-00	Z	BULKHEAD ASSEMBLY - Fuselage Sta. 92, bottom	1	
-21	20987-03	A	ANGLE - Fuselage Sta. 92, bottom	1	
	22217-03	BV	ANGLE - Fuselage Sta. 92, bottom	1	
	22217-03	Z	ANGLE - Fuselage Sta. 92, bottom	1	
-22	20954-00		CHANNEL ASSEMBLY - Landing gear retraction motor support	1	
-23	21760-00		LUG - Gear retraction motor attachment	1	
-24	20601-06	A	BULKHEAD ASSEMBLY - Fuselage Sta. 87, bottom	1	
	20601-10	X	BULKHEAD ASSEMBLY - Fuselage Sta. 87, bottom	1	24-2299 and up
	20601-10	Y	BULKHEAD ASSEMBLY - Fuselage Sta. 87, bottom	1	24-2175, 24-2299 to 24-2843
	22630-04	Y	BULKHEAD ASSEMBLY - Fuselage Sta. 87, bottom	1	24-2844 to 24-3284 inclusive
	22630-09	Y	BULKHEAD ASSEMBLY - Fuselage Sta. 87, bottom	1	24-3285 to 24-3538 inclusive
	23656-05	D	BULKHEAD ASSEMBLY - Fuselage Sta. 87, bottom	1	
	26480-00	V	BULKHEAD ASSEMBLY - Fuselage Sta. 87, bottom	1	24-4783, 24-4804 and up
	24414-03	Z	BULKHEAD ASSEMBLY - Fuselage Sta. 87, bottom	1	
-25	20600-54	XY	STRINGER - Fuselage bottom, Sta. 87 to Sta. 105	2	
	22629-02	VZ	STRINGER - Fuselage bottom, Sta. 87 to Sta. 105	2	
-26	20600-62		STRINGER - Fuselage bottom, Sta. 96 to Sta. 105, left	1	
	20600-63		STRINGER - Fuselage bottom, Sta. 96 to Sta. 105, right	1	

A - Used on PA-24-180 with serial numbers 24-1 to 24-2298 inclusive, and PA-24-250 with serial numbers 24-105 to 24-2174, 24-2176 to 24-2298 inclusive.
B - Used on PA-24-180 with serial numbers 24-2299 and up, and PA-24-250 with serial numbers 24-2175, 24-2299 and up.
C - Used on PA-24-260 with serial numbers 24-3642, 24-4000 to 24-4782 inclusive, 24-4784 to 24-4803 inclusive, and PA-24-400 with serial numbers 26-2 and up.
D - Used on PA-24-250 with serial numbers 24-3539 and up, and PA-24-260 with serial numbers 24-3642, 24-4000 to 24-4782, 24-4784 to 24-4803 inclusive.
V - Used on PA-24-260 airplanes only.
X - Used on PA-24-180 airplanes only.
Y - Used on PA-24-250 airplanes only.
Z - Used on PA-24-400 airplanes only.

Figure and Index Number	Part Number	Code	NOMENCLATURE	No. Req.	SERIAL NUMBERS AFFECTED
5D-27	20600-20	XY	CHANNEL - Fuselage Sta. 49 to Sta. 136, left	1	24-1 to 24-2298 inclusive
	22232-03		CHANNEL - Fuselage Sta. 49 to Sta. 136, left	1	24-2299 to 24-4246, 24-4248 to 24-4299 inclusive, 26-2 and up
	20600-21		CHANNEL - Fuselage Sta. 49 to Sta. 136, right	1	24-1 to 24-4246, 24-4248 to 24-4299 inclusive, 26-2 and up
	25383-12	V	CHANNEL - Fuselage Sta. 49 to Sta. 130, left	1	24-4247, 24-4300 and up
	25383-13	V	CHANNEL - Fuselage Sta. 49 to Sta. 130, right	1	24-4247, 24-4300 and up
-28	20600-50		STRINGER - Fuselage bottom, Sta. 49 to Sta. 66, left	1	
	20600-51		STRINGER - Fuselage bottom, Sta. 49 to Sta. 66, right	1	
-29	20600-52	A	CHANNEL - Fuselage bottom, Sta. 66 to Sta. 87, left	1	
	20600-53	A	CHANNEL - Fuselage bottom, Sta. 66 to Sta. 89, right	1	
	22607-16		CHANNEL - Fuselage bottom, Sta. 66 to Sta. 89, left and right	2	24-4783, 24-4804 and up, 26-2 and up
-30	20493-00		FITTING ASSEMBLY - Engine mount upper attachment, left	1	
	20493-01		FITTING ASSEMBLY - Engine mount upper attachment, right	1	
-31	20503-00		FITTING ASSEMBLY - Engine mount lower attachment, left	1	
	20503-01		FITTING ASSEMBLY - Engine mount lower attachment, right	1	
-32	20567-07		COVER ASSEMBLY - Nose wheel	1	
-33	20567-06		COVER - Nose wheel, left	1	
	20567-05		COVER - Nose wheel, right	1	
-34	20600-99		ANGLE ASSEMBLY - Sta. 70 to Sta. 105, lower, right	1	
-35	24437-00	VZ	TUBE ASSEMBLY - Cabin air outlet	2	24-3642, 24-4000 to 24-4246, 24-4248 to 24-4299 inclusive, 26-2 and up
-36	20443-00		BRACKET ASSEMBLY - Rudder pedal torque tube bearing, left	1	
	20443-01		BRACKET ASSEMBLY - Rudder pedal torque tube bearing, right	1	
-37	20600-80	XYZ	CHANNEL - Fuselage side, Sta. 66 to Sta. 70, left	1	
	26860-00	V	CHANNEL ASSEMBLY - Fuselage side, Sta. 66 to Sta. 70, left	1	
	20600-81	XYZ	CHANNEL ASSEMBLY - Fuselage side, Sta. 66 to Sta. 70, right	1	
	26860-01	V	CHANNEL ASSEMBLY - Fuselage side, Sta. 66 to Sta. 70, right	1	
-38	20601-05		GUSSET - Fuselage Sta. 87	2	
-39	21328-02	XYZ	BRACKET - Radio cable clamp, front	2	
-40	20567-02		PLATE - Nose wheel cover, bottom	1	
-41	20567-04		ANGLE - Nose wheel cover, right	1	
	20567-09		ANGLE - Nose wheel cover, left	1	
-42	20613-03		GUSSET PLATE - Fuselage Sta. 66, right	1	
	20613-04		GUSSET PLATE - Fuselage Sta. 66, left	1	

A - Used on PA-24-180 and PA-24-250 with serial numbers 24-1 and up, PA-24-260 with serial numbers 24-3642, 24-4000 to 24-4782 inclusive, 24-4784 to 24-4803 inclusive.
V - Used on PA-24-260 airplanes only.
X - Used on PA-24-180 airplanes only.
Y - Used on PA-24-250 airplanes only.
Z - Used on PA-24-400 airplanes only.

Figure and Index Number	Part Number	Code	NOMENCLATURE	No. Req.	SERIAL NUMBERS AFFECTED
5D-43	20614-08	AB	BULKHEAD ASSEMBLY - Fuselage Sta. 70, lower rear, left	1	
	22870-02	C	BULKHEAD ASSEMBLY - Fuselage Sta. 70, lower rear, left	1	
	22572-12	Z	BULKHEAD ASSEMBLY - Fuselage Sta. 70, lower rear, left	1	
	20614-09	AB	BULKHEAD ASSEMBLY - Fuselage Sta. 70, lower rear, right	1	
	22870-03	C	BULKHEAD ASSEMBLY - Fuselage Sta. 70, lower rear, right	1	
	22572-13	Z	BULKHEAD ASSEMBLY - Fuselage Sta. 70, lower rear, right	1	
-44	20614-10	AB	BULKHEAD ASSEMBLY - Fuselage Sta. 70, lower front, left	1	
	22870-04	C	BULKHEAD ASSEMBLY - Fuselage Sta. 70, lower front, left	1	
	22572-10	Z	BULKHEAD ASSEMBLY - Fuselage Sta. 70, lower front, left	1	
	20614-11	AB	BULKHEAD ASSEMBLY - Fuselage Sta. 70, lower front, right	1	
	22870-05	C	BULKHEAD ASSEMBLY - Fuselage Sta. 70, lower front, right	1	
	22572-11	Z	BULKHEAD ASSEMBLY - Fuselage Sta. 70, lower front, right	1	
-45	23073-00	VYZ	BRACKET ASSEMBLY - Fuel pump support	1	
-46	21244-00		PLATE ASSEMBLY - Retraction rod seal guide	1	
-47	21245-00		SEAL ASSEMBLY - Nose gear retraction rod	1	24-1 to 24-2843 inclusive
	21245-05		SEAL ASSEMBLY - Nose gear retraction rod	1	24-2844 and up, 26-2 and up
-48	20612-04		CHANNEL - Fuselage upper Sta. 66, left	1	
	20612-05		CHANNEL - Fuselage upper Sta. 66, right	1	
-49	20604-12		CHANNEL ASSEMBLY - Fuselage upper Sta. 70, left	1	
	20604-10		CHANNEL ASSEMBLY - Fuselage upper Sta. 70, right	1	
-50	20627-06		BRACKET ASSEMBLY - Door hinge, lower	1	
	20627-07		BRACKET ASSEMBLY - Door hinge, upper	1	
-51	22238-02	D	BRACKET - Flap control pulley, Sta. 87, inboard	1	
	22238-03	D	BRACKET - Flap control pulley, Sta. 87, outboard	1	

A - Used on PA-24-180 with serial numbers 24-1 to 24-2298 inclusive, and PA-24-250 with serial numbers 24-105 to 24-2174, 24-2176 to 24-2298.
B - Used on PA-24-180 with serial numbers 24-2299 to 24-3284 inclusive, and PA-24-250 with serial numbers 24-2175, 24-2299 to 24-2843 inclusive.
C - Used on PA-24-180 with serial numbers 24-3285 and up, PA-24-250 with serial numbers 24-2844 and up, and PA-24-260 airplanes.
D - Used on PA-24-180 with serial numbers 24-3285 and up, and PA-24-250 with serial numbers 24-2175, 24-2299 to 24-2843 inclusive.
V - Used on PA-24-260 airplanes only.
Y - Used on PA-24-250 airplanes only.
Z - Used on PA-24-400 airplanes only.

Figure and Index Number	Part Number	Code	NOMENCLATURE	No. Req.	SERIAL NUMBERS AFFECTED
5D-52	21416-00	A	SUPPORT - Parking brake valve	1	
-53	20539-12	XY	GUSSET - Fuselage Sta. 105, side, left, lower	1	24-1 to 24-3676 inclusive
	20539-13	XY	GUSSET - Fuselage Sta. 105, side, right, lower	1	24-1 to 24-3676 inclusive
	20539-14	XY	GUSSET - Fuselage Sta. 105, side, left, upper	1	24-1 to 24-3676 inclusive
	20539-15	XY	GUSSET - Fuselage Sta. 105, side, right, upper	1	24-1 to 24-3676 inclusive
-54	23643-00		GUSSET - Fuselage Sta. 105, side, left	1	24-3677 and up, 26-2 and up
	23643-01		GUSSET - Fuselage Sta. 105, side, right	1	24-3677 and up, 26-2 and up
-55	25675-00	V	BRACKET - Pitch servo mounting	1	24-4567 to 24-4782 inclusive, 24-4784 to 24-4803 inclusive
	26622-00	V	BRACKET - Pitch servo mounting	1	24-4783, 24-4804 and up
-56	26578-00	V	BRACKET - Gasper attachment	2	24-4783, 24-4804 and up
-57	23972-00	V	BRACKET ASSEMBLY - Landing gear retraction lever	2	24-4783, 24-4804 and up
-58	26514-00	V	BRACKET ASSEMBLY	1	24-4783, 24-4804 and up

A - Used on PA-24-180 with serial numbers 24-1 to 24-2298 inclusive, and PA-24-250 with serial numbers 24-105 to 24-2174, 24-2176 to 24-2298.
V - Used on PA-24-260 airplanes only.
X - Used on PA-24-180 airplanes only.
Y - Used on PA-24-250 airplanes only.

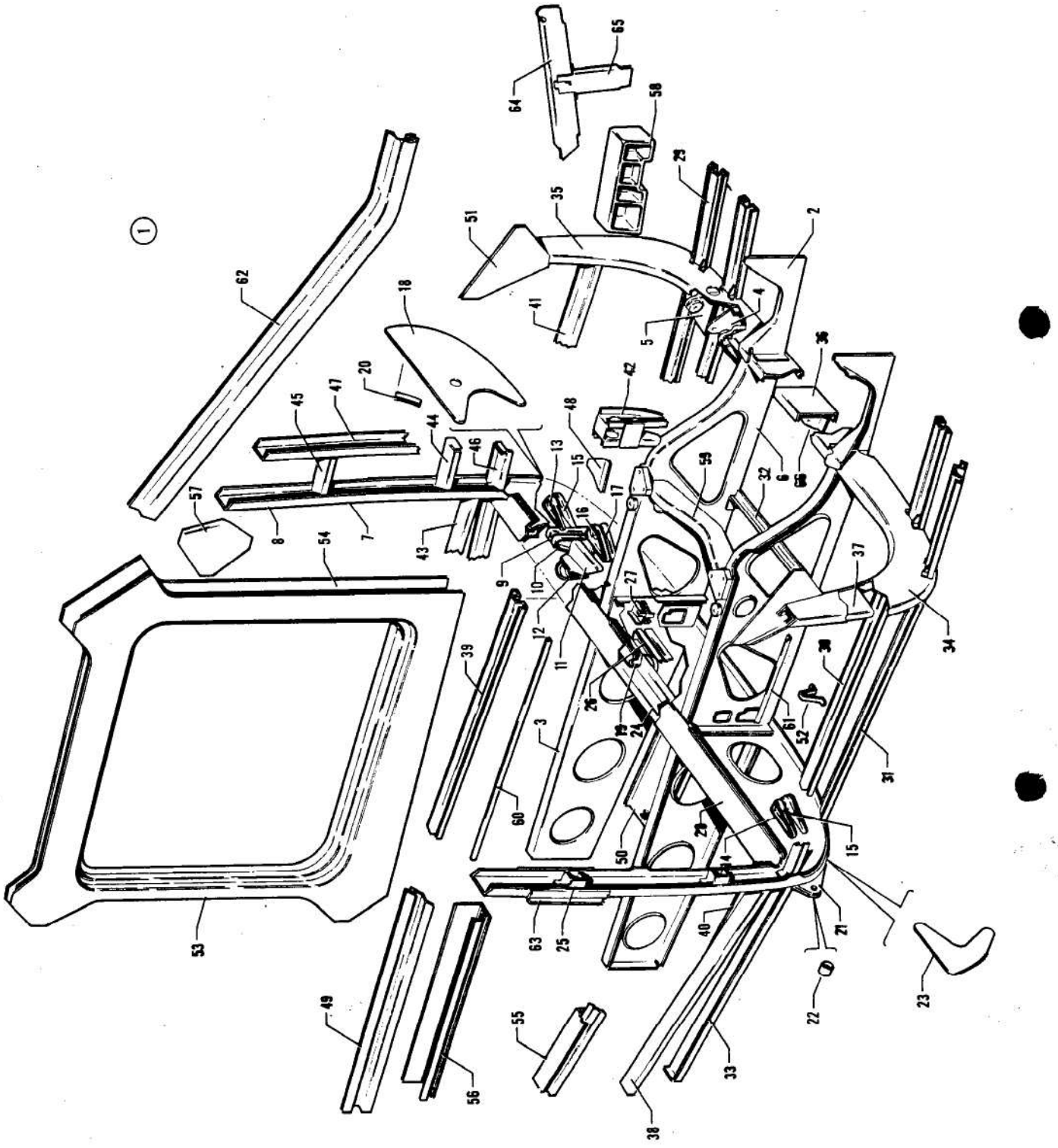

Figure 5E. Fuselage Rear Frame Assembly

Figure and Index Number	Part Number	Code	NOMENCLATURE	No. Req.	SERIAL NUMBERS AFFECTED
5E-	20600	BD	DRAWING - Frame Assembly, Fuselage, Rear		
	23055	C	DRAWING - Frame Assembly, Fuselage, Rear		
	22620	Z	DRAWING - Frame Assembly, Fuselage, Rear		
	24831	V	DRAWING - Frame Assembly, Fuselage, Rear		
-1	20600-92	BD	FRAME ASSEMBLY - Fuselage, rear	1	
	23055-00	C	FRAME ASSEMBLY - Fuselage, rear	1	
	22620-20	Z	FRAME ASSEMBLY - Fuselage, rear	1	26-2 to 26-124 inclusive
	22620-22	Z	FRAME ASSEMBLY - Fuselage, rear	1	26-125 and up
	24831-00	V	FRAME ASSEMBLY - Fuselage, rear	1	
-2	20455-00		BULKHEAD - Fuselage bottom, Sta. 105 to Sta. 113, left	1	
	20455-01		BULKHEAD - Fuselage bottom, Sta. 105 to Sta. 113, right	1	
-3	20464-00	VXY	BULKHEAD ASSEMBLY - Fuselage bottom, Sta. 136 to Sta. 157, left	1	
	22562-00	Z	BULKHEAD ASSEMBLY - Fuselage bottom, Sta. 136 to Sta. 157, left	1	
	20464-01	VXY	BULKHEAD ASSEMBLY - Fuselage bottom, Sta. 136 to Sta. 157, right	1	
	22562-01	Z	BULKHEAD ASSEMBLY - Fuselage bottom, Sta. 136 to Sta. 157, right	1	
-4	20477-00		BRACKET - Pulley, Sta. 113, center, left	1	
-5	20515-00		BRACKET - Pulley, Sta. 113, outboard, left	1	
	20516-00		BRACKET - Pulley, Sta. 113, inboard, left	1	

A - Used on PA-24-180 and PA-24-250 with serial numbers 24-1 and up, PA-24-260 with serial numbers 24-3642, 24-4000 to 24-4246 inclusive, 24-4248 to 24-4299 inclusive, and PA-24-400 with serial numbers 26-2 and up.

B - Used on PA-24-180 with serial numbers 24-2299 to 24-3284 inclusive, and PA-24-250 with serial numbers 24-2175, 24-2299 to 24-2843 inclusive.

C - Used on PA-24-180 with serial numbers 24-3285 and up, and PA-24-250 with serial numbers 24-2844 and up.

D - Used on PA-24-180 with serial numbers 24-1 to 24-2298 inclusive, and PA-24-250 with serial numbers 24-105 to 24-2174 inclusive, 24-2176 to 24-2298 inclusive.

V - Used on PA-24-260 airplanes only.

X - Used on PA-24-180 airplanes only.

Y - Used on PA-24-250 airplanes only.

Z - Used on PA-24-400 airplanes only.

Figure and Index Number	Part Number	Code	NOMENCLATURE	No. Req.	SERIAL NUMBERS AFFECTED
5E-6	20546-00	BD	BULKHEAD ASSEMBLY - Fuselage bottom, Sta. 113 to Sta. 136, left	1	
	20546-04	C	BULKHEAD ASSEMBLY - Fuselage bottom, Sta. 113 to Sta. 136, left	1	
	20546-08	Z	BULKHEAD ASSEMBLY - Fuselage bottom, Sta. 113 to Sta. 136, left	1	
	20546-12	V	BULKHEAD ASSEMBLY - Fuselage bottom, Sta. 113 to Sta. 136, left	1	
	20546-01	BD	BULKHEAD ASSEMBLY - Fuselage bottom, Sta. 113 to Sta. 136, right	1	
	20546-05	C	BULKHEAD ASSEMBLY - Fuselage bottom, Sta. 113 to Sta. 136, right	1	
	20546-09	Z	BULKHEAD ASSEMBLY - Fuselage bottom, Sta. 113 to Sta. 136, right	1	
	20546-13	V	BULKHEAD ASSEMBLY - Fuselage bottom, Sta. 113 to Sta. 136, right	1	
-7	20554-22	XY	BULKHEAD ASSEMBLY - Fuselage Sta. 136, lower half	1	24-1 to 24-2843 inclusive
	20554-31	VXY	BULKHEAD ASSEMBLY - Fuselage Sta. 136, lower half	1	24-2844 and up
	24655-03	Z	BULKHEAD ASSEMBLY - Fuselage Sta. 136, lower half	1	
-8	20554-02	VXY	CHANNEL - Fuselage Sta. 136, left	1	
	24655-02	Z	CHANNEL - Fuselage Sta. 136, left	1	
	20554-03	VXY	CHANNEL - Fuselage Sta. 136, right	1	
	22606-03	Z	CHANNEL - Fuselage Sta. 136, right	1	
-9	20442-02		BRACKET - Pulley, fuselage Sta. 136, left	1	
-10	20442-03		BRACKET - Pulley, fuselage Sta. 136, left	1	
-11	20497-00		BRACKET - Pulley, fuselage Sta. 136, left	1	
-12	20498-00		BRACKET - Pulley, fuselage Sta. 136, left	1	
-13	20504-02		BRACKET - Pulley, fuselage Sta. 136, left	1	
-14	20504-03		BRACKET - Pulley, fuselage Sta. 136, right	1	
-15	20504-04		BRACKET - Pulley, fuselage Sta. 136, right	2	
-16	20505-02		BRACKET - Pulley, fuselage Sta. 136, left	1	
-17	20505-03		BRACKET - Pulley, fuselage Sta. 136, left	1	

A - Used on PA-24-180 and PA-24-250 with serial numbers 24-1 and up, PA-24-260 with serial numbers 24-3642, 24-4000 to 24-4246 inclusive, 24-4248 to 24-4299 inclusive, and PA-24-400 with serial numbers 26-2 and up.
B - Used on PA-24-180 with serial numbers 24-2299 to 24-3284 inclusive, and PA-24-250 with serial numbers 24-2175, 24-2299 to 24-2843 inclusive.
C - Used on PA-24-180 with serial numbers 24-3285 and up, and PA-24-250 with serial numbers 24-2844 and up.
D - Used on PA-24-180 with serial numbers 24-1 to 24-2299 inclusive, and PA-24-250 with serial numbers 24-105 to 24-2174, 24-2176 to 24-2298 inclusive.
V - Used on PA-24-260 airplanes only.
X - Used on PA-24-180 airplanes only.
Y - Used on PA-24-250 airplanes only.
Z - Used on PA-24-400 airplanes only.

Figure and Index Number	Part Number	Code	NOMENCLATURE	No. Req.	SERIAL NUMBERS AFFECTED
5E-18	23665-02		DOUBLER - Fuselage Sta. 136, left	1	
	23664-02		DOUBLER - Fuselage Sta. 136, right	1	
-19	20554-12		CHANNEL - Splice	1	
-20	20554-16		ANGLE - Left	1	
	20554-17		ANGLE - Right	1	
-21	23663-00		FITTING ASSEMBLY	2	
-22	80022-97		BUSHING - Rear spar attachment	1	
-23	23662-00		PLATE	2	
-24	20554-05		CHANNEL - Reinforcement	1	
-25	20670-00	VXY	BRACKET - Baggage door hinge, lower	1	
	20670-01	VXY	BRACKET - Baggage door hinge, upper	1	
-26	24650-02	Z	BRACKET - Pulley, fuselage Sta. 136, left	1	
	24650-03	Z	BRACKET - Pulley, fuselage Sta. 136, left	1	
-27	24651-02	Z	BRACKET - Pulley, fuselage Sta. 136, left	1	
	24651-03	Z	BRACKET - Pulley, fuselage Sta. 136, left	1	
-28	20554-23		STRIP ASSEMBLY - Bulkhead, Sta. 136	1	
-29	20600-56		STRINGER - Fuselage bottom, Sta. 105 to Sta. 113	4	
-30	20600-58		STRINGER - Fuselage bottom, Sta. 113 to Sta. 136, left	1	
	20600-59		STRINGER - Fuselage bottom, Sta. 113 to Sta. 136, right	1	
-31	20600-66	VXY	STRINGER - Fuselage bottom, Sta. 113 to Sta. 136, left	1	
	22620-10	Z	STRINGER - Fuselage bottom, Sta. 113 to Sta. 136, left	1	
	20600-67	VXY	STRINGER - Fuselage bottom, Sta. 113 to Sta. 136, right	1	
	22620-11	Z	STRINGER - Fuselage bottom, Sta. 113 to Sta. 136, right	1	
-32	20600-70		STRINGER - Fuselage bottom, Sta. 122	1	
-33	20600-84		STRINGER - Fuselage side, Sta. 136 to Sta. 157, left	1	
	20600-83		STRINGER - Fuselage side, Sta. 136 to Sta. 157, right	1	

A - Used on PA-24-180 and PA-24-250 with serial numbers 24-1 and up, PA-24-260 with serial numbers 24-3642, 24-4000 to 24-4246 inclusive, 24-4248 to 24-4299 inclusive, and PA-24-400 with serial numbers 26-2 and up.
V - Used on PA-24-260 airplanes only.
X - Used on PA-24-180 airplanes only.
Y - Used on PA-24-250 airplanes only.
Z - Used on PA-24-400 airplanes only.

Figure and Index Number	Part Number	Code	NOMENCLATURE	No. Req.	SERIAL NUMBERS AFFECTED
5E-34	20616-11	BC	BULKHEAD ASSEMBLY - Fuselage Sta. 113	1	
	22618-04	XY	BULKHEAD ASSEMBLY - Fuselage Sta. 113	1	
	22618-06	VXY	BULKHEAD ASSEMBLY - Fuselage Sta. 113	1	
	22618-04	Z	BULKHEAD ASSEMBLY - Fuselage Sta. 113	1	
-35	20616-02		CHANNEL - Fuselage Sta. 113, left	1	
	20616-03		CHANNEL - Fuselage Sta. 113, right	1	
-36	20616-08		PLATE - Splice	1	
-37	20616-04		DOUBLER - Left	1	
	20616-05		DOUBLER - Right	1	
-38	20600-75		CHANNEL - Fuselage bottom, Sta. 136 to Sta. 157, right	1	
-39	22620-08		STRINGER - Fuselage bottom, Sta. 136 to Sta. 157, left	1	
-40	22620-09		STRINGER - Fuselage bottom, Sta. 136 to Sta. 157, right	1	
-41	20600-42	XY	STRINGER - Fuselage side, Sta. 113 to Sta. 136, left	1	
	22620-04	Z	STRINGER - Fuselage side, Sta. 113 to Sta. 136, left	1	26-2 to 26-124 inclusive
	22620-23	Z	STRINGER - Fuselage side, Sta. 113 to Sta. 136, left	1	26-125 and up
	24831-02	V	STRINGER - Fuselage side, Sta. 113 to Sta. 136, left	1	
	20600-43	XY	STRINGER - Fuselage side, Sta. 113 to Sta. 136, right	1	
	22620-05	Z	STRINGER - Fuselage side, Sta. 113 to Sta. 136, right	1	
	22620-24	Z	STRINGER - Fuselage side, Sta. 113 to Sta. 136, right	1	26-125 and up
	24831-03	V	STRINGER - Fuselage side, Sta. 113 to Sta. 136, right	1	
-42	20496-00		BRACKET ASSEMBLY - Rear seat support	2	
-43	22620-06	Z	CHANNEL - Sta. 136 to Sta. 157, left	1	
-44	22604-01	Z	CHANNEL - Fuselage Sta. 132 to Sta. 136, left	1	
	22604-00	Z	CHANNEL - Fuselage Sta. 132 to Sta. 136, right	1	
-45	22604-01	Z	CHANNEL - Fuselage Sta. 132 to Sta. 136, left	2	
-46	22620-14	Z	STRINGER ASSEMBLY - Fuselage Sta. 132 to Sta. 136, left	1	
	22620-15	Z	STRINGER ASSEMBLY - Fuselage Sta. 132 to Sta. 136, right	1	
-47	22600-02	Z	BULKHEAD - Fuselage Sta. 132, left	1	
	22600-03	Z	BULKHEAD - Fuselage Sta. 132, right	1	
-48	22587-00	Z	GUSSET - Fuselage Sta. 132	2	

A - Used on PA-24-180 and PA-24-250 with serial numbers 24-1 and up, PA-24-260 with serial numbers 24-3642, 24-4000 to 24-4246 inclusive, 24-4248 to 24-4299 inclusive, and PA-24-400 with serial numbers 26-2 and up.
B - Used on PA-24-180 with serial numbers 24-2299 to 24-3284 inclusive, and PA-24-250 with serial numbers 24-2175, 24-2299 to 24-2843 inclusive.
C - Used on PA-24-180 with serial numbers 24-1 to 24-2298 inclusive, and PA-24-250 with serial numbers 24-105 to 24-2174, 24-2176 to 24-2298 inclusive.
V - Used on PA-24-260 airplanes only.
X - Used on PA-24-180 airplanes only.
Y - Used on PA-24-250 airplanes only.
Z - Used on PA-24-400 airplanes only.

Figure and Index Number	Part Number	Code	NOMENCLATURE	No. Req.	SERIAL NUMBERS AFFECTED
5E-49	20600-22		CHANNEL - Fuselage Sta. 136 to Sta. 157, left	1	
	20600-23		CHANNEL - Fuselage Sta. 136 to Sta. 157, right	1	
-50	30304-00	B	BRACKET ASSEMBLY - Antenna mounting, bottom	1	
	30304-00	Z	BRACKET ASSEMBLY - Antenna mounting, bottom	1	
-51	20616-06		GUSSET - Bulkhead, Sta. 113, left	1	
	20616-07		GUSSET - Bulkhead, Sta. 113, right	1	
-52	21328-03		BRACKET - Radio cable clamp, rear	1	
-53	22578-02	Z	FRAME - Baggage door, outer, right side	1	
-54	22578-03	Z	FRAME - Baggage door, inner, right side	1	
-55	20600-98	VXY	ANGLE ASSEMBLY - Fuselage Sta. 136 to Sta. 157, side, right	1	
-56	20600-97	VXY	ANGLE ASSEMBLY - Fuselage Sta. 136 to Sta. 157, side, right	1	
-57	20554-14		GUSSET - Fuselage side, Sta. 136, left	1	
	20554-15	VXY	GUSSET - Fuselage side, Sta. 136, right	1	
-58	20411-00		FITTING - Main spar top attachment, left	1	
	20411-01		FITTING - Main spar top attachment, right	1	
-59	20445-00		BULKHEAD - Seat support, Sta. 123	1	
-60	20600-68		STRINGER - Fuselage Sta. 136 to Sta. 157, bottom, left	1	
	20600-130		STRINGER - Fuselage Sta. 136 to Sta. 157, bottom, right	1	
-61	20600-124	VXY	STRINGER - Fuselage Sta. 115 to Sta. 136, left	1	
	22607-10	Z	STRINGER - Fuselage Sta. 115 to Sta. 136, left	1	
	20600-153	VXY	STRINGER - Fuselage Sta. 115 to Sta. 136, right	1	24-3294 and up
	22607-24	Z	STRINGER - Fuselage Sta. 115 to Sta. 136, right	1	
-62	20600-20	XY	CHANNEL - Fuselage Sta. 49 to Sta. 136, left	1	24-1 to 24-2298 inclusive
	22232-03		CHANNEL - Fuselage Sta. 49 to Sta. 136, left	1	24-2299 and up, 26-2 and up
	20600-21		CHANNEL - Fuselage Sta. 49 to Sta. 136, right	1	
-63	20554-27	VXY	ANGLE ASSEMBLY - Fuselage Sta. 136, side, right	1	
-64	21797-00		CHANNEL ASSEMBLY - Armrest support, left	1	24-337 and up, 26-2 and up
	21797-01		CHANNEL ASSEMBLY - Armrest support, right	1	24-337 and up, 26-2 and up
-65	21798-00		CHANNEL - Armrest support, left	1	24-337 and up, 26-2 and up
	21798-01		CHANNEL - Armrest support, right	1	24-337 and up, 26-2 and up
-66	20470-00	X	BRACKET - Flap pulley, inboard	1	24-3285 and up
	20472-00	X	BRACKET - Flap pulley, outboard	1	24-3285 and up

A - Used on PA-24-180 and PA-24-250 with serial numbers 24-1 and up, PA-24-260 with serial numbers 24-3642, 24-4000 to 24-4246 inclusive, 24-4248 to 24-4299 inclusive, and PA-24-400 with serial numbers 26-2 and up.

B - Used on PA-24-180 with serial numbers 24-3285 and up, PA-24-250 with serial numbers 24-2844 and up, and PA-24-260 airplanes.

V - Used on PA-24-260 airplanes only.

X - Used on PA-24-180 airplanes only.

Y - Used on PA-24-250 airplanes only.

Z - Used on PA-24-400 airplanes only.

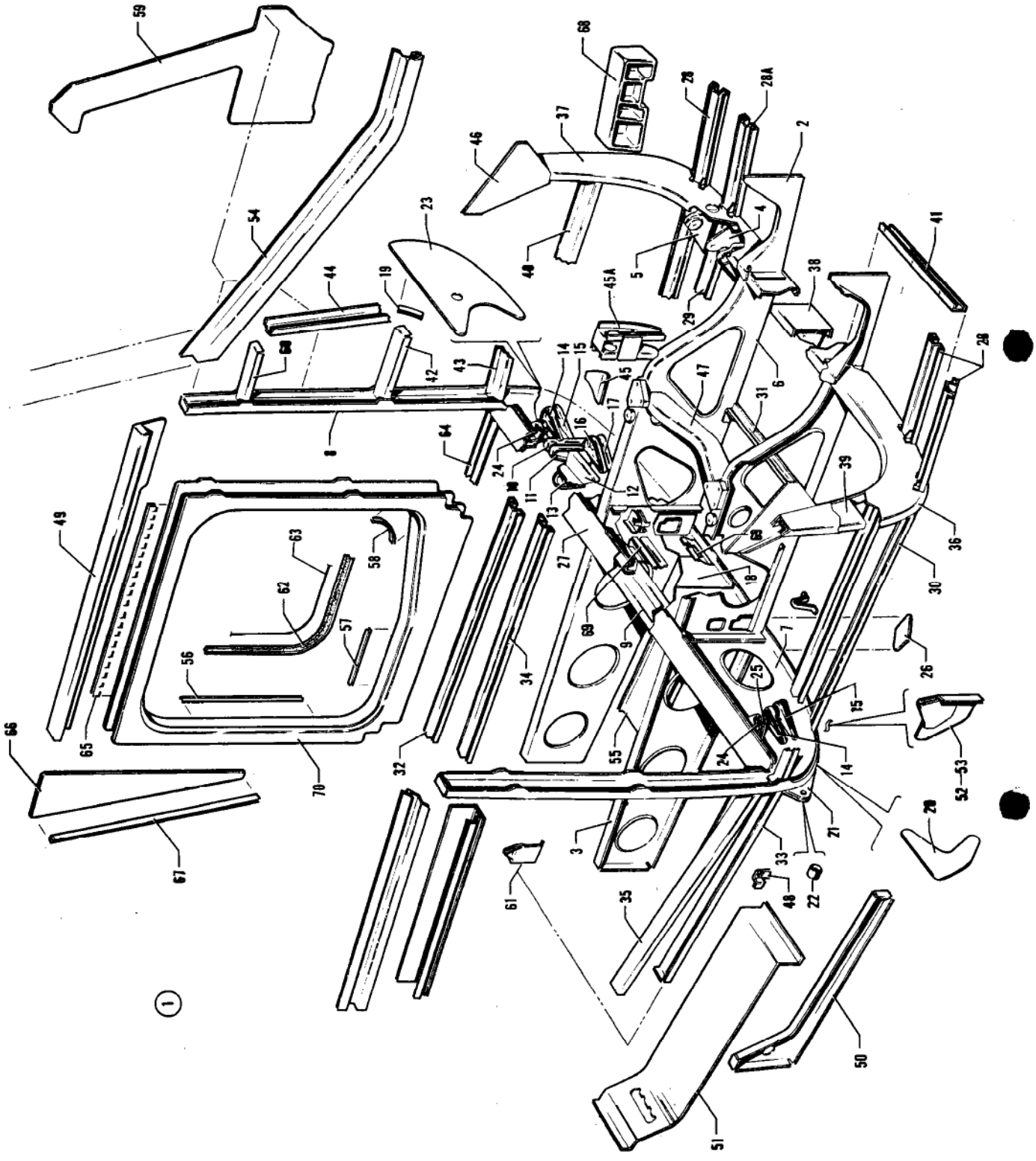

Figure 5F. Fuselage Rear Frame Assembly

Figure and Index Number	Part Number	Code	NOMENCLATURE	No. Req.	SERIAL NUMBERS AFFECTED
5F-	25333		DRAWING - Frame Assembly, Fuselage, Rear		
-1	25333-14		FRAME ASSEMBLY - Fuselage, rear	1	24-4247, 24-4300 to 24-4566
	25333-00	B	FRAME ASSEMBLY - Fuselage, rear	1	
	25333-17		FRAME ASSEMBLY - Fuselage, rear	1	24-4783, 24-4804 and up
-2	20455-00		BULKHEAD - Fuselage bottom, Sta. 105 to Sta. 113, left	1	
	20455-01		BULKHEAD - Fuselage bottom, Sta. 105 to Sta. 113, right	1	
-3	22562-00		BULKHEAD ASSEMBLY - Fuselage bottom, Sta. 136 to Sta. 157, left	1	
	22562-01		BULKHEAD ASSEMBLY - Fuselage bottom, Sta. 136 to Sta. 157, right	1	
-4	20477-00		BRACKET - Pulley, Sta. 113, center, left	1	
-5	20515-00		BRACKET - Pulley, Sta. 113, outboard, left	1	
	20516-00		BRACKET - Pulley, Sta. 113, inboard, left	1	
-6	25286-00	A	BULKHEAD ASSEMBLY - Fuselage bottom, Sta. 113 to Sta. 136, left	1	
	26614-00		BULKHEAD ASSEMBLY - Fuselage bottom, Sta. 113 to Sta. 136, left	1	24-4783, 24-4804 and up
	25286-01		BULKHEAD ASSEMBLY - Fuselage bottom, Sta. 113 to Sta. 136, right	1	
-7	25320-04		BULKHEAD ASSEMBLY - Fuselage, Sta. 136, lower	1	24-4247, 24-4300 to 24-4566
	25320-08	B	BULKHEAD ASSEMBLY - Fuselage, Sta. 136, lower	1	
	25320-09		BULKHEAD ASSEMBLY - Fuselage, Sta. 136, lower	1	24-4783, 24-4804 and up
-8	25320-02		CHANNEL - Fuselage, Sta. 136, left	1	24-4247, 24-4300 to 24-4566
	25320-10		CHANNEL - Fuselage, Sta. 136, left	1	24-4567 and up
	25320-03		CHANNEL - Fuselage, Sta. 136, right	1	
-9	25320-06		CHANNEL - Reinforcement	1	
-10	20442-02		BRACKET - Pulley, Sta. 136, rear, left	1	
-11	20442-03		BRACKET - Pulley, Sta. 136, rear, left	1	
-12	20497-00		BRACKET - Pulley, Sta. 136, rear, left	1	
-13	20498-00		BRACKET - Pulley, Sta. 136, rear, left	1	
-14	20504-02		BRACKET - Pulley, Sta. 136, front, left	1	
	20504-03		BRACKET - Pulley, Sta. 136, front, right	1	
-15	20504-04		BRACKET - Pulley, Sta. 136, front	2	
-16	20505-02		BRACKET - Pulley, Sta. 136, front, left	1	
-17	20505-03		BRACKET - Pulley, Sta. 136, front, left	1	
-18	20554-12		CHANNEL - Splice	1	
-19	20554-16		ANGLE - Left	1	
	20554-17		ANGLE - Right	1	
-20	23662-00		PLATE	2	
-21	23663-00		FITTING ASSEMBLY	2	
-22	80022-97		BUSHING - Rear spar attachment	1	
-23	23665-02		DOUBLER - Fuselage, Sta. 136, left	1	
	23664-02		DOUBLER - Fuselage, Sta. 136, right	1	
-24	25318-02		BRACKET - Sta. 136, front, left	1	
	25318-03		BRACKET - Sta. 136, front, right	1	
-25	25318-04		BRACKET - Sta. 136, front, left	1	
	25318-05		BRACKET - Sta. 136, front, right	1	

A - Used on PA-24-260 with serial numbers 24-4247, 24-4300 to 24-4782, 24-4784 to 24-4803 inclusive.
B - Used on PA-24-260 with serial numbers 24-4567 to 24-4782, 24-4784 to 24-4803 inclusive.

Figure and Index Number	Part Number	Code	NOMENCLATURE	No. Req.	SERIAL NUMBERS AFFECTED
5F-26	25319-00	A	GUSSET - Reinforcement	2	
-27	25320-05		STRIP - Bulkhead, Sta. 136	1	
-28	20600-56		STRINGER - Fuselage bottom, Sta. 105 to Sta. 113	3	
-28a	26103-00		STRINGER - Fuselage bottom, Sta. 105 to Sta. 113	1	
-29	20600-58		STRINGER - Fuselage bottom, Sta. 113 to Sta. 136, left	1	
	20600-59		STRINGER - Fuselage bottom, Sta. 113 to Sta. 136, right	1	
-30	25333-04		STRINGER - Fuselage bottom, Sta. 113 to Sta. 136, left	1	
	25333-05		STRINGER - Fuselage bottom, Sta. 113 to Sta. 136, right	1	
-31	20600-70		STRINGER - Fuselage bottom, Sta. 122	1	
-32	25333-02		CHANNEL - Fuselage, Sta. 136 to Sta. 157, bottom, left	1	
	25333-03		CHANNEL - Fuselage, Sta. 136 to Sta. 157, bottom, right	1	
-33	25333-12		CHANNEL - Sta. 136 to Sta. 157, right	1	
-34	22620-08		STRINGER - Fuselage bottom, Sta. 136 to Sta. 157, left	1	
	22620-09		STRINGER - Fuselage bottom, Sta. 136 to Sta. 157, right	1	
-35	20600-75		CHANNEL - Fuselage bottom, Sta. 136 to Sta. 157, right	1	
-36	22618-06		BULKHEAD ASSEMBLY - Fuselage, Sta. 113	1	24-4247, 24-4300 to 24-4566
	22618-04	B	BULKHEAD ASSEMBLY - Fuselage, Sta. 113	1	
	22618-08		BULKHEAD ASSEMBLY - Fuselage, Sta. 113	1	24-4783, 24-4804 and up
-37	20616-02		CHANNEL - Fuselage, Sta. 113, left	1	24-4247, 24-4300 to 24-4566
	22618-02		CHANNEL - Fuselage, Sta. 113, left	1	24-4567 and up
	20616-03		CHANNEL - Fuselage, Sta. 113, right	1	24-4247, 24-4300 to 24-4566
	22618-03		CHANNEL - Fuselage, Sta. 113, right	1	24-4567 and up
-38	20616-08		PLATE - Splice	1	24-4247, 24-4300 to 24-4566
	22618-05		PLATE - Splice	1	24-4567 and up
-39	20616-04		DOUBLER - Left	1	
	20616-05		DOUBLER - Right	1	
-40	25316-00		STRINGER - Fuselage side, Sta. 113 to Sta. 136, left	1	
	25316-01		STRINGER - Fuselage side, Sta. 113 to Sta. 136, right	1	
-41	25313-00		CHANNEL ASSEMBLY - Fuselage stiffener, left	1	
	25313-01		CHANNEL ASSEMBLY - Fuselage stiffener, right	1	
-42	25292-02		CHANNEL - Fuselage, left	1	
	25292-03		CHANNEL - Fuselage, right	1	
-43	25274-00		STRINGER ASSEMBLY - Fuselage, left	1	
	25274-01		STRINGER ASSEMBLY - Fuselage, right	1	
-44	25306-02		BULKHEAD - Sta. 130, left	1	
	25306-03		BULKHEAD - Sta. 130, right	1	
-45	22587-00		GUSSET - Fuselage bulkhead	2	
-45a	25315-00		BRACKET ASSEMBLY - Seat support, center, left	1	
	25315-04		BRACKET ASSEMBLY - Seat support, center, right	1	

A - Used on PA-24-260 with serial numbers 24-4247, 24-4300 to 24-4782, 24-4784 to 24-4803 inclusive.
B - Used on PA-24-260 with serial numbers 24-4567 to 24-4782, 24-4784 to 24-4803 inclusive.

Figure and Index Number	Part Number	Code	NOMENCLATURE	No. Req.	SERIAL NUMBERS AFFECTED
5F-26	25319-00	A	GUSSET - Reinforcement	2	
-27	25320-05		STRIP - Bulkhead, Sta. 136	1	
-28	20600-56		STRINGER - Fuselage bottom, Sta. 105 to Sta. 113	3	
-28a	26103-00		STRINGER - Fuselage bottom, Sta. 105 to Sta. 113	1	
-29	20600-58		STRINGER - Fuselage bottom, Sta. 113 to Sta. 136, left	1	
	20600-59		STRINGER - Fuselage bottom, Sta. 113 to Sta. 136, right	1	
-30	25333-04		STRINGER - Fuselage bottom, Sta. 113 to Sta. 136, left	1	
	25333-05		STRINGER - Fuselage bottom, Sta. 113 to Sta. 136, right	1	
-31	20600-70		STRINGER - Fuselage bottom, Sta. 122	1	
-32	25333-02		CHANNEL - Fuselage, Sta. 136 to Sta. 157, bottom, left	1	
	25333-03		CHANNEL - Fuselage, Sta. 136 to Sta. 157, bottom, right	1	
-33	25333-12		CHANNEL - Sta. 136 to Sta. 157, right	1	
-34	22620-08		STRINGER - Fuselage bottom, Sta. 136 to Sta. 157, left	1	
	22620-09		STRINGER - Fuselage bottom, Sta. 136 to Sta. 157, right	1	
-35	20600-75		CHANNEL - Fuselage bottom, Sta. 136 to Sta. 157, right	1	
-36	22618-06		BULKHEAD ASSEMBLY - Fuselage, Sta. 113	1	24-4247, 24-4300 to 24-4566
	22618-04	B	BULKHEAD ASSEMBLY - Fuselage, Sta. 113	1	
	22618-08		BULKHEAD ASSEMBLY - Fuselage, Sta. 113	1	24-4783, 24-4804 and up
-37	20616-02		CHANNEL - Fuselage, Sta. 113, left	1	24-4247, 24-4300 to 24-4566
	22618-02		CHANNEL - Fuselage, Sta. 113, left	1	24-4567 and up
	20616-03		CHANNEL - Fuselage, Sta. 113, right	1	24-4247, 24-4300 to 24-4566
	22618-03		CHANNEL - Fuselage, Sta. 113, right	1	24-4567 and up
-38	20616-08		PLATE - Splice	1	24-4247, 24-4300 to 24-4566
	22618-05		PLATE - Splice	1	24-4567 and up
-39	20616-04		DOUBLER - Left	1	
	20616-05		DOUBLER - Right	1	
-40	25316-00		STRINGER - Fuselage side, Sta. 113 to Sta. 136, left	1	
	25316-01		STRINGER - Fuselage side, Sta. 113 to Sta. 136, right	1	
-41	25313-00		CHANNEL ASSEMBLY - Fuselage stiffener, left	1	
	25313-01		CHANNEL ASSEMBLY - Fuselage stiffener, right	1	
-42	25292-02		CHANNEL - Fuselage, left	1	
	25292-03		CHANNEL - Fuselage, right	1	
-43	25274-00		STRINGER ASSEMBLY - Fuselage, left	1	
	25274-01		STRINGER ASSEMBLY - Fuselage, right	1	
-44	25306-02		BULKHEAD - Sta. 130, left	1	
	25306-03		BULKHEAD - Sta. 130, right	1	
-45	22587-00		GUSSET - Fuselage bulkhead	2	
-45a	25315-00		BRACKET ASSEMBLY - Seat support, center, left	1	
	25315-04		BRACKET ASSEMBLY - Seat support, center, right	1	

A - Used on PA-24-260 with serial numbers 24-4247, 24-4300 to 24-4782, 24-4784 to 24-4803 inclusive.
B - Used on PA-24-260 with serial numbers 24-4567 to 24-4782, 24-4784 to 24-4803 inclusive.

Figure and Index Number	Part Number	Code	NOMENCLATURE	No. Req.	SERIAL NUMBERS AFFECTED
5F-46	20616-06		GUSSET - Bulkhead, Sta. 113, left	1	
	20616-07		GUSSET - Bulkhead, Sta. 113, right	1	
-47	20445-00	A	BULKHEAD - Seat support, Sta. 123	1	
-48	21250-00		CLIP - Flap fairing attachment, left	1	
	21250-01		CLIP - Flap fairing attachment, right	1	
-49	25299-00		CHANNEL - Fuselage, left	1	
	25299-01		CHANNEL - Fuselage, right	1	
-50	25328-00		CHANNEL - Cabin exhaust duct, right	1	
	25328-01		CHANNEL - Cabin exhaust duct, left	1	
-51	25357-00		COVER ASSEMBLY - Cabin air exhaust	1	
-52	25354-00		BRACKET ASSEMBLY - Center seat outboard belt, left	1	
-53	25354-01		BRACKET ASSEMBLY - Center seat outboard belt, right	1	
-54	25383-12		CHANNEL - Fuselage, Sta. 49 to Sta. 130, left	1	
	25383-13		CHANNEL - Fuselage, Sta. 49 to Sta. 130, right	1	
-55	25578-00	A	BRACKET ASSEMBLY - Antenna mounting, bottom	1	
-56	25243-03		STRIP - Baggage door moulding seal, top and front	2	
	25243-04		STRIP - Baggage door moulding seal, rear	1	
-57	25243-02		STRIP - Baggage door moulding seal	2	
-58	25244-00		STRIP - Baggage door moulding seal	4	
-59	25306-08		GUSSET - Bulkhead, Sta. 130, left	1	
	25306-09		GUSSET - Bulkhead, Sta. 130, right	1	
-60	25292-04		CHANNEL - Sta. 129 to Sta. 136, left	1	
	25292-05		CHANNEL - Sta. 129 to Sta. 136, right	1	
-61	25353-00		BRACKET ASSEMBLY - Outboard belt, rear seat, left	1	
	25353-01		BRACKET ASSEMBLY - Outboard belt, rear seat, right	1	
-62	23183-00		MOULDING - Baggage door	8'	
-63	187 652		RUBBER CORD - Baggage door	8'	
-64	25300-06		CHANNEL ASSEMBLY - Baggage door	1	
-65	30405-01		HINGE - Baggage door	1	
-66	25374-02		PLATE - Baggage door	1	
-67	25375-00		ANGLE - Baggage door	1	
-68	20411-00		FITTING - Main spar top attachment, left	1	
	20411-01		FITTING - Main spar top attachment, right	1	
-69	25657-00	B	BRACKET - Roll servo mounting	2	
	26645-00		BRACKET - Roll servo mounting, lower	1	24-4783, 24-4804 and up
	26646-00		BRACKET - Roll servo mounting, upper	1	24-4783, 24-4804 and up
-70	25300-04		FRAME ASSEMBLY - Baggage door	1	

A - Used on PA-24-260 with serial numbers 24-4247, 24-4300 to 24-4782, 24-4784 to 24-4803.
B - Used on PA-24-260 with serial numbers 24-4567 to 24-4782, 24-4784 to 24-4803 inclusive.

When ordering, always specify Part Number, Description and Serial Number of Aircraft

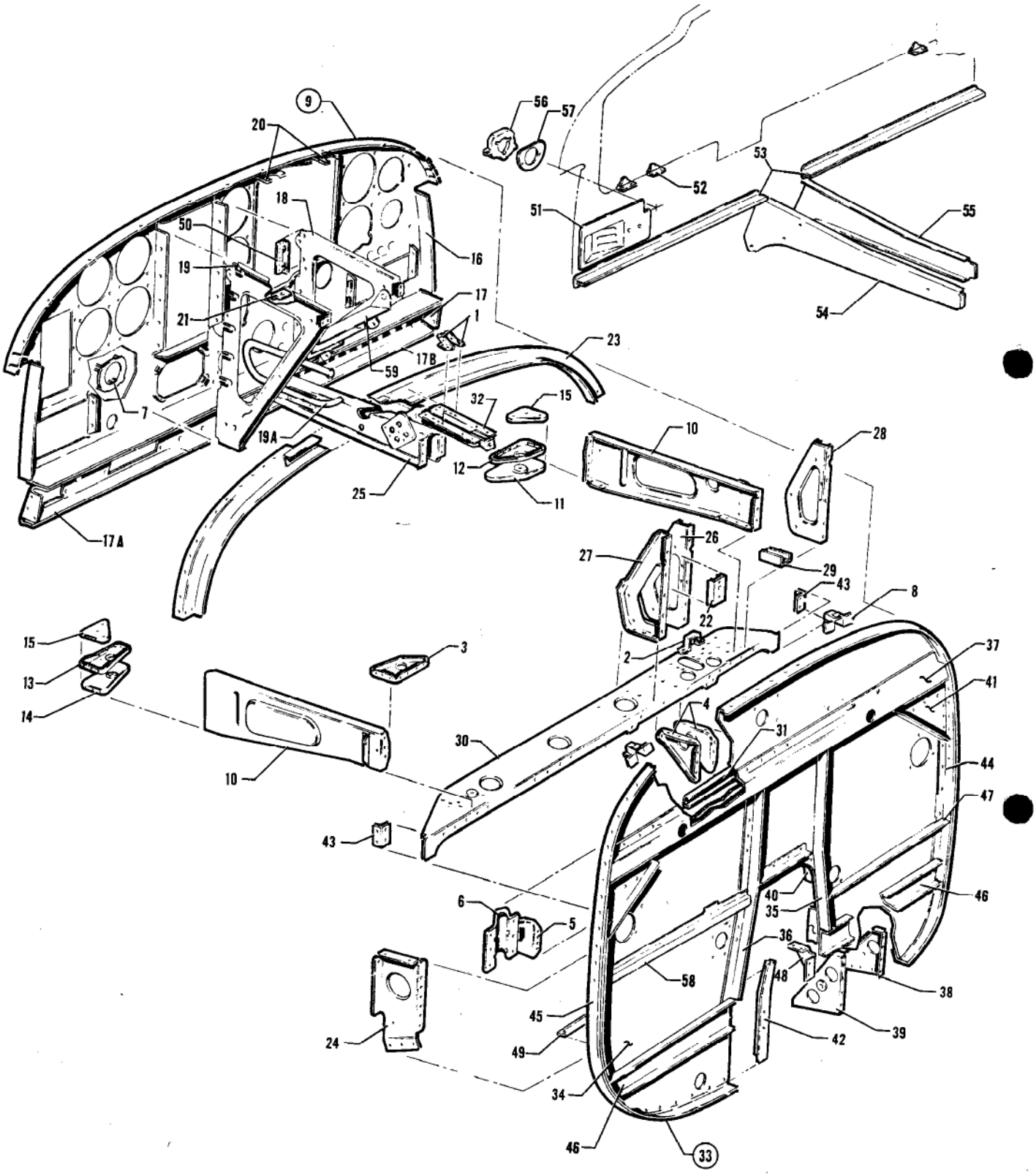

Figure 5G. Fuselage Firewall Assembly

Figure and Index Number	Part Number	Code	NOMENCLATURE	No. Req.	SERIAL NUMBERS AFFECTED
5G-	20600	A	DRAWING - Firewall and Instrument Panel Assembly		
	22228	B	DRAWING - Firewall and Instrument Panel Assembly		
	23068	C	DRAWING - Firewall and Instrument Panel Assembly		
	22579	Z	DRAWING - Firewall and Instrument Panel Assembly		
	23068	V	DRAWING - Firewall and Instrument Panel Assembly		24-3642, 24-4000 to 24-4768 incl.
	26340	V	DRAWING - Firewall and Instrument Panel Assembly		24-4769 to 24-4782 inclusive, 24-4784 to 24-4803 inclusive
	26468	V	DRAWING - Firewall and Instrument Panel Assembly		24-4783, 24-4804 and up
-1	20610-06		ANGLE - LH	1	
	20610-07		ANGLE - RH	1	
-2	20924-00		GUARD - Pulley	1	
-3	20929-00		BRACKET - Stabilator pulley	1	
-4	20930-00		BRACKET - Stabilator pulley, LH	1	
	20930-01		BRACKET - Stabilator pulley, RH	1	
-5	20935-00		BRACKET ASSEMBLY - Stabilator pulley	1	
-6	20936-00		BRACKET - Stabilator pulley	1	
-7	21471-00		BRACKET ASSEMBLY - Control shaft roller	2	24-1 to 24-4768 inclusive, 26-2 and up
-8	21445-00		BRACKET ASSEMBLY - Top cowl rear mounting	2	
-9	20572-00	A	PANEL ASSEMBLY - Instrument (complete)	1	
	22060-00	B	PANEL ASSEMBLY - Instrument (complete)	1	
	22635-00	C	PANEL ASSEMBLY - Instrument (complete)	1	
	22635-02	Z	PANEL ASSEMBLY - Instrument (complete)	1	
	22635-02	V	PANEL ASSEMBLY - Instrument (complete)	1	24-3642, 24-4000 to 24-4246 incl., 24-4248 to 24-4299 inclusive
	22635-03	E	PANEL ASSEMBLY - Instrument (complete)	1	
	26683-00	V	PANEL ASSEMBLY - Instrument (complete)	1	24-4783, 24-4804 to 24-5018 incl.
	26683-02	V	PANEL ASSEMBLY - Instrument (complete)	1	24-5019 and up
-10	20912-00	A	BULKHEAD ASSEMBLY - Fuselage longitudinal, LH	1	
	20912-01	A	BULKHEAD ASSEMBLY - Fuselage longitudinal, RH	1	
	22211-00	DE	BULKHEAD ASSEMBLY - Fuselage longitudinal, LH	1	
	22213-00	DE	BULKHEAD ASSEMBLY - Fuselage longitudinal, RH	1	
	22211-04	V	BULKHEAD ASSEMBLY - Fuselage longitudinal, LH	1	24-4783, 24-4804 to 24-4994 incl.
	22211-06	V	BULKHEAD ASSEMBLY - Fuselage longitudinal, LH	1	24-4995 and up
	22213-04	V	BULKHEAD ASSEMBLY - Fuselage longitudinal, RH	1	24-4783, 24-4804 and up

A - Used on PA-24-180 and PA-24-250 with serial numbers 24-1 to 24-2174, 24-2176 to 24-2298 inclusive.
B - Used on PA-24-180 with serial numbers 24-2299 to 24-3284 inclusive and PA-24-250 with serial numbers 24-2175, 24-2299 to 24-2843 inclusive.
C - Used on PA-24-180 with serial numbers 24-3285 and up, and PA-24-250 with serial numbers 24-2844 and up.
D - Used on PA-24-180 with serial numbers 24-2299 and up, PA-24-250 with serial numbers 24-2175, 24-2299 and up and PA-24-400.
E - Used on PA-24-260 with serial numbers 24-3642, 24-4000 to 24-4782, 24-4784 to 24-4803 inclusive.
V - Used on PA-24-260 airplanes only.
Z - Used on PA-24-400 airplanes only.

Figure and Index Number	Part Number	Code	NOMENCLATURE	No. Req.	SERIAL NUMBERS AFFECTED
5G-18	20710-00	A	BRACKET ASSEMBLY - Radio support, left	1	
	23400-00	C	BRACKET ASSEMBLY - Radio support, left	1	
	26813-00	V	BRACKET ASSEMBLY - Radio support, left	1	24-4783, 24-4804 to 24-4976 incl.
	26813-03	V	BRACKET ASSEMBLY - Radio support, left	1	24-4977 to 24-5018 inclusive
	27276-00	V	BRACKET ASSEMBLY - Radio support, left	1	24-5019 and up
-19	20710-01	A	BRACKET ASSEMBLY - Radio support, right	1	
	22191-00	B	BRACKET ASSEMBLY - Radio support, right (with tube)	1	
	22191-03	E	BRACKET ASSEMBLY - Radio support, right	1	
	26810-00	V	BRACKET ASSEMBLY - Radio support, right	1	24-4783, 24-4804 to 24-5018 incl.
	27275-00	V	BRACKET - Radio support, right	1	24-5019 and up
-19a	22486-00	XY	TUBE ASSEMBLY - Radio cooling	1	24-2299 to 24-2602 inclusive
	22622-00	XY	TUBE ASSEMBLY - Radio cooling	1	24-2603 to 24-3564 inclusive, 24-3566 to 24-3594 inclusive
	23718-00	XY	TUBE ASSEMBLY - Radio cooling	1	24-3565, 24-3595 to 24-3687
	24657-00		TUBE ASSEMBLY - Radio cooling	1	24-3688 and up, 26-2 and up
-20	22064-00	A	BRACKET ASSEMBLY - Gyro panel mounting, top left	1	
	22064-01	A	BRACKET ASSEMBLY - Gyro panel mounting, top right	1	
	19530-00	C	BRACKET ASSEMBLY - Gyro panel mounting, top	2	
-21	22065-00	A	BRACKET ASSEMBLY - Gyro panel mounting, bottom	2	
	22050-00	C	BRACKET ASSEMBLY - Gyro panel mounting, bottom	1	
-22	22200-00	D	SUPPORT - Brake hose	2	
-23	20558-02	A	BULKHEAD ASSEMBLY - Fuselage, Sta. 57	1	
	22203-02	D	BULKHEAD ASSEMBLY - Fuselage, Sta. 57	1	
-24	22204-00	D	BRACKET - Center bearing	1	

A - Used on PA-24-180 and PA-24-250 with serial numbers 24-1 to 24-2174, 24-2176 to 24-2298 inclusive.
B - Used on PA-24-180 and PA-24-250 with serial numbers 24-2175, 24-2299 to 24-3564, 24-3566 to 24-3594 inclusive.
C - Used on PA-24-180 with serial numbers 24-2299 and up, PA-24-250 with serial numbers 24-2175, 24-2299 and up, PA-24-260 with serial numbers 24-3642, 24-4000 to 24-4782, 24-4784 to 24-4803 inclusive, and PA-24-400 airplanes.
D - Used on PA-24-180 with serial numbers 24-2299 and up, PA-24-250 with serial numbers 24-2175, 24-2299 and up, and PA-24-400 and PA-24-260 airplanes.
E - Used on PA-24-180 and PA-24-250 with serial numbers 24-3565, 24-3595 and up, PA-24-260 with serial numbers 24-3642, 24-4000 to 24-4782, 24-4784 to 24-4803 inclusive, and PA-24-400 with serial numbers 26-2 and up.
V - Used on PA-24-260 airplanes only.
X - Used on PA-24-180 airplanes only.
Y - Used on PA-24-250 airplanes only.

Figure and Index Number	Part Number	Code	NOMENCLATURE	No. Req.	SERIAL NUMBERS AFFECTED
5G-25	20989-00	XY	BRACKET ASSEMBLY - Brake lever support	1	24-1 to 24-1952 inclusive
	20989-05	XY	BRACKET ASSEMBLY - Brake lever support	1	24-1953 to 24-2174 inclusive, 24-2176 to 24-2298 inclusive
	22206-00	B	BRACKET ASSEMBLY - Brake lever support	1	
	22724-00	E	BRACKET ASSEMBLY - Brake lever support	1	
	22724-00	Z	BRACKET ASSEMBLY - Brake lever support	1	
-26	22208-02	D	BRACKET - Brake cylinder, center	1	
-27	22208-03	D	BRACKET - Brake cylinder, right	1	
-28	22208-04	D	BRACKET - Brake cylinder, left	1	
-29	22209-00	D	CHANNEL - Brake cylinder bracket stiffener	1	
-30	20937-00	A	CHANNEL - Pulley support	1	
	22564-00	VXYZ	CHANNEL ASSEMBLY - Pulley support	1	24-2175, 24-2299 and up, 26-2 and up
-31	20962-00	A	CHANNEL - Bearing bracket support	1	
32	20610-11	A	CHANNEL ASSEMBLY - Fuselage stiffener	1	
	22223-00	D	CHANNEL ASSEMBLY - Fuselage stiffener	1	
-33	20588-14	X	FIREWALL ASSEMBLY - (Complete) Sta. 49	1	24-1 to 24-102 inclusive
	20588-20	XY	FIREWALL ASSEMBLY - (Complete) Sta. 49	1	24-103 to 24-1329 inclusive
	20588-28	XY	FIREWALL ASSEMBLY - (Complete) Sta. 49	1	24-1330 to 24-2174 inclusive, 24-2176 to 24-2201 inclusive
	22112-00	XY	FIREWALL ASSEMBLY - (Complete) Sta. 49	1	24-2202 to 24-2298 inclusive
	22259-00	B	FIREWALL ASSEMBLY - (Complete) Sta. 49	1	
	23066-00	C	FIREWALL ASSEMBLY - (Complete) Sta. 49	1	
	22617-00	Z	FIREWALL ASSEMBLY - (Complete) Sta. 49	1	
	24823-00	V	FIREWALL ASSEMBLY - (Complete) Sta. 49	1	24-3642, 24-4000 to 24-4246 incl., 24-4248 to 24-4299 inclusive
	25360-00	V	FIREWALL ASSEMBLY - (Complete) Sta. 49	1	24-4247, 24-4300 to 24-4782, 24-4784 to 24-4803 inclusive
	26486-00	V	FIREWALL ASSEMBLY - (Complete) Sta. 49	1	24-4783, 24-4804 and up

A - Used on PA-24-180 and PA-24-250 with serial numbers 24-1 to 24-2174, 24-2176 to 24-2298 inclusive.
B - Used on PA-24-180 with serial numbers 24-2299 to 24-3284 inclusive, and PA-24-250 with serial numbers 24-2175, 24-2299 to 24-2843 inclusive.
C - Used on PA-24-180 with serial numbers 24-3285 and up, and PA-24-250 with serial numbers 24-2844 and up.
D - Used on PA-24-180 with serial numbers 24-2299 and up, PA-24-250 with serial numbers 24-2175, 24-2299 and up, and PA-24-400 and PA-24-260 airplanes.
E - Used on PA-24-180 with serial numbers 24-3285 and up, PA-24-250 with serial numbers 24-2844 and up, and PA-24-260 with serial numbers 24-3642, 24-4000 to 24-4782, 24-4784 to 24-4803 inclusive.
V - Used on PA-24-260 airplanes only.
X - Used on PA-24-180 airplanes only.
Y - Used on PA-24-250 airplanes only.
Z - Used on PA-24-400 airplanes only.

Straubing LBA II-A-
Telefon

Figure and Index Number	Part Number	Code	NOMENCLATURE	No. Req.	SERIAL NUMBERS AFFECTED
5G-34	20588-02	X	PANEL - Firewall	1	24-1 to 24-102 inclusive
	20588-19	XY	PANEL - Firewall	1	24-103 to 24-1329 inclusive
	20588-27	XY	PANEL - Firewall	1	24-1330 to 24-2174 inclusive, 24-2176 to 24-2201 inclusive
	22112-02	XY	PANEL - Firewall	1	24-2202 to 24-2298 inclusive
	22259-02	D	PANEL - Firewall	1	
	23066-02		PANEL - Firewall	1	
	22617-02	Z	PANEL - Firewall	1	
	24823-02	V	PANEL - Firewall	1	24-3642, 24-4000 to 24-4246 incl.
	25360-02	V	PANEL - Firewall	1	24-4247, 24-4300 to 24-4782, 24-4784 to 24-4803 inclusive
	26486-02	V	PANEL - Firewall	1	24-4783, 24-4804 and up
-35	20588-08	X	ANGLE - Firewall, left	1	24-1 to 24-102 inclusive
	20588-23	XY	ANGLE - Firewall, left	1	24-103 to 24-2174 inclusive, 24-2176 to 24-2298 inclusive
	22259-05	C	ANGLE - Firewall, left	1	24-2175, 24-2299 and up
	22617-05	A	ANGLE - Firewall, left	1	
-36	20588-09	X	ANGLE - Firewall, right	1	24-1 to 24-102 inclusive
	20588-24	XY	ANGLE - Firewall, right	1	24-103 to 24-2174 inclusive, 24-2176 to 24-2298 inclusive
	22259-08	C	ANGLE - Firewall, right	1	24-2175, 24-2299 and up
	22617-06	A	ANGLE - Firewall, right	1	
-37	20588-13	X	CHANNEL ASSEMBLY	1	24-1 to 24-102 inclusive
	20588-25	XY	CHANNEL ASSEMBLY	1	24-103 to 24-1329 inclusive
	20588-30	XY	CHANNEL ASSEMBLY	1	24-1330 to 24-2174 inclusive, 24-2176 to 24-2298 inclusive
	22259-07	VXY	CHANNEL ASSEMBLY	1	24-2175, 24-2299 and up
-38	20434-00		BRACKET ASSEMBLY - Pulley	1	
-39	20435-00		BRACKET ASSEMBLY - Pulley	1	
-40	20567-03	B	ANGLE - Nose wheel cover	1	
	22617-07	A	ANGLE - Nose wheel cover	1	

A - Used on PA-24-260 with serial numbers 24-4783, 24-4804 and up, and PA-24-400 with serial numbers 26-2 and up.
B - Used on PA-24-180 and PA-24-250 with serial numbers 24-1 and up, PA-24-260 with serial numbers 24-3642, 24-4000 to 24-4782, 24-4784 to 24-4803 inclusive.
C - Used on PA-24-180 and PA-24-250 with serial numbers 24-2175, 24-2299 and up, and PA-24-260 with serial numbers 24-3642, 24-4000 to 24-4782, 24-4784 to 24-4803 inclusive.
D - Used on PA-24-180 with serial numbers 24-2299 to 24-3284 inclusive, and PA-24-250 with serial numbers 24-2175, 24-2299 to 24-2843 inclusive.
V - Used on PA-24-260 airplanes only.
X - Used on PA-24-180 airplanes only.
Y - Used on PA-24-250 airplanes only.
Z - Used on PA-24-400 airplanes only.

When ordering, always specify Part Number, Description and Serial Number of Aircraft

Figure and Index Number	Part Number	Code	NOMENCLATURE	No. Req.	SERIAL NUMBERS AFFECTED
5G-41	20588-05		GUSSET - Right	1	
	20588-06		GUSSET - Left	1	
-42	20588-10		ANGLE - Left	1	26-2 and up, 24-1 to 24-4394
	20588-11		ANGLE - Right	1	26-2 and up, 24-1 to 24-4394
	25623-00	V	ANGLE ASSEMBLY - Left	1	24-4395 and up
	25623-01	V	ANGLE ASSEMBLY - Right	1	24-4395 and up
-43	20588-15		PLATE	2	
-44	20588-16	VXY	ANGLE - Left	1	
	20588-17	VXY	ANGLE - Right	1	
	22617-04	Z	ANGLE - Left	1	
	22617-03	Z	ANGLE - Right	1	
-45	20588-03		ANGLE - Right	1	24-1 to 24-102 inclusive
	20588-21		ANGLE - Right	1	24-103 and up, 26-2 and up
	20588-04		ANGLE - Left	1	24-1 to 24-102 inclusive
	20588-22		ANGLE - Left	1	24-103 and up, 26-2 and up
-46	22576-00	Z	CHANNEL - Firewall reinforcement, left	1	
	22576-01	Z	CHANNEL - Firewall reinforcement, right	1	
-47	26487-00	V	ANGLE - Oil cooler support	1	24-4783, 24-4804 and up
-48	21089-00	A	BRACKET - Brake pulley support, left	1	
-49	25345-00	B	ANGLE - Battery box support	1	
-50	25670-00	C	ANGLE ASSEMBLY - AutoPilot	1	
-51	26427-00	V	BRACKET - Heater and air control	1	24-4783, 24-4804 and up
-52	26445-00	V	BRACKET - Shock mount	5	24-4783, 24-4804 and up
-53	26494-02	V	STRIP ASSEMBLY - Instrument panel cover retainer, left	1	24-4783, 24-4804 and up
	26494-03	V	STRIP ASSEMBLY - Instrument panel cover retainer, right	1	24-4783, 24-4804 and up
-54	24054-00	V	BULKHEAD - Quadrant support	1	24-4783, 24-4804 and up
-55	23707-00	V	BULKHEAD - Quadrant support	1	24-4783, 24-4804 and up
-56	42536-00	V	COLLAR - Control shaft	2	24-4769 and up
-57	26161-00	V	PLATE ASSEMBLY - Control shaft collar	2	24-4769 and up
-58	27058-00	D	CHANNEL - Fuselage bulkhead stiffener	1	
-59	27283-00	V	BRACKET - Radio support	3	24-5019 and up

A - Used on PA-24-180 and PA-24-250 with serial numbers 24-1 to 24-2174, 24-2176 to 24-2298 inclusive.
B - Used on PA-24-260 with serial numbers 24-4247, 24-4300 to 24-4782 inclusive, 24-4784 to 24-4803 inclusive.
C - Used on PA-24-260 with serial numbers 24-4567 to 24-4782 inclusive, 24-4784 to 24-4803 inclusive.
D - Used on PA-24-260 if Dual Brakes are installed.
V - Used on PA-24-260 airplanes only.
X - Used on PA-24-180 airplanes only.
Y - Used on PA-24-250 airplanes only.
Z - Used on PA-24-400 airplanes only.

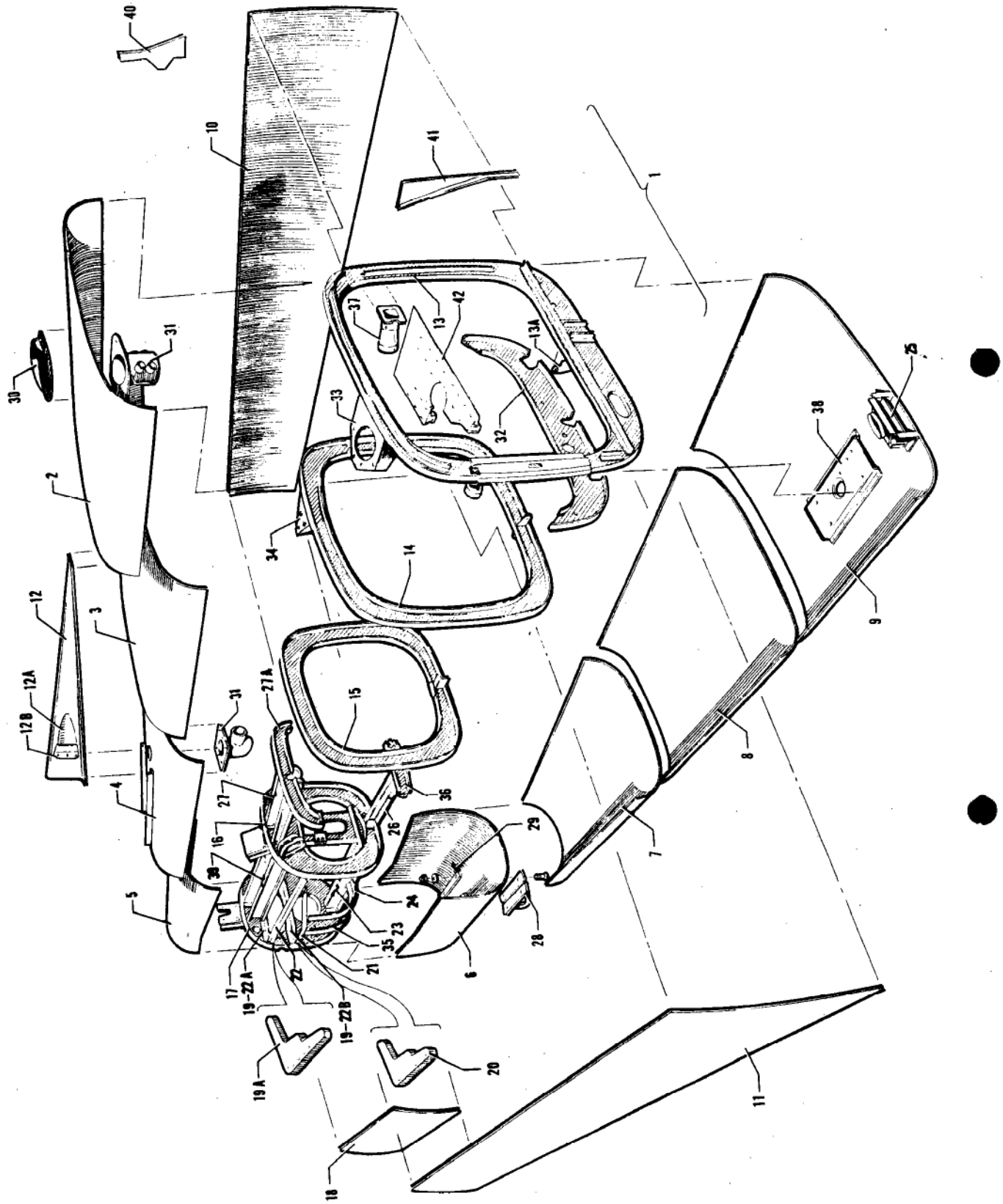

Figure 6. Fuselage Aft Section

Figure and Index Number	Part Number	Code	NOMENCLATURE	No. Req.	SERIAL NUMBERS AFFECTED
6-	20500	A	DRAWING - Fuselage Aft Section		
	22233	B	DRAWING - Fuselage Aft Section		
	22573	Z	DRAWING - Fuselage Aft Section		
	24721	FV	DRAWING - Fuselage Aft Section		
	25385	GV	DRAWING - Fuselage Aft Section		
	26259	V	DRAWING - Fuselage Aft Section		24-4783, 24-4804 and up
-1	20500-00	X	FUSELAGE AFT SECTION	1	24-1 to 24-102 inclusive
	20500-48	XY	FUSELAGE AFT SECTION	1	24-103 to 24-1329 inclusive
	20500-56	C	FUSELAGE AFT SECTION	1	
	22233-00	D	FUSELAGE AFT SECTION	1	
	22233-06	E	FUSELAGE AFT SECTION	1	
	22573-00	Z	FUSELAGE AFT SECTION	1	
	24721-00	F	FUSELAGE AFT SECTION	1	
	25385-00	GV	FUSELAGE AFT SECTION	1	
	26259-00	V	FUSELAGE AFT SECTION	1	24-4783, 24-4804 and up
-2	20500-37	XY	SKIN ASSEMBLY - Front, top	1	24-1 to 24-1329 inclusive
	20500-58	XY	SKIN ASSEMBLY - Front, top	1	24-1330 to 24-2715 inclusive
	22233-09	XY	SKIN ASSEMBLY - Front, top	1	24-2716 and up
	22573-28	VZ	SKIN ASSEMBLY - Front, top	1	
-3	20500-38		SKIN ASSEMBLY - Center, top	1	
-4	20500-39	XY	SKIN ASSEMBLY - Center rear, top	1	
	22573-30	VZ	SKIN ASSEMBLY - Center rear, top	1	
-5	20500-11		SKIN - Rear, top	1	
-6	20500-05	VXY	SKIN - Rear, bottom	1	
	22574-02	Z	SKIN - Rear, bottom	1	
-7	20500-36	VXY	SKIN ASSEMBLY - Center rear, bottom	1	
	22573-07	Z	SKIN ASSEMBLY - Center rear, bottom	1	
-8	20500-35	VXY	SKIN ASSEMBLY - Center, bottom	1	
	22573-06	Z	SKIN ASSEMBLY - Center, bottom	1	

A - Used on PA-24-180 and PA-24-250 with serial numbers 24-1 to 24-2174, 24-2176 to 24-2298 inclusive.
B - Used on PA-24-180 and PA-24-250 with serial numbers 24-2175, 24-2299 and up.
C - Used on PA-24-180 and PA-24-250 with serial numbers 24-1330 to 24-2174, 24-2176 to 24-2298 inclusive.
D - Used on PA-24-180 with serial numbers 24-2299 to 24-3284 inclusive, and PA-24-250 with serial numbers 24-2175, 24-2299 to 24-2843 inclusive.
E - Used on PA-24-180 with serial numbers 24-3285 and up, and PA-24-250 with serial numbers 24-2844 and up.
F - Used on PA-24-260 with serial numbers 24-3642, 24-4000 to 24-4246, 24-4248 to 24-4299 inclusive.
G - Used on PA-24-260 with serial numbers 24-4247, 24-4300 to 24-4782, 24-4784 to 24-4803 inclusive.
V - Used on PA-24-260 airplanes only.
X - Used on PA-24-180 airplanes only.
Y - Used on PA-24-250 airplanes only.
Z - Used on PA-24-400 airplanes only.

Figure and Index Number	Part Number	Code	NOMENCLATURE	No. Req.	SERIAL NUMBERS AFFECTED
6-9	20500-34	XY	SKIN ASSEMBLY - Front, bottom	1	24-1 to 24-102 inclusive
	20500-51	XY	SKIN ASSEMBLY - Front, bottom	1	24-103 to 24-1329 inclusive
	20500-60	C	SKIN ASSEMBLY - Front, bottom	1	
	22233-03	B	SKIN ASSEMBLY - Front, bottom	1	
	22233-03	DV	SKIN ASSEMBLY - Front, bottom	1	
	25385-02	EV	SKIN ASSEMBLY - Front, bottom	1	
	26259-03	V	SKIN ASSEMBLY - Front, bottom	1	24-4783, 24-4804 and up
	22573-03	Z	SKIN ASSEMBLY - Front, bottom	1	
-10	20500-06	XY	SKIN - Side, left	1	24-1 to 24-2298 inclusive
	22233-04		SKIN - Side, left	1	24-2299 and up, 26-2 and up
-11	20500-07	XY	SKIN - Side, right	1	24-1 to 24-2298 inclusive
	22233-05		SKIN - Side, right	1	24-2299 and up, 26-2 and up
-12	20407-00	XY	FIN ASSEMBLY - Dorsal	1	
	24455-00	VZ	FIN ASSEMBLY - Dorsal	1	
-12a	24453-00	VZ	SCOOP - Dorsal fin air, left	1	
	24453-01	VZ	SCOOP - Dorsal fin air, right	1	
-12b	24282-00	VZ	LIP - Dorsal fin air scoop	2	
-13	20450-00	XY	BULKHEAD ASSEMBLY - Fuselage Sta. 157	1	
	20450-13	C	BULKHEAD ASSEMBLY - Fuselage Sta. 157	1	
	22263-00	B	BULKHEAD ASSEMBLY - Fuselage Sta. 157	1	
	22263-06	D	BULKHEAD ASSEMBLY - Fuselage Sta. 157	1	
	22555-06	Z	BULKHEAD ASSEMBLY - Fuselage Sta. 157	1	
	25310-00	E	BULKHEAD ASSEMBLY - Fuselage Sta. 157	1	
	25310-14	V	BULKHEAD ASSEMBLY - Fuselage Sta. 157	1	24-4783, 24-4804 and up
-13a	25308-00	V	BRACKET - Rear seat belt attachment	1	24-4247, 24-4300 and up
-14	20460-00	A	BULKHEAD ASSEMBLY - Fuselage Sta. 184	1	
	22246-00	BV	BULKHEAD ASSEMBLY - Fuselage Sta. 184	1	
	22246-00	Z	BULKHEAD ASSEMBLY - Fuselage Sta. 184	1	
-15	20452-00		BULKHEAD ASSEMBLY - Fuselage Sta. 212	1	
-16	20475-00	XY	BULKHEAD ASSEMBLY - Fuselage Sta. 239	1	
	20475-05	V	BULKHEAD ASSEMBLY - Fuselage Sta. 239	1	
	22904-00	Z	BULKHEAD ASSEMBLY - Fuselage Sta. 239	1	

A - Used on PA-24-180 and PA-24-250 with serial numbers 24-1 to 24-2174, 24-2176 to 24-2298 inclusive.
B - Used on PA-24-180 and PA-24-250 with serial numbers 24-2175, 24-2299 and up.
C - Used on PA-24-180 and PA-24-250 with serial numbers 24-1330 to 24-2174, 24-2176 to 24-2298 inclusive.
D - Used on PA-24-260 with serial numbers 24-3642, 24-4000 to 24-4246, 24-4248 to 24-4299 inclusive.
E - Used on PA-24-260 with serial numbers 24-4247, 24-4300 to 24-4782, 24-4784 to 24-4803 inclusive.
V - Used on PA-24-260 airplanes only.
X - Used on PA-24-180 airplanes only.
Y - Used on PA-24-250 airplanes only.
Z - Used on PA-24-400 airplanes only.

PILOTEN-SERVICE
Straubing LBA II-A-170
Telefon (09421) 216

Figure and Index Number	Part Number	Code	NOMENCLATURE	No. Req.	SERIAL NUMBERS AFFECTED
6-17	20479-00	B	BULKHEAD ASSEMBLY - Fuselage Sta. 258	1	
	20479-12	C	BULKHEAD ASSEMBLY - Fuselage Sta. 258	1	
	20479-15	V	BULKHEAD ASSEMBLY - Fuselage Sta. 258	1	
	22893-00	Z	BULKHEAD ASSEMBLY - Fuselage Sta. 258	1	
-18	20432-00		PLATE ASSEMBLY - Fuselage access cover	1	
-19	22574-07		ANGLE ASSEMBLY - Fuselage aft section, upper	1	
	22574-04		ANGLE ASSEMBLY - Fuselage aft section, lower	1	
-19a	20419-00		FITTING - Stabilizer torque tube bearing, upper, left	1	
	20419-01		FITTING - Stabilizer torque tube bearing, upper, right	1	
-20	20420-00		FITTING - Stabilizer torque tube bearing, lower, left	1	
	20420-01		FITTING - Stabilizer torque tube bearing, lower, right	1	
-21	20500-28		ANGLE - Fuselage aft section, left	1	
	20500-29		ANGLE - Fuselage aft section, right	1	
-22	20500-26		ANGLE - Fuselage aft section, left	1	
	20500-27		ANGLE - Fuselage aft section, right	1	
-22a	20500-31		ANGLE - Extrusion, upper	1	
-22b	22574-08		ANGLE - Extrusion, lower	1	
-23	20500-30	VXY	CHANNEL - Fuselage aft section, bottom	1	
	22574-03	Z	CHANNEL - Fuselage aft section, bottom	1	
-24	20473-00	VXY	ANGLE - Fuselage reinforcement, Sta. 249, left	1	
	20473-01	VXY	ANGLE - Fuselage reinforcement, Sta. 249, right	1	
	22550-00	Z	BULKHEAD - Fuselage Sta. 246, left	1	
	22550-00	Z	BULKHEAD - Fuselage Sta. 246, right	1	
-25	25366-00	AV	BOX ASSEMBLY - Cabin air exhaust	1	
	26131-00	V	BOX ASSEMBLY - Cabin air exhaust	1	24-4783, 24-4804 and up
-26	20778-00		CHANNEL - Fuselage aft section, rear	1	
-27	20780-00		BRACKET - Fuselage aft section, left	1	24-1 to 24-102 inclusive
	21566-00		BRACKET - Fuselage aft section, left	1	24-103 and up
	20780-01		BRACKET - Fuselage aft section, right	1	24-1 to 24-102 inclusive
	21566-01		BRACKET - Fuselage aft section, right	1	24-103 and up
-27a	20500-15	XY	BULKHEAD ASSEMBLY - Fuselage Sta. 223	1	24-1 to 24-102 inclusive
	20500-53		BULKHEAD ASSEMBLY - Fuselage Sta. 223	1	24-103 and up, 26-2 and up
-28	17667-00		SKID ASSEMBLY - Tail	1	
-29	20988-00	XYZ	SPACER - Tail skid	2	
	31921-00	V	SPACER - Tail skid	2	
-30	18405-00	XY	SCOOP - Air inlet	1	24-1330 and up

A - Used on PA-24-260 with serial numbers 24-4247, 24-4300 to 24-4782, 24-4784 to 24-4803 inclusive.
B - Used on PA-24-180 with serial numbers 24-1 to 24-3284 and PA-24-250 with serial numbers 24-1 to 24-2843 inclusive.
C - Used on PA-24-180 with serial numbers 24-3285 and up, and PA-24-250 with serial numbers 24-2844 and up.
V - Used on PA-24-260 airplanes only.
X - Used on PA-24-180 airplanes only.
Y - Used on PA-24-250 airplanes only.
Z - Used on PA-24-400 airplanes only.

Figure and Index Number	Part Number	Code	NOMENCLATURE	No. Req.	SERIAL NUMBERS AFFECTED
6-31	19477-08	XY	BOX ASSEMBLY - Air distribution	1	24-1330 and up
	24676-00	VZ	BOX ASSEMBLY - Air distribution	1	
-32	22235-00	C	BULKHEAD - Fuselage Sta. 165	1	
	22235-00	AV	BULKHEAD - Fuselage Sta. 165	1	
	22235-02	V	BULKHEAD - Fuselage Sta. 165	1	24-4783, 24-4804 and up
-33	20400-00	XYZ	BRACKET - Rotating beacon	1	24-2176 and up, 26-2 and up
	20400-00	BV	BRACKET - Rotating beacon	1	
	25391-00	V	BRACKET - Rotating beacon	1	24-4247, 24-4300 and up
-34	17952-00	XYZ	PLATE - Whip antenna mounting	1	24-3496 to 24-4006 inclusive, 26-2 to 26-124 inclusive
	31537-00	VZ	PLATE - Whip antenna mounting	1	24-4007 and up, 26-125 and up
-35	22549-00	Z	BULKHEAD - Fuselage Sta. 252, left	1	
	22549-01	Z	BULKHEAD - Fuselage Sta. 252, right	1	
-36	20500-16		BULKHEAD - Fuselage Sta. 226, bottom	1	
-37	24436-00	Z	BOX ASSEMBLY - Cabin air inlet, left	1	
	24436-00	BV	BOX ASSEMBLY - Cabin air inlet, left	1	
	25350-00	V	BOX ASSEMBLY - Cabin air inlet, left	1	24-4247, 24-4300 and up
	24436-01	Z	BOX ASSEMBLY - Cabin air inlet, right	1	
	24436-01	BV	BOX ASSEMBLY - Cabin air inlet, right	1	
	25350-01	V	BOX ASSEMBLY - Cabin air inlet, right	1	24-4247, 24-4300 and up
-38	24311-00	AV	BRACKET ASSEMBLY - Regulator and relay mounting	1	
-39	20428-00		BULKHEAD - Fuselage aft section, top, left	1	
	20428-01		BULKHEAD - Fuselage aft section, top, right	1	
-40	25343-00	V	PLATE - Fuselage reinforcement, left	1	24-4247, 24-4300 and up
	25343-01	V	PLATE - Fuselage reinforcement, right	1	24-4247, 24-4300 and up
-41	25554-00	V	PLATE ASSEMBLY - Cockpit rear panel attachment, left	1	24-4247, 24-4300 and up
	25564-00	V	PLATE ASSEMBLY - Cockpit rear panel attachment, right	1	24-4247, 24-4300 and up
-42	25788-03		SHELF ASSEMBLY - Radio support and strobe light bracket support	1	

A - Used on PA-24-260 with serial numbers 24-3642, 24-4000 to 24-4782, 24-4784 to 24-4803 inclusive.
B - Used on PA-24-260 with serial numbers 24-3642, 24-4000 to 24-4246, 24-4248 to 24-4299 inclusive.
C - Used on PA-24-180 and PA-24-250 with serial numbers 24-2175, 24-2299 and up and PA-24-400 airplanes.
V - Used on PA-24-260 airplanes only.
X - Used on PA-24-180 airplanes only.
Y - Used on PA-24-250 airplanes only.
Z - Used on PA-24-400 airplanes only.

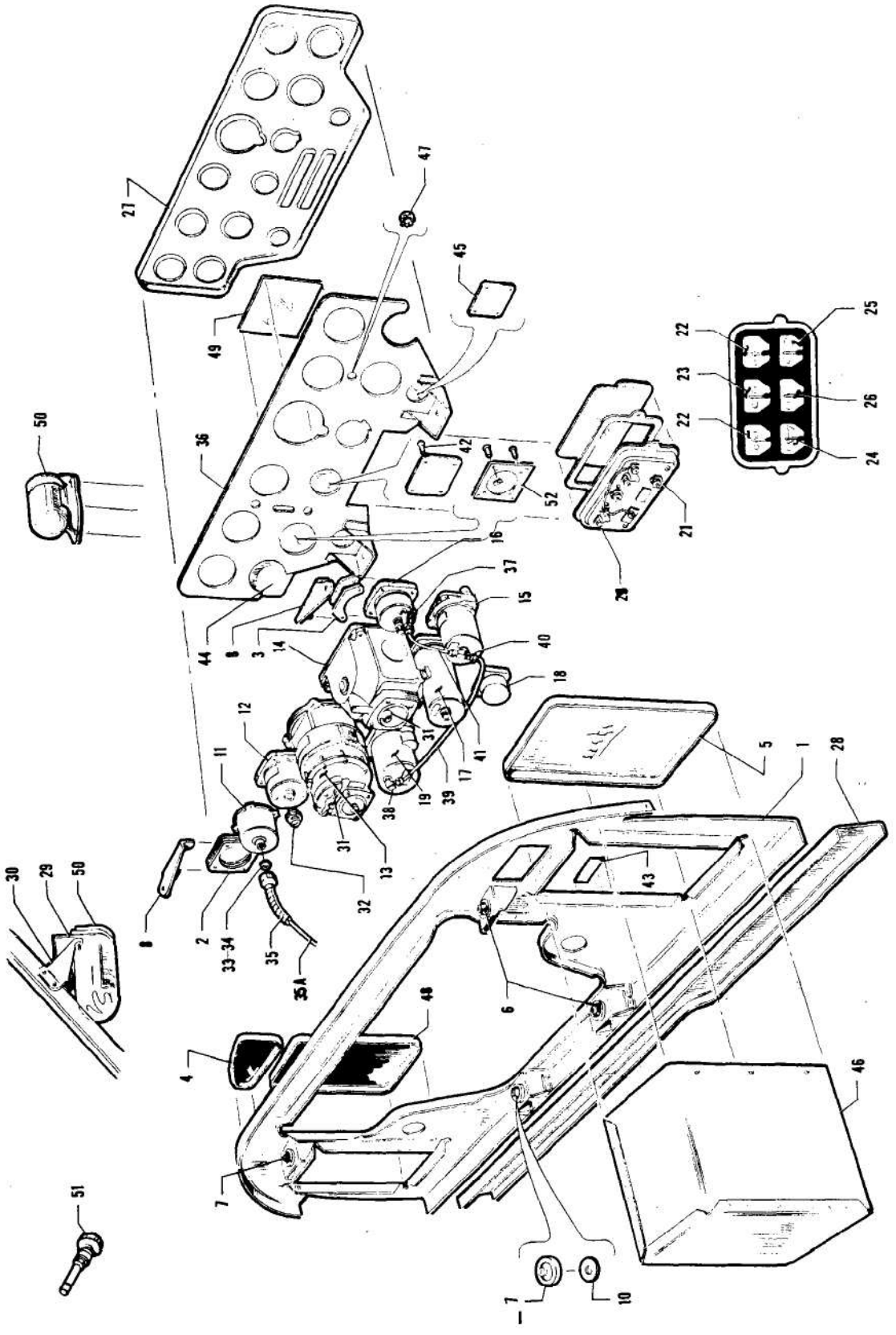

Figure 7. Instrument Panel Installation
(Serial Nos. 24-1 to 24-2174, 24-2176 to 24-2298 inclusive)

Figure and Index Number	Part Number	Code	NOMENCLATURE	No. Req.	SERIAL NUMBERS AFFECTED
7-	20644		DRAWING - Instruments Installation		
	20709		DRAWING - Instruments Installation (Advanced)		
-1	20572-00	A	PANEL ASSEMBLY - Instrument	1	
	20572-04	E	PANEL ASSEMBLY - Instrument	1	
-2	20508-00		SPACER - Instrument panel	3	
-3	20509-00		SPACER - Instrument panel	4	
-4	20606-00		PANEL ASSEMBLY - Instrument panel cover, upper, left (6-11/16 x 3-12/32)	1	
	20606-01		PANEL ASSEMBLY - Instrument panel cover, upper, right (6-11/16 x 3-12/32)	1	
	21650-03		PANEL ASSEMBLY - Instrument panel cover, upper, right (6-11/16 x 5-21/32)	1	
-5	20596-00		DOOR ASSEMBLY - Glove compartment	1	
-6	475 128		MOUNT - Shock (150PD-6)	2	
-7	475 127		MOUNT - Shock (150PD-4)	2	
-8	20482-00		ANGLE - Shock mount, left	1	
	20482-01		ANGLE - Shock mount, right	1	
-9	454 869		CLIP - Spring (CL-218)	13	
-10	81342-86		WASHER	4	
-11	450 646		INSTRUMENT - Tachometer "180"	1	
	450 721	A	INSTRUMENT - Tachometer "250"	1	
	450 728	B	INSTRUMENT - Tachometer "250"	1	
-12	751 118		INSTRUMENT - Manifold pressure (AN5770-1A)	1	
-13	450 634	CG	INSTRUMENT - Gyro horizon	1	
-14	450 635	CG	INSTRUMENT - Directional gyro (AN5735-1A)	1	
-15	32281-03		INSTRUMENT - Altimeter, sensitive (Scale in inches of mercury)	1	
	32281-04	F	INSTRUMENT - Altimeter, sensitive (Scale in millibars)	1	
-16	17419-03	D	INSTRUMENT - Airspeed "180"	1	24-1 to 24-76 inclusive
	17419-07		INSTRUMENT - Airspeed "180"	1	24-77 and up
	17419-06		INSTRUMENT - Airspeed "250"	1	
-17	450 704	C	INSTRUMENT - Turn and bank	1	
-18	450 698	C	INSTRUMENT - Clock	1	
-19	450 636	C	INSTRUMENT - Rate of climb	1	
-20	484 348		REDUCER - (AN919-0D)	1	
-21	20597-00		CLUSTER ASSEMBLY - Instrument	1	
-22	752 054		INSTRUMENT - Fuel gauge	2	
-23	752 055		INSTRUMENT - Fuel pressure	1	
-24	752 056		INSTRUMENT - Oil pressure	1	
-25	752 057		INSTRUMENT - Oil temperature	1	
-26	752 058		INSTRUMENT - Ammeter	1	

A - Used when O-540-A1A engine is installed.
B - Used when O-540-AJA5 engine is installed.
C - Used on advanced panel only.
D - Secure 17419-07 if Kit 754 191 has been installed.
E - Used when engine O-540-A1D is installed.
F - Optional equipment.

Figure and Index Number	Part Number	Code	NOMENCLATURE	No. Req.	SERIAL NUMBERS AFFECTED
7-27	20547-00		PANEL - Cover, "180"	1	24-1 to 24-102 inclusive
	20547-02		PANEL - Cover, "180"	1	24-103 to 24-655 inclusive
	20547-04		PANEL - Cover, "180"	1	24-656 to 24-1476 inclusive
	20547-06		PANEL - Cover, "180"	1	24-1477 and up
	20547-03		PANEL - Cover, "250"	1	24-105 to 24-655 inclusive
	20547-05		PANEL - Cover, "250"	1	24-656 to 24-1476 inclusive
	20547-07		PANEL - Cover, "250"	1	24-1477 and up
-28	21342-00		PANEL - Instrument panel placard	1	24-1 to 24-102 inclusive
	21599-00		PANEL - Instrument panel placard	1	24-103 to 24-1329 inclusive
	21599-02		PANEL - Instrument panel placard	1	24-1330 and up
-29	22197-00		BRACKET - Compass card holder, windshield mounting	1	24-1 to 24-2140 inclusive
-30	22198-00		BRACKET - Compass mounting, right windshield mounting	1	24-1 to 24-2140 inclusive
-31	755 824		PAD - Standard instrument filter AR (2 per instrument)	2	
-32	460 682		CONNECTOR - (W/H #48 x 4)	1	
-33	80122-81		WASHER - (.064)	1	
-34	80122-83		WASHER - (.032)	AR	
-35	486 575		SHAFT - Tachometer (35" long) "180"	1	24-1 to 24-1476 inclusive
	486 580		SHAFT - Tachometer (37-1/2" long) "180"	1	24-1477 and up
	486 576		SHAFT - Tachometer (30" long) "250"	1	24-105 and up
-35a	751 526	A	CORE - Tachometer shaft "180"	1	24-1 to 24-1476 inclusive
	751 543		CORE - Tachometer shaft "180"	1	24-1477 and up
	751 527		CORE - Tachometer shaft "250"	1	24-105 and up
-36	20520-00		PANEL ASSEMBLY - Instrument mounting	1	
-37	488 310		TEE - (AN826-3D)	1	
-38	458 893		ELBOW - (AN822-3D)	1	
-39	20650-00		LINE ASSEMBLY - Static air	1	
-40	488 310		TEE - (AN826-3D)	1	
-41	20650-00		LINE ASSEMBLY - Static air	1	
-42	487 594		STUD - Push rivet (#49356)	11	
-43	17899-03		PLACARD - Operating limitations	1	
-44	11199-07		PLATE - Instrument hole cover (3-1/4")	4	
-45	11203-02		PLATE - Instrument hole cover (2-3/8")	2	
-46	20589-00		COMPARTMENT ASSEMBLY - Glove	1	
-47	17962-04		BUTTON - Plug	1	
-48	20595-02		PANEL ASSEMBLY - Cover (6-11/16" x 8-17/32")	1	
	21858-00		PANEL ASSEMBLY - Cover (6-11/16" x 3-9/16")	1	
-49	20622-00		PLATE - Cover	1	
-50	450 712		COMPASS ASSEMBLY - (C-2400-L4P)	1	24-1 to 24-2140 inclusive
	450 739		COMPASS ASSEMBLY - (C-2350-DL4CM) Windshield mounting	1	
-51	751 145		GAUGE - Air temperature	1	
-52	11199-03		PLATE - Cover	1	24-1477 and up

A - Used with AC Spark Plug Tachometer Shaft only.

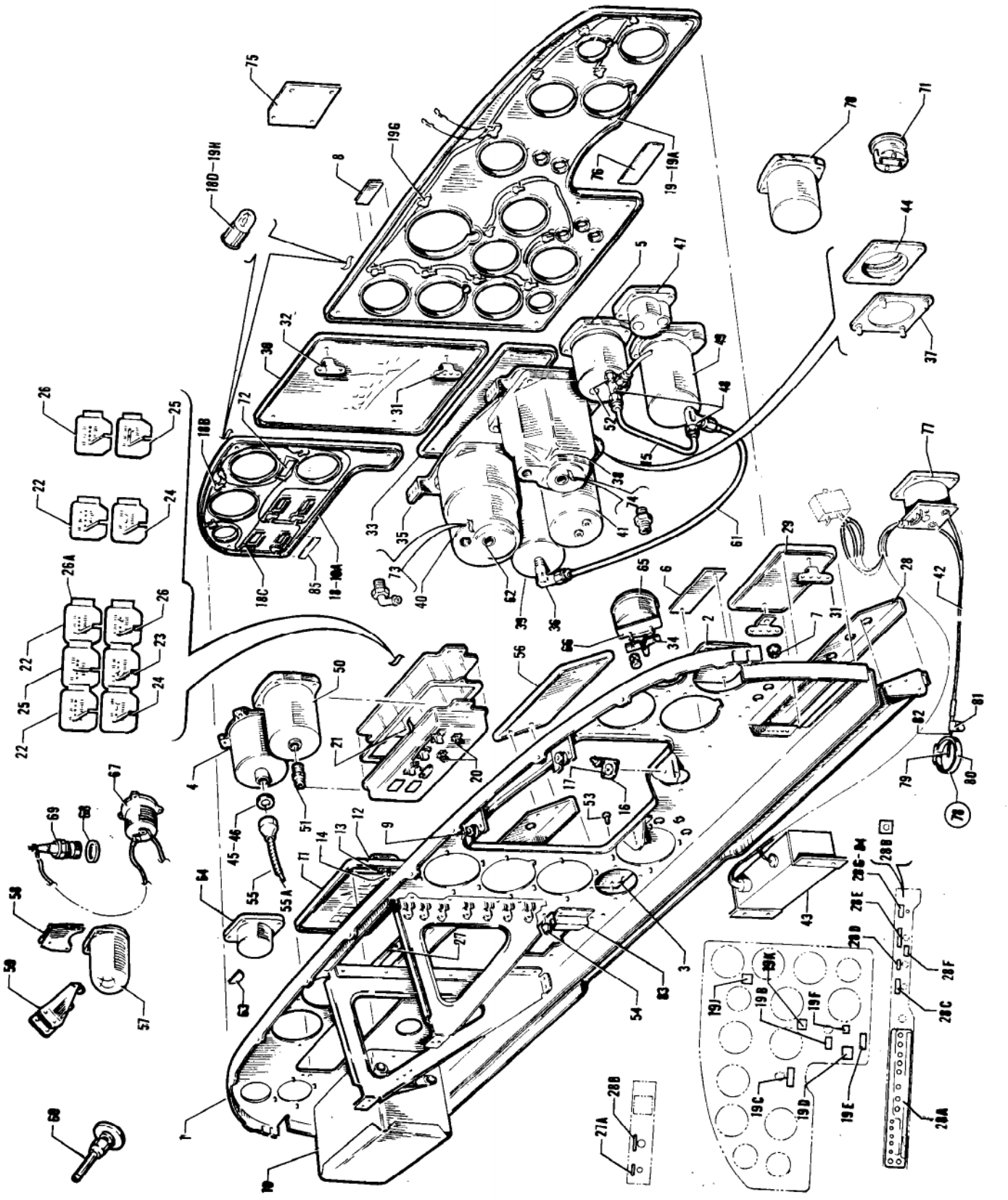

Figure 7A. Instrument Panel Installation
(PA-24-180 and PA-24-250 with serial numbers 24-2175, 24-2299 and up)
(PA-24-260 with serial numbers 24-3642, 24-4000 to 24-4782, 24-4784 to 24-4803 inclusive)
(PA-24-400 with serial numbers 26-2 and up)

Figure and Index Number	Part Number	Code	NOMENCLATURE	No. Req.	SERIAL NUMBERS AFFECTED
7A-	22310	XY	DRAWING - Instruments Installation		24-2175, 24-2299 to 24-2843
	22310	X	DRAWING - Instruments Installation		24-2844 to 24-3284 inclusive
	23365	X	DRAWING - Instruments Installation		24-3285 and up
	22848	VYZ	DRAWING - Instruments Installation		24-2844 to 24-4719 inclusive, 26-2 and up
	26323	V	DRAWING - Instruments Installation		24-4720 and up
	22384	XY	DRAWING - Instruments Installation (Advanced)		24-2175, 24-2299 to 24-2843
	22384	X	DRAWING - Instruments Installation (Advanced)		24-2844 to 24-3284 inclusive
	23366	X	DRAWING - Instruments Installation (Advanced)		24-3285 and up
	22849	VYZ	DRAWING - Instruments Installation (Advanced)		24-2844 to 24-4719 inclusive, 26-2 and up
	26324	V	DRAWING - Instruments Installation (Advanced)		24-4720 and up
-1	22053-00	X	PANEL ASSEMBLY - Instrument	1	24-2299 to 24-3284 inclusive
	22053-00	Y	PANEL ASSEMBLY - Instrument	1	24-2175, 24-2299 to 24-2843
	22779-00	X	PANEL ASSEMBLY - Instrument	1	24-3285 and up
	22779-00	Y	PANEL ASSEMBLY - Instrument	1	24-2844 and up
	22779-05	Z	PANEL ASSEMBLY - Instrument	1	
	22779-05	V	PANEL ASSEMBLY - Instrument	1	24-3642, 24-4000 to 24-4246 incl., 24-4248 to 24-4299 inclusive
	25589-00	V	PANEL ASSEMBLY - Instrument	1	24-4247, 24-4300 to 24-4566
	25669-00	V	PANEL ASSEMBLY - Instrument	1	24-4567 and up
-2	11199-06	X	PLATE - Cover	5	
	11199-07	VYZ	PLATE - Cover	5	
-3	11203-02		PLATE - Cover	2	
-4	13621-06	Y	INSTRUMENT - Tachometer	1	
	13621-04	VX	INSTRUMENT - Tachometer	1	
	13621-07	Z	INSTRUMENT - Tachometer	1	
-5	17419-06	VY	INSTRUMENT - Airspeed	1	24-1 to 24-4246 inclusive, 24-4248 to 24-4299 inclusive
	17419-16	V	INSTRUMENT - Airspeed	1	24-4247, 24-4300 to 24-4546
	17419-07	X	INSTRUMENT - Airspeed	1	
	17419-12	Z	INSTRUMENT - Airspeed	1	
	17419-18	V	INSTRUMENT - Airspeed (550 709)	1	24-4547 and up
	752 087	VY	INSTRUMENT - True airspeed (450 798) (30353-05)	1	24-1 to 24-4246 inclusive, 24-4248 to 24-4299 inclusive
	550 666	V	INSTRUMENT - True airspeed (30353-10)	1	24-4247, 24-4300 to 24-4546
	752 088	X	INSTRUMENT - True airspeed (450 797) (30353-04)	1	
	550 623	Z	INSTRUMENT - True airspeed (30353-03)	1	
	30353-13	V	INSTRUMENT - True airspeed (550 711)	1	24-4547 and up

A - Used on PA-24-180 and PA-24-250 with serial numbers 24-2175, 24-2299 and up, PA-24-260 with serial numbers 24-3642, 24-4000 to 24-4782, 24-4784 to 24-4803 inclusive, and PA-24-400 with serial numbers 26-2 and up.
V - Used on PA-24-260 airplanes only.
X - Used on PA-24-180 airplanes only.
Y - Used on PA-24-250 airplanes only.
Z - Used on PA-24-400 airplanes only.

Figure and Index Number	Part Number	Code	NOMENCLATURE	No. Req.	SERIAL NUMBERS AFFECTED
7A-6	17899-03	XY	PLACARD - Operating limitations	1	24-2175, 24-2299 to 24-2843
	19940-00	B	PLACARD - Operating limitations	1	
	17899-03	Y	PLACARD - Operating limitations	1	24-2844 to 24-3375 inclusive
-7	17962-03	XY	PLUG BUTTON - Black	3	24-2175, 24-2299 to 24-2843
	453 661	XY	PLUG BUTTON - (#51051) Nickel	3	24-2175, 24-2299 to 24-2843
	453 688	CYZ	PLUG BUTTON - Black	5	24-2844 and up, 26-2 and up
	17962-03	X	PLUG BUTTON - Black	3	24-2844 to 24-3284 inclusive
-8	19099-00		PLATE	1	
-9	19513-03		WASHER	4	
-10	19540-05		COMPARTMENT ASSEMBLY - Glove	1	
-11	19543-00		DOOR ASSEMBLY - Glove compartment	1	
-12	20590-00		HANDLE	1	
-13	20599-00		PLATE	1	
-14	487 545		STUD - Ball (#P116-421-16-27)	1	
-15	20650-00	XY	LINE ASSEMBLY - Air static	1	
	20650-00	Z	LINE ASSEMBLY - Air static	1	26-2 to 26-128 inclusive
	20650-00	V	LINE ASSEMBLY - Air static	1	24-3642, 24-4000 to 24-4072 incl.
	25136-00	VZ	LINE ASSEMBLY - Air static	1	24-4073 and up, 26-129 and up
-16	22055-00		BRACKET ASSEMBLY	2	
-17	475 126		MOUNTING - (#100 PD-4)	1	

A - Used on PA-24-180 and PA-24-250 with serial numbers 24-2175, 24-2299 and up, PA-24-260 with serial numbers 24-3642, 24-4000 to 24-4782, 24-4784 to 24-4803 inclusive, and PA-24-400 with serial numbers 26-2 and up.
B - Used on PA-24-180 with serial numbers 24-2844 to 24-3284 inclusive, 24-3376 and up, PA-24-250 with serial numbers 24-3376 and up, PA-24-400 and PA-24-260 airplanes.
C - Used on PA-24-180 with serial numbers 24-3285 and up, and PA-24-260.
V - Used on PA-24-260 airplanes only.
X - Used on PA-24-180 airplanes only.
Y - Used on PA-24-250 airplanes only.
Z - Used on PA-24-400 airplanes only.

Figure and Index Number	Part Number	Code	NOMENCLATURE	No. Req.	SERIAL NUMBERS AFFECTED
7A-18	22164-02	X	PANEL - Cover, right	1	24-2175, 24-2299 to 24-2843
	22164-03	Y	PANEL - Cover, right	1	24-2175, 24-2299 to 24-2843
	22164-02	X	PANEL - Cover, right	1	24-2844 to 24-3284 inclusive
	23015-00	X	PANEL - Cover, right	1	24-3285 and up
	23217-00	Y	PANEL - Cover, right	1	24-2844 and up
	23015-00	BY	PANEL - Cover, right	1	24-2844 and up
	22732-02	BCY	PANEL - Cover, right	1	
	23218-00	Z	PANEL - Cover, right	1	
	24887-02	EV	PANEL - Cover, right	1	
	25555-08	V	PANEL - Cover, right	1	24-4247, 24-4300 and up
	24887-03	CE	PANEL - Cover, right	1	
	25555-07	CV	PANEL - Cover, right	1	24-4247, 24-4300 and up
	23217-00	BE	PANEL - Cover, right	1	
	25555-05	BV	PANEL - Cover, right	1	24-4247, 24-4300 and up
	23218-00	BCE	PANEL - Cover, right	1	
	25555-03	BCV	PANEL - Cover, right	1	24-4247, 24-4300 and up
	24411-00	DZ	PANEL - Cover, right (complete)	1	
	25022-02	CDE	PANEL - Cover, right (complete)	1	
	25561-02	CDV	PANEL - Cover, right (complete)	1	24-4247, 24-4300 and up
	25022-03	BDE	PANEL - Cover, right (complete)	1	
	25561-03	BDV	PANEL - Cover, right (complete)	1	24-4247, 24-4300 and up
	25022-04	BCDE	PANEL - Cover, right (complete)	1	
	25561-04	BCDV	PANEL - Cover, right (complete)	1	24-4247, 24-4300 and up
-18a	24299-00	DZ	PANEL - Cover, right	1	
	24368-02	CDE	PANEL - Cover, right	1	
	25555-06	CDV	PANEL - Cover, right	1	24-4247, 24-4300 and up
	24368-03	BDE	PANEL - Cover, right	1	
	25555-04	BDV	PANEL - Cover, right	1	24-4247, 24-4300 and up
	24368-04	BCDE	PANEL - Cover, right	1	
	25555-02	BCDV	PANEL - Cover, right	1	24-4247, 24-4300 and up
-18b	484 326	DVZ	RECEPTACLE - (#GB-5952-3-LH-R)	1	
-18c	484 327	DZ	RECEPTACLE - (#GB-5952-3-RH-R)	7	
	484 327	DV	RECEPTACLE - (#GB-5952-3-RH-R)	3	
-18d	472 037	DZ	BULB - (#330)	8	
	472 037	DV	BULB - (#330)	4	

A - Used on PA-24-180 and PA-24-250 with serial numbers 24-2175, 24-2299 and up, PA-24-260 with serial numbers 24-3642, 24-4000 to 24-4782, 24-4784 to 24-4803 inclusive, and PA-24-400 with serial numbers 26-2 and up.
B - Used when cylinder head temperature gauge is installed.
C - Used when fuel injection is installed.
D - Used when Glar Ban lighting is installed.
E - Used on PA-24-260 with serial numbers 24-3642, 24-4000 to 24-4246 inclusive, and 24-4248 to 24-4299 inclusive.
V - Used on PA-24-260 airplanes only.
X - Used on PA-24-180 airplanes only.
Y - Used on PA-24-250 airplanes only.
Z - Used on PA-24-400 airplanes only.

Figure and Index Number	Part Number	Code	NOMENCLATURE	No. Req.	SERIAL NUMBERS AFFECTED
7A-19	22168-00	Y	PANEL - Cover, left	1	24-2175, 24-2299 to 24-2843
	22168-02	X	PANEL - Cover, left	1	24-2299 to 24-3284 inclusive
	22725-03	Y	PANEL - Cover, left	1	24-2844 and up
	22725-05	X	PANEL - Cover, left	1	24-3285 and up
	22725-00	VZ	PANEL - Cover, left	1	24-3642, 24-4000 to 24-4098, 26-2 and up
	22725-08	E	PANEL - Cover, left	1	
	25549-05	V	PANEL - Cover, left	1	24-4247, 24-4300 to 24-4719
	24993-03	CZ	PANEL - Cover, left	1	
	24993-03	EF	PANEL - Cover, left	1	
	25558-05	BFV	PANEL - Cover, left	1	
	25226-00	EG	PANEL - Cover, left	1	
	25559-05	GV	PANEL - Cover, left	1	24-4247, 24-4300 to 24-4366
	24410-00	DZ	PANEL - Cover, left (complete)	1	
	24410-03	DE	PANEL - Cover, left (complete)	1	
	25560-02	DV	PANEL - Cover, left (complete)	1	24-4247, 24-4300 to 24-4719
	24410-04	CDZ	PANEL - Cover, left (complete)	1	
	24410-04	DEF	PANEL - Cover, left (complete)	1	
	25560-03	DFV	PANEL - Cover, left (complete)	1	24-4247, 24-4300 and up
	24410-05	DEF	PANEL - Cover, left (complete)	1	
	25560-04	DGV	PANEL - Cover, left (complete)	1	24-4247, 24-4300 to 24-4366
-19a	24407-00	DZ	PANEL - Cover, left	1	
	24407-03	DE	PANEL - Cover, left	1	
	25549-04	DV	PANEL - Cover, left	1	24-4247, 24-4300 to 24-4719
	25003-03	CDZ	PANEL - Cover, left	1	
	25003-03	DEG	PANEL - Cover, left	1	
	25558-04	BDFV	PANEL - Cover, left	1	
	25225-00	DEG	PANEL - Cover, left	1	
	25559-04	DGV	PANEL - Cover, left	1	24-4247, 24-4300 to 24-4366

A - Used on PA-24-180 and PA-24-250 with serial numbers 24-2175, 24-2299 and up, PA-24-260 with serial numbers 24-3642, 24-4000 to 24-4782, 24-4784 to 24-4803 inclusive, and PA-24-400 with serial numbers 26-2 and up.
B - Optional on airplanes with serial numbers 24-4247, 24-4300 to 24-4719 inclusive, and standard on airplanes with serial numbers 24-4720 and up.
C - Used when 3 inch gyros are installed.
D - Used when Glar Ban lighting is installed.
E - Used on PA-24-260 with serial numbers 24-3642, 24-4000 to 24-4246 inclusive, and 24-4248 to 24-4299 inclusive.
F - Used when 3 inch gyros 550 625, 550 626, 550 644, 550 645, 550 776, 550 777, 550 778, 550 779, 550 780 or 550 781 are installed. See Figure 47 for positive identification of instruments.
G - Used when 3 inch gyros 25222-00, 25222-02 or 25229-00 are installed. See Figure 47 for positive identification of instruments.
V - Used on PA-24-260 airplanes only.
X - Used on PA-24-180 airplanes only.
Y - Used on PA-24-250 airplanes only.
Z - Used on PA-24-400 airplanes only.

Figure and Index Number	Part Number	Code	NOMENCLATURE	No. Req.	SERIAL NUMBERS AFFECTED
7A-19b	24934-00		PLACARD - Gear up	1	
-19c	24936-00		PLACARD - Stall warning	1	
-19d	24939-00		PLACARD - Maximum gear down	1	
-19e	24940-00		PLACARD - Gear down	1	
-19f	24960-00		PLACARD - Off position	1	
-19g	484 326	DZ	RECEPTACLE - (#GB-5952-3-LH-R)	13	
	484 326	BD	RECEPTACLE - (#GB-5952-3-LH-R)	13	
	484 326	DV	RECEPTACLE - (#GB-5952-3-LH-R)	2	24-4247, 24-4300 and up
	484 327	DV	RECEPTACLE - (#GB-5952-3-RH-R)	11	24-4247, 24-4300 and up
-19h	472 037	DVZ	BULB - (#330)	13	
-19j	27401-00	XY	PLACARD - Take-off	1	
-19k	27402-00	XY	PLACARD - Landing	1	
-20	484 348		REDUCER - (AN919-0D)	2	
-21	22199-00	XY	CLUSTER ASSEMBLY - Instrument	1	24-2175, 24-2299 to 24-2843
	22187-00	GY	CLUSTER ASSEMBLY - Instrument, auxiliary fuel	1	24-2175, 24-2299 to 24-2843
	23215-02	Y	CLUSTER ASSEMBLY - Instrument	1	24-2844 and up
	22199-00	X	CLUSTER ASSEMBLY - Instrument	1	24-2844 to 24-3284 inclusive
	23367-00	X	CLUSTER ASSEMBLY - Instrument	1	24-3285 and up
	22625-04	HY	CLUSTER ASSEMBLY - Instrument	1	24-2844 and up
	22625-03	HJY	CLUSTER ASSEMBLY - Instrument	1	
	22625-02	Z	CLUSTER ASSEMBLY - Instrument	1	
	23215-06	V	CLUSTER ASSEMBLY - Instrument (550 634)	1	
	23215-05	JV	CLUSTER ASSEMBLY - Instrument (550 636)	1	
	23215-04	HV	CLUSTER ASSEMBLY - Instrument (550 635)	1	
	23215-07	HJV	CLUSTER ASSEMBLY - Instrument (550 638)	1	
-22	752 054	XY	INSTRUMENT - Fuel gauge	2	24-2175, 24-2299 to 24-2843
	752 054	X	INSTRUMENT - Fuel gauge	2	24-2844 to 24-3039 inclusive
	752 080	CX	INSTRUMENT - Fuel gauge	2	24-3040 to 24-3284 inclusive
	752 064	GY	INSTRUMENT - Fuel gauge, auxiliary	4	24-2175, 24-2299 to 24-2843
	752 064	Y	INSTRUMENT - Fuel gauge	1	24-2844 to 24-3039 inclusive
	752 075	CEF	INSTRUMENT - Fuel gauge	1	

A - Used on PA-24-180 and PA-24-250 with serial numbers 24-2175, 24-2299 and up, PA-24-260 with serial numbers 24-3642, 24-4000 to 24-4782, 24-4784 to 24-4803 inclusive, and PA-24-400 with serial numbers 26-2 and up.
B - Used on PA-24-260 with serial numbers 24-3642, 24-4000 to 24-4246 inclusive, 24-4248 to 24-4299 inclusive.
C - These instruments have white markings.
D - Used when Glar Ban lighting is installed.
E - Used on PA-24-250 with serial numbers 24-3040 and up, and PA-24-400 and PA-24-260 airplanes.
F - Used on PA-24-180 with serial numbers 24-3285 and up.
G - Optional equipment, used only when auxiliary fuel system is installed.
H - Used when cylinder head temperature gauge is installed.
J - Used when fuel injection is installed.
V - Used on PA-24-260 airplanes only.
X - Used on PA-24-180 airplanes only.
Y - Used on PA-24-250 airplanes only.
Z - Used on PA-24-400 airplanes only.

Figure and Index Number	Part Number	Code	NOMENCLATURE	No. Req.	SERIAL NUMBERS AFFECTED
7A-23	752 055	XY	INSTRUMENT - Fuel pressure	1	24-2175, 24-2299 to 24-3039
	752 076	EVXY	INSTRUMENT - Fuel pressure	1	24-3040 and up
-24	752 056	XY	INSTRUMENT - Oil pressure	1	24-2175, 24-2299 to 24-3039
	32529-00	E	INSTRUMENT - Oil pressure	1	24-3040 and up, 26-2 and up
-25	752 057	XY	INSTRUMENT - Oil temperature	1	24-2175, 24-2299 to 24-3039
	752 078	EXYZ	INSTRUMENT - Oil temperature	1	24-3040 and up, 26-2 and up
	752 078	EV	INSTRUMENT - Oil temperature	1	
-26	752 058	XY	INSTRUMENT - Ammeter	1	24-2175, 24-2299 to 24-3039
	752 079	CXY	INSTRUMENT - Ammeter	1	24-3040 and up
-26a	23268-00	Y	INSTRUMENT - Cylinder head temperature	1	24-2844 and up
	751 873	Z	INSTRUMENT - Cylinder head temperature	1	
	32531-00	V	INSTRUMENT - Cylinder head temperature	1	
-27	22218-00	VXY	PANEL - Instrument panel placard, right	1	
	22218-03	Z	PANEL - Instrument panel placard, right	1	
-27a	24979-00	VXY	PLACARD - Primer	1	
-27b	24980-00		PLACARD - Lighter	1	
-28	22224-00	XY	PANEL - Instrument panel placard, left	1	24-2175, 24-2299 to 24-2843
	22224-00	X	PANEL - Instrument panel placard, left	1	24-2844 to 24-3284 inclusive
	22660-04	Y	PANEL - Instrument panel placard, left	1	24-2844 to 24-3284 inclusive
	22660-06	X	PANEL - Instrument panel placard, left	1	24-3285 and up
	22660-08	Y	PANEL - Instrument panel placard, left	1	24-3285 and up
	24378-00	BZ	PANEL - Instrument panel placard, left	1	
	24378-02	DZ	PANEL - Instrument panel placard, left	1	
	24902-00	V	PANEL - Instrument panel placard, left	1	
	24902-02	FV	PANEL - Instrument panel placard, left	1	
-28a	24972-00	V	PLACARD - Circuit breakers	1	
	24972-00	BZ	PLACARD - Circuit breakers	1	
	25294-00	DZ	PLACARD - Circuit breakers	1	
-28b	24973-00	Z	PLACARD - Cowl flaps	1	
-28c	24974-00	VZ	PLACARD - Mixture	1	
-28d	24975-00	VZ	PLACARD - Throttle	1	
-28e	24976-00	VZ	PLACARD - Propeller control	1	
-28f	24978-00	VZ	PLACARD - Propeller control, push	1	
-28g	24977-00	V	PLACARD - Carburetor heat	1	

A - Used on PA-24-180 and PA-24-250 with serial numbers 24-2175, 24-2299 and up, PA-24-260 with serial numbers 24-3642, 24-4000 to 24-4782, 24-4784 to 24-4803 inclusive, and PA-24-400 with serial numbers 26-2 and up.
B - Used if Kit 756 922 has not been installed per Service Letter #451.
C - Used when fuel injection is installed.
D - Used if Kit 756 922 has been installed per Service Letter #451.
E - These instruments have white markings.
F - Used when Alternate Air Induction Kit is installed.
V - Used on PA-24-260 airplanes only.
X - Used on PA-24-180 airplanes only.
Y - Used on PA-24-250 airplanes only.
Z - Used on PA-24-400 airplanes only.

Figure and Index Number	Part Number	Code	NOMENCLATURE	No. Req.	SERIAL NUMBERS AFFECTED
7A-29	22330-00	XY	PLATE - Cover	1	24-2175, 24-2299 to 24-2843
	22330-00	X	PLATE - Cover	1	24-2844 to 24-3284 inclusive
	22462-02	HVYZ	PLATE - Cover	1	24-2844 and up, 26-2 and up
-30	22341-00		PLATE - Cover	1	
-31	22344-00		CLIP - Cover plate	4	
-32	22345-00		CLIP - Cover plate	2	
-33	22349-02	GXY	PLATE - Cover	1	
	22349-05	XY	PLATE - Cover	1	24-2511 to 24-3469 inclusive
	23545-00		PLATE - Cover	1	24-3470 and up, 26-2 and up
-34	487 350	VYZ	SEPARATOR - Terminal	1	24-2844 and up, 26-2 and up
-35	22056-00	XYZ	PANEL ASSEMBLY - Gyro insert	1	
	22056-00	BV	PANEL ASSEMBLY - Gyro insert	1	
	22056-03	V	PANEL ASSEMBLY - Gyro insert	1	24-4247, 24-4300 to 24-4719
	24999-00	CZ	PANEL ASSEMBLY - Gyro insert	1	
	24999-00	BDV	PANEL ASSEMBLY - Gyro insert	1	
	25227-00	BEV	PANEL ASSEMBLY - Gyro insert	1	
	24999-03	DV	PANEL ASSEMBLY - Gyro insert	1	24-4247, 24-4300 to 24-4366
	25227-03	EV	PANEL ASSEMBLY - Gyro insert	1	24-4247, 24-4300 to 24-4366
	24999-05	V	PANEL ASSEMBLY - Gyro insert	1	24-4367 to 24-4566 inclusive
	25713-00	V	PANEL ASSEMBLY - Gyro insert	1	24-4567 to 24-4719 inclusive
	26320-00		PANEL ASSEMBLY - Gyro insert	1	24-4720 and up
-36	458 893		ELBOW - (AN822-3D)	1	
	488 310	C	TEE - (AN826-3D)	1	
-37	26273-00	V	PLATE ASSEMBLY - Mounting (Mitchell turn and bank)	1	
-38	450 635	FXY	INSTRUMENT - Directional gyro	1	
	550 647	FVZ	INSTRUMENT - Directional gyro (31699-00)	1	24-3642, 24-4000 to 24-4719, 26-2 and up
	755 427	V	INSTRUMENT - Directional gyro, 3 inch	1	24-4720 and up
-39	450 749	XY	INSTRUMENT - Rate of climb	1	
	41706-02	VZ	INSTRUMENT - Rate of climb (550 808)	1	

A - Used on PA-24-180 and PA-24-250 with serial numbers 24-2175, 24-2299 and up, PA-24-260 with serial numbers 24-3642, 24-4000 to 24-4782, 24-4784 to 24-4803 inclusive, and PA-24-400 with serial numbers 26-2 and up.
B - Used on PA-24-260 with serial numbers 24-3642, 24-4000 to 24-4246 inclusive, 24-4248 to 24-4299 inclusive.
C - Used when 3 inch gyros are installed.
D - Used when 3 inch gyros 550 625, 550 626, 550 644, 550 645, 550 776, 550 777, 550 778, 550 779, 550 780 or 550 781 are installed. See Figure 47 for positive identification of instruments.
E - Used when 3 inch gyros 25222-00, 25222-02 or 25229-00 are installed. See Figure 47 for positive identification of instruments.
F - No longer available.
G - Used on airplanes with serial numbers 24-2175, 24-2299 to 24-2510 inclusive.
H - Used on PA-24-180 airplanes with serial numbers 24-3285 and up.
V - Used on PA-24-260 airplanes only.
X - Used on PA-24-180 airplanes only.
Y - Used on PA-24-250 airplanes only.
Z - Used on PA-24-400 airplanes only.

When ordering, always specify Part Number, Description and Serial Number of Aircraft

PILOTEN-SERVICE
Straubing LBA II-A-170
Telefon (09421) 716

Figure and Index Number	Part Number	Code	NOMENCLATURE	No. Req.	SERIAL NUMBERS AFFECTED
7A-40	450 634	EXY	INSTRUMENT - Gyro horizon	1	
	550 646	EVZ	INSTRUMENT - Gyro horizon (31698-00)	1	24-3642, 24-4000 to 24-4719, 26-2 and up
	755 428	V	INSTRUMENT - Gyro horizon, 3 inch	1	24-4720 and up
-41	450 704	XYZ	INSTRUMENT - Turn and bank (#12P61-A2A-S1)	1	
	450 704	V	INSTRUMENT - Turn and bank (#12P61-A2A-S1)	1	24-3642, 24-4000 to 24-4246 incl., 24-4248 to 24-4299 inclusive
	450 788	V	INSTRUMENT - Turn and bank (R. C. Allen #A2475-2)	1	24-4247, 24-4300 and up
	550 782	V	INSTRUMENT - Pictorial turn and bank (Mitchell #52D69)	1	
-42	753 212		WIRE ASSEMBLY - Mixture control gauge	1	
-43	751 291		AMPLIFIER ASSEMBLY - Mixture control gauge	1	
-44	26272-00	V	PLATE - Trim (Mitchell turn and bank)	1	
-45	80122-81		WASHER	1	
-46	80122-83		WASHER	1	
-47	450 689		INSTRUMENT - Clock (MILC-7939)	1	
-48	488 310		TEE - (AN826-3D)	2	
-49	32281-03		INSTRUMENT - Altimeter, sensitive (Scale in inches of mercury)	1	
	32281-04		INSTRUMENT - Altimeter, sensitive (Scale in millibars)	1	
-50	751 118		INSTRUMENT - Manifold pressure (AN5770-1A)	1	
-51	460 682		CONNECTOR - (W/H #48 x 4)	1	
-52	451 854		ADAPTER - (W/H #3200 x 2)	1	
-53	487 594		STUD - Rivet (#HS49356-K2215)	27	
-54	406 784		NUT - Banc-lak (T71D050-632)	1	
-55	486 575	VYZ	SHAFT - Tachometer (35" long)	1	
	486 582	X	SHAFT - Tachometer (42-1/2" long)	1	
-55a	751 526	D	CORE - Tachometer shaft	1	
	753 829	X	CORE - Tachometer shaft	1	
-56	22221-00	XY	PLATE - Cover	1	24-2175, 24-2299 to 24-2510
	22221-03	C	PLATE - Cover	1	24-2511 and up
	23074-00	B	PLATE - Cover	1	
-57	450 739		COMPASS ASSEMBLY - (C-2350DL4-CM)	1	
-58	22197-00		BRACKET ASSEMBLY - Compass card holder	1	
-59	22198-00		BRACKET - Compass mounting, left	1	
	22198-01		BRACKET - Compass mounting, right	1	
-60	751 145		GAUGE - Air temperature (450 662)	1	
-61	20650-03		LINE ASSEMBLY - Air static (Advanced)	1	
-62	755 825		PAD - AutoControl instrument filter (2 per instrument)	AR	

A - Used on PA-24-180 and PA-24-250 with serial numbers 24-2175, 24-2299 and up, PA-24-260 with serial numbers 24-3642, 24-4000 to 24-4782, 24-4784 to 24-4803 inclusive, and PA-24-400 with serial numbers 26-2 and up.
B - Used when DME and Glide Slope are installed.
C - Used when two ADF units are installed.
D - Used on PA-24-250, PA-24-260 and PA-24-400 with AC Spark Plug Tachometer Shaft only.
E - No longer available.
V - Used on PA-24-260 airplanes only.
X - Used on PA-24-180 airplanes only.
Y - Used on PA-24-250 airplanes only.
Z - Used on PA-24-400 airplanes only.

Figure and Index Number	Part Number	Code	NOMENCLATURE	No. Req.	SERIAL NUMBERS AFFECTED
7A-63	22038-00	XY	PLACARD - Carburetor air temperature gauge	1	
-64	450 710	XY	INDICATOR - Carburetor air temperature	1	
-65	450 777	VYZ	INDICATOR - Flap (23167-00)	1	
-66	487 570	VYZ	STRAP - Mounting	1	24-2844 and up, 26-2 and up
-67	450 786	X	INSTRUMENT - Cylinder head temperature (23390)	1	
-68	462 018		GASKET - Cylinder head temperature gauge (AC-1556847)	1	
-69	462 044		ENGINE UNIT - Cylinder head temperature gauge (AC-1514340)	1	
-70	24395-00	Z	GAUGE ASSEMBLY - Fuel flow (550 621)	1	
	25144-00	V	GAUGE ASSEMBLY - Fuel flow (550 651)	1	
-71	31101-00	VZ	INSTRUMENT - Ammeter (550 609)	1	
-72	24907-00	Z	PLACARD - Manifold pressure	1	
-73	558 913		ELBOW - 60° (1K9-4-6) Gyro horizon	1	
	458 945		ELBOW - 90° (1K1-4-6) Gyro horizon	1	
-74	451 939		ADAPTER - (1K10-4-6) Directional gyro	1	
	458 945		ELBOW - 90° (1K1-4-6) Directional gyro	1	
-75	11203-02	D	PLATE ASSEMBLY - Cover	1	
-76	24941-00		PLACARD - Parking brake	1	
-77	752 120	B	GAUGE ASSEMBLY - Mixture control indicator	1	
	751 915	C	GAUGE ASSEMBLY - Mixture control indicator	1	
-78	756 907		THERMOCOUPLE ASSEMBLY - (With mounting kit)	1	
-79	756 307		THERMOCOUPLE - (Less mounting kit)	1	
-80	753 948		CLAMP - Thermocouple probe attachment	1	
-81	753 949		CLAMP ASSEMBLY - Thermocouple probe attachment	1	
-82	756 256		MOUNTING SLEEVE - Thermocouple probe attachment	1	
-83	25684-00	V	BRACKET - Cover panel attachment	1	24-4567 and up
-84	24955-00	EV	PLACARD - Alternate air induction	1	
-85	27222-00	EV	PLACARD - Alternate air induction	1	

A - Used on PA-24-180 and PA-24-250 with serial numbers 24-2175, 24-2299 and up, PA-24-260 with serial numbers 24-3642, 24-4000 to 24-4782, 24-4784 to 24-4803 inclusive, and PA-24-400 with serial numbers 26-2 and up.
B - Used if mixture control gauge amplifier is not installed.
C - Used if mixture control gauge amplifier is installed.
D - Used when Omni Coupler is not installed.
E - Used when Alternate Air Induction Kit is installed.
V - Used on PA-24-260 airplanes only.
X - Used on PA-24-180 airplanes only.
Y - Used on PA-24-250 airplanes only.
Z - Used on PA-24-400 airplanes only.

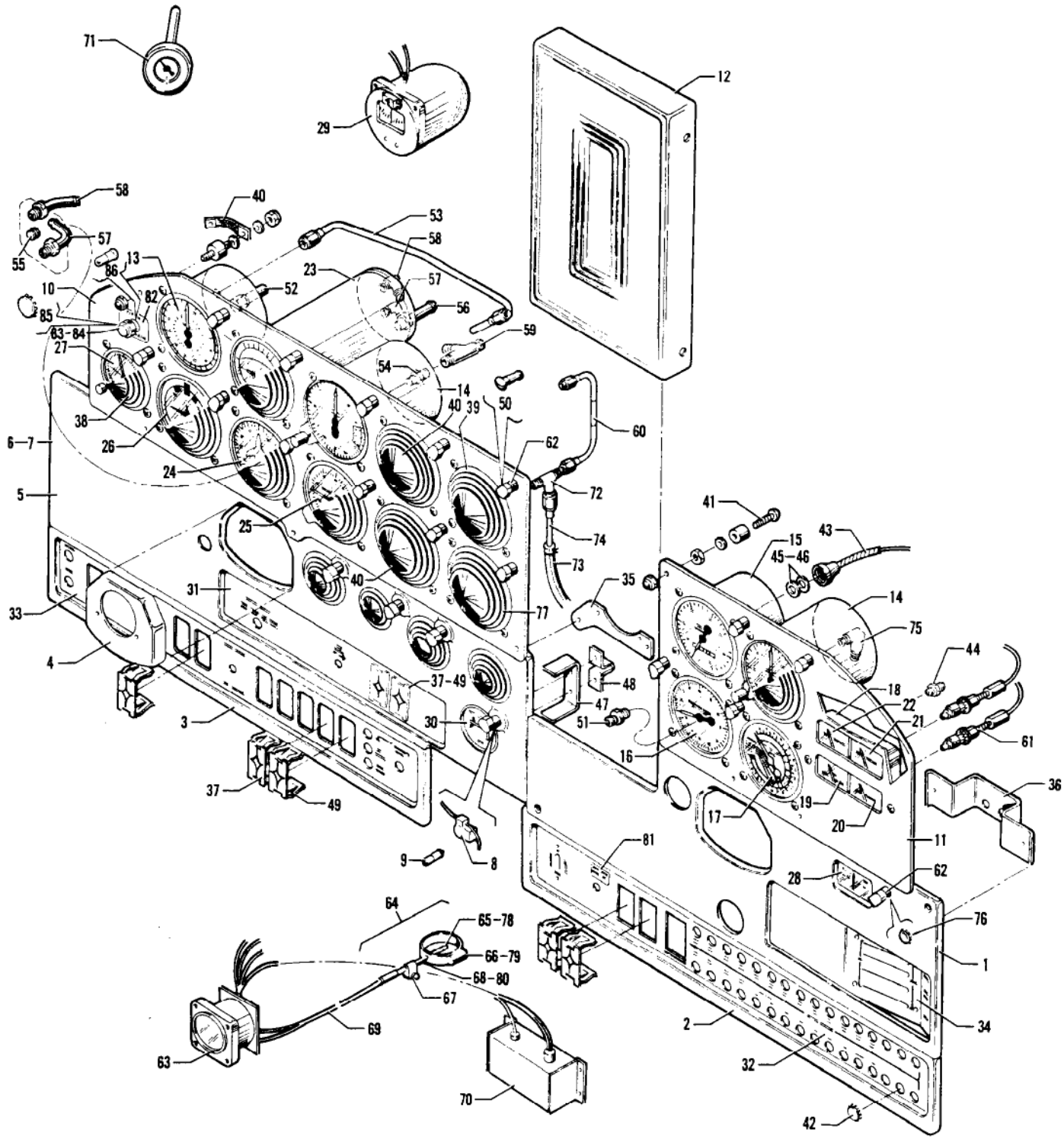

Figure 7B. Instrument Panel Installation
(Serial Nos. 24-4783, 24-4804 and up)

Figure and Index Number	Part Number	Code	NOMENCLATURE	No. Req.	SERIAL NUMBERS AFFECTED
7B-	26704		DRAWING - Instruments Installation		
	26868		DRAWING - Instruments Installation (Advanced)		
	26887		DRAWING - Glar Ban Lights Installation		
-1	26398-07		COVER - Instrument panel, right, red	1	
	26398-08		COVER - Instrument panel, right, blue	1	
	26398-09		COVER - Instrument panel, right, black	1	
	26398-10		COVER - Instrument panel, right, beige	1	
	26398-11		COVER - Instrument panel, right, white	1	
	26398-22	A	COVER - Instrument panel, right, red	1	
	26398-23	A	COVER - Instrument panel, right, blue	1	
	26398-24	A	COVER - Instrument panel, right, black	1	
	26398-25	A	COVER - Instrument panel, right, beige	1	
	26398-26	A	COVER - Instrument panel, right, white	1	
	26398-27	B	COVER - Instrument panel, right, red	1	
	26398-28	B	COVER - Instrument panel, right, blue	1	
	26398-29	B	COVER - Instrument panel, right, black	1	
	26398-30	B	COVER - Instrument panel, right, beige	1	
	26398-31	B	COVER - Instrument panel, right, white	1	
-2	26429-02		COVER - Circuit breaker panel, beige	1	
	26429-03		COVER - Circuit breaker panel, black	1	
	26429-04		COVER - Circuit breaker panel, white	1	
-3	26511-02		COVER - Switch panel, beige	1	
	26511-03		COVER - Switch panel, black	1	
	26511-04		COVER - Switch panel, white	1	
-4	26523-04		COVER - Control wheel shaft, red	2	
	26523-03		COVER - Control wheel shaft, blue	2	
	26523-06		COVER - Control wheel shaft, black	2	
	26523-05		COVER - Control wheel shaft, beige	2	
	26523-02		COVER - Control wheel shaft, white	2	
-5	26820-02		COVER - Instrument panel, left, red	1	
	26820-06		COVER - Instrument panel, left, blue	1	
	26820-10		COVER - Instrument panel, left, black	1	
	26820-14		COVER - Instrument panel, left, beige	1	
	26820-18		COVER - Instrument panel, left, white	1	
-6	26692-03	CD	COVER ASSEMBLY - Instrument panel, Glar Ban, left, red	1	
	26692-05	CD	COVER ASSEMBLY - Instrument panel, Glar Ban, left, blue	1	
	26692-07	CD	COVER ASSEMBLY - Instrument panel, Glar Ban, left, black	1	
	26692-09	CD	COVER ASSEMBLY - Instrument panel, Glar Ban, left, beige	1	
	26692-11	CD	COVER ASSEMBLY - Instrument panel, Glar Ban, left, white	1	
	27035-02	C	COVER ASSEMBLY - Instrument panel, Glar Ban, left, red	1	24-4863, 24-4867 and up
	27035-03	C	COVER ASSEMBLY - Instrument panel, Glar Ban, left, blue	1	24-4863, 24-4867 and up
	27035-04	C	COVER ASSEMBLY - Instrument panel, Glar Ban, left, black	1	24-4863, 24-4867 and up
	27035-05	C	COVER ASSEMBLY - Instrument panel, Glar Ban, left, beige	1	24-4863, 24-4867 and up
	27035-06	C	COVER ASSEMBLY - Instrument panel, Glar Ban, left, white	1	24-4863, 24-4867 and up

A - Used when AutoControl III is installed.
B - Used when AltiMatic III B or AltiMatic III B-1 is installed.
C - Used when Glar Ban lights are installed.
D - Used on airplanes with serial numbers 24-4783, 24-4804 to 24-4862 inclusive, 24-4864 to 24-4866 inclusive.

Figure and Index Number	Part Number	Code	NOMENCLATURE	No. Req.	SERIAL NUMBERS AFFECTED
7B-7	26820-03	C	COVER - Instrument panel, left, red	1	
	26820-07	C	COVER - Instrument panel, left, blue	1	
	26820-11	C	COVER - Instrument panel, left, black	1	
	26820-15	C	COVER - Instrument panel, left, beige	1	
	26820-19	C	COVER - Instrument panel, left, white	1	
-8	484 278	C	RECEPTACLE - (GB-5952-3RH-CW)	4	
-9	472 054	C	LAMP - Indicator (PS10008-330)	4	
-10	26362-10	A	PANEL - Instrument panel, left	1	
	26362-09	AD	PANEL - Instrument panel, left	1	
	27030-02		PANEL - Instrument panel, left	1	24-4863, 24-4867 to 24-4964
	27030-03	B	PANEL - Instrument panel, left	1	24-4965 to 24-5018 inclusive
	27288-00		PANEL - Instrument panel, left	1	24-5019 and up
-11	26469-06		PANEL - Instrument panel, right	1	
-12	26779-00		PANEL - Instrument panel opening cover	1	
-13	17419-23		INSTRUMENT - Airspeed	1	
	30353-17		INSTRUMENT - True airspeed	1	
	30353-19	E	INSTRUMENT - True airspeed	1	
-14	32281-03		INSTRUMENT - Altimeter, sensitive (Scale in inches of mercury)	1	
	32281-04		INSTRUMENT - Altimeter, sensitive (Scale in millibars)	1	
-15	13621-04		INSTRUMENT - Tachometer	1	
-16	751 118		INSTRUMENT - Manifold pressure (AN5770-1A)	1	
	27149-00	E	INSTRUMENT - Manifold pressure (550 583)	1	
-17	26988-00		GAUGE ASSEMBLY - Fuel flow (550 835)	1	
	26988-02	E	GAUGE ASSEMBLY - Fuel flow (550 590)	1	
-18	26479-03		CLUSTER ASSEMBLY - Instrument (550 801)	1	
-19	32531-00		GAUGE ASSEMBLY - Cylinder head temperature	1	
-20	752 075		GAUGE ASSEMBLY - Fuel quantity	1	
-21	752 078		GAUGE ASSEMBLY - Oil temperature	1	
-22	32529-00		GAUGE ASSEMBLY - Oil pressure	1	
-23	755 428		INSTRUMENT - Gyro horizon, 3 inch	1	
-24	755 427		INSTRUMENT - Directional gyro, 3 inch	1	
-25	41706-02		INSTRUMENT - Rate of climb (550 808)	1	
-26	450 788		INSTRUMENT - Turn and bank (R. C. Allen #A2475-2)	1	
	32737-02		INSTRUMENT - Pictorial turn and bank (Mitchell) (550 790)	1	24-4783, 24-4804 to 24-4954 incl.
	32737-04		INSTRUMENT - Pictorial turn and bank (Mitchell) (550 588)	1	24-4955 and up
-27	450 706		INSTRUMENT - Clock	1	
-28	26992-00		INSTRUMENT - Ammeter	1	
-29	550 804		COMPASS ASSEMBLY - (C-2350DL4-CMB)	1	
-30	450 777		INDICATOR - Flap (23167-00)	1	

A - Used on airplanes with serial numbers 24-4783, 24-4804 to 24-4862 inclusive, 24-4864 to 24-4866 inclusive.
B - Used when AltiMatic III or AltiMatic III B is installed.
C - Used when Glar Ban lights are installed.
D - Used when Narco UAT-1 Transponder with UTC-1 Control Unit is installed.
E - Used when RaJay Turbocharger is installed.

When ordering, always specify Part Number, Description and Serial Number of Aircraft

Figure and Index Number	Part Number	Code	NOMENCLATURE	No. Req.	SERIAL NUMBERS AFFECTED
7B-31	26423-00		PLACARD - Parking brake and map light	1	24-3642, 24-4000 to 24-5018 incl.
	26422-00	B	PLACARD - Parking brake and AutoPilot selector	1	
	26418-00	C	PLACARD - Parking brake and AutoPilot selector	1	
	26418-02		PLACARD - Parking brake and AutoPilot selector	1	24-5019 and up
-32	27049-00	D	PLACARD - Circuit breaker panel	1	
	27049-02	E	PLACARD - Circuit breaker panel	1	
-33	26527-00		PLACARD - Switch panel	1	
-34	26855-00		PLACARD - Heater and ventilation	1	
-35	26822-00		BRACKET - Omni coupler support	1	
-36	27063-00		BRACKET ASSEMBLY - Ammeter support	1	
-37	32510-00		PLATE - Cover	8	
-38	41679-00		PLATE - Cover	5	
-39	41678-00		PLATE - Cover	6	
-40	41678-00		PLATE - Cover	2	24-4783, 24-4804 to 24-5018
	52798-02		PLATE - Cover	2	24-5019 and up
-41	406 704		NUT - Cap, dull black (#22-K1-82)	4	
	404 833		NUT - (MS20364-832C)	4	
	14843-113		BUSHING	4	
	407 134		WASHER - (AN936-AB)	4	
	415 453		SCREW - Machine (AN526-832R14)	4	
-42	453 799		PLUG - Button (#SS51043)	19	
-43	42800-03		SHAFT - Tachometer	1	
-44	484 348		REDUCER - (AN919-0D)	1	
-45	80122-81		WASHER	1	
-46	80122-83		WASHER	AR	
-47	487 726		STRAP - Mounting (#6460429)	1	
-48	487 350		SEPARATOR - Terminal (#1515642)	1	
-49	453 424		BRACKET - Narrow snap in "F"	6	
-50	26870-00		BUTTON - Plug	15	
-51	460 682		CONNECTOR - (W/H #48 x 4)	1	
-52	17881-04		LINE ASSEMBLY - Airspeed indicator	1	
-53	26577-00		LINE ASSEMBLY - Airspeed indicator to altimeter	1	
-54	476 647		NIPPLE - Altimeter (AN816-3D)	1	
-55	24712-02		PLUG - Directional gyro (581 212)	1	
-56	451 939		ADAPTER - Gyro horizon (1K10-4-6)	1	
-57	558 936		ELBOW - (1K45-1)	2	
-58	558 937		ELBOW - (1K46-1)	2	
-59	488 310		TEE - Rate of climb (AN826-3D)	1	
-60	26549-00		LINE ASSEMBLY - Altimeter to rate of climb	1	
-61	26753-00	A	BOLT LIGHT ASSEMBLY	2	
-62	472 776	A	BOLT LIGHT - (#P-65-3-CW-14)	16	

550 835

550590

A - Used when Glar Ban lights are installed.
B - Used when AutoControl III and Radio Coupler are installed.
C - Used when AltiMatic IIIB is installed.
D - Used if Glide Slope is installed.
E - Used if Glide Slope is not installed.

When ordering, always specify Part Number, Description and Serial Number of Aircraft

Figure and Index Number	Part Number	Code	NOMENCLATURE	No. Req.	SERIAL NUMBERS AFFECTED
7B-63	751 915	B	GAUGE ASSEMBLY - Mixture control indicator (Delta)	1	
	755 004		GAUGE ASSEMBLY - Mixture control indicator (Radair)	1	24-4863, 24-4867 and up
-64	756 907	B	THERMOCOUPLE ASSEMBLY - (with mounting kit) (Delta)	1	
-65	756 307	B	THERMOCOUPLE - (less mounting kit) (Delta)	1	
-66	753 948	B	CLAMP - Thermocouple probe attachment (Delta)	1	
-67	753 949	B	CLAMP ASSEMBLY - Thermocouple probe attachment (Delta)	1	
-68	756 256	B	MOUNTING SLEEVE - Thermocouple probe attachment (Delta)	1	
-69	753 212	B	WIRE ASSEMBLY - Mixture control gauge (Delta)	1	
	756 633		WIRE ASSEMBLY - Mixture control gauge (Radair)	1	24-4863, 24-4867 and up
-70	751 291	B	AMPLIFIER ASSEMBLY - Mixture control gauge (Delta)	1	
-71	751 145		GAUGE - Air temperature (450 662)	1	
-72	488 310		TEE - Dual altimeter (AN826-3D)	1	
-73	83161-17		HOSE - Dual altimeter	1	
-74	17881-04		LINE ASSEMBLY - Dual altimeter	2	
-75	458 893		ELBOW - Dual altimeter (AN822-3D)	1	
-76	453 694		BUTTON - Plug (#D3005)	1	
-77	41678-00	B	PLATE - Cover	1	
	43086-02	AB	PLATE - Cover	1	
	41679-00		PLATE - Cover	1	24-4863, 24-4867 to 24-5018
	41678-00		PLATE - Cover	1	24-5019 and up
-78	756 337		THERMOCOUPLE - Exhaust gas temperature (Radair)	1	24-4863, 24-4867 and up
-79	757 866		CLAMP - Exhaust gas temperature (Radair)	1	24-4863, 24-4867 and up
-80	751 294		ADAPTER ASSEMBLY - Exhaust gas temperature (Radair)	1	24-4863, 24-4867 and up
-81	24955-00	C	PLACARD - Alternate air pull open	1	
-82	27178-00		PLACARD - Pitch out of trim (581 681)	1	24-4965 and up
-83	472 816		LIGHT ASSEMBLY - Trim warning (#800-1030-0333-504)	1	24-4965 and up
-84	757 938		CAP ASSEMBLY - (#800-0333-500)	1	24-4965 and up
-85	453 865		BUTTON - Plug (#SS51338)	1	24-4965 and up
-86	472 037		LAMP - (14 V., #330)	1	24-4965 and up
-87	406 704		NUT - Cap, dull black (#22-K1-82)	5	
	42034-00		STRAP - Ground	5	
	475 109		MOUNT - (#J-7219-22)	5	
	407 563		WASHER - (AN960-8)	10	
	404 910		NUT - (MS20365-832C)	5	
-88	52826-05		COVER - Instrument mounting	1	24-5019 and up

A - Used when Narco UAT-1 Transponder with UTC-1 Control Unit is installed.
B - Used on airplanes with serial numbers 24-4783, 24-4804 to 24-4862 inclusive, 24-4864 to 24-4866 inclusive.
C - Used when RaJay Turbocharger is installed.

When ordering, always specify Part Number, Description and Serial Number of Aircraft

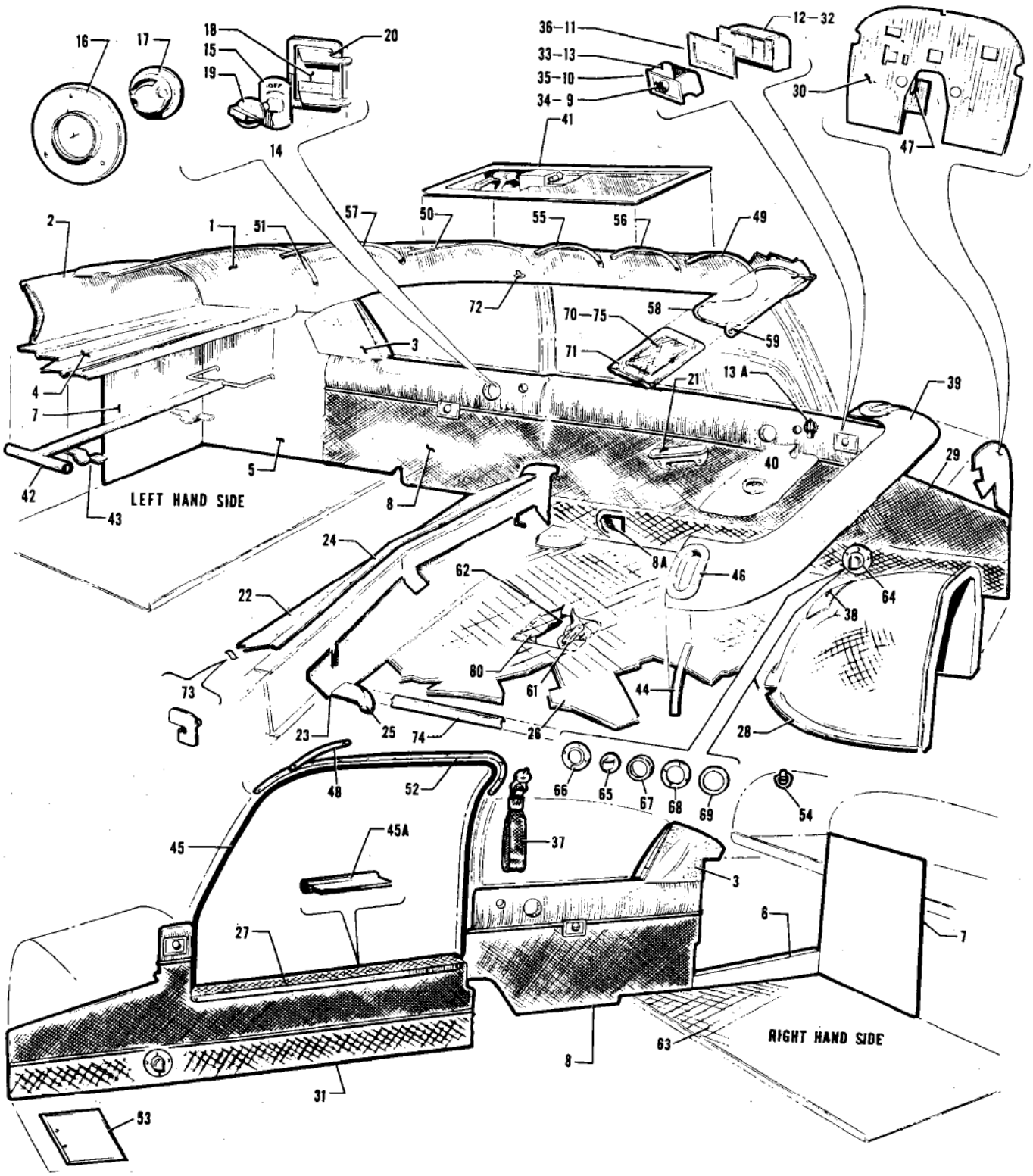

Figure 8. Cockpit Finishing Installation

Figure and Index Number	Part Number	Code	NOMENCLATURE	No. Req.	SERIAL NUMBERS AFFECTED
8-	20889	XY	DRAWING - Cockpit Finishing Installation		24-1 to 24-1476 inclusive
	21984	XY	DRAWING - Cockpit Finishing Installation		24-1477 to 24-2843 inclusive
	23032	XY	DRAWING - Cockpit Finishing Installation		24-2844 to 24-3557 inclusive
	24400	XY	DRAWING - Cockpit Finishing Installation		24-3558 and up
	24263	Z	DRAWING - Cockpit Finishing Installation		
	24890	V	DRAWING - Cockpit Finishing Installation		
-1	20733-00	XY	HEADLINING ASSEMBLY - Gray	1	24-1 to 24-336 inclusive
	20733-03	XY	HEADLINING ASSEMBLY - Gray	1	24-337 to 24-1476 inclusive
	20733-05	XY	HEADLINING ASSEMBLY - White	1	24-1477 to 24-2843 inclusive
	464 329	DXY	HEADLINING ASSEMBLY - Silver	1	24-2844 to 24-3557 inclusive
	464 330	DXY	HEADLINING ASSEMBLY - Brown	1	24-2844 to 24-3557 inclusive
	23298-10	XY	HEADLINING ASSEMBLY - Gray	1	24-3558 and up
	23298-11	XY	HEADLINING ASSEMBLY - Sand	1	24-3558 and up
	23298-10	Z	HEADLINING ASSEMBLY - Gray	1	26-2 to 26-70 inclusive
	23298-11	Z	HEADLINING ASSEMBLY - Sand	1	26-2 to 26-70 inclusive
	23298-29	Z	HEADLINING ASSEMBLY - Gray and white	1	26-71 and up
	23298-32	Z	HEADLINING ASSEMBLY - Sand and white	1	26-71 and up
	23298-23	V	HEADLINING ASSEMBLY - Sand	1	
-2	20594-00	XY	PANEL ASSEMBLY - Hat shelf, rear, gray	1	24-1 to 24-336 inclusive
	20594-04	XY	PANEL ASSEMBLY - Hat shelf, rear, gray	1	24-337 to 24-1476 inclusive
	20594-06	XY	PANEL ASSEMBLY - Hat shelf, rear, gray	1	24-1477 to 24-2843 inclusive
	480 024	DXY	PANEL ASSEMBLY - Hat shelf, rear, silver	1	24-2844 to 24-3557 inclusive
	480 025	DXY	PANEL ASSEMBLY - Hat shelf, rear, brown	1	24-2844 to 24-3557 inclusive
	23398-00		PANEL ASSEMBLY - Hat shelf, rear, gray	1	24-3558 and up, 26-2 and up
	23398-02		PANEL ASSEMBLY - Hat shelf, rear, sand	1	24-3558 and up, 26-2 and up
	24893-02	V	PANEL ASSEMBLY - Hat shelf, rear, beige	1	
-3	20543-00	XY	PLATE - Scuff, left	1	24-1 to 24-3557 inclusive
	20542-00	XY	PLATE - Scuff, right	1	24-1 to 24-3557 inclusive
-4	20526-00	BXY	SHELF ASSEMBLY - Hat	1	
	22123-00	CXY	SHELF ASSEMBLY - Hat	1	
	22123-03	VZ	SHELF ASSEMBLY - Hat	1	
-5	20575-00		PANEL - Baggage compartment, left	1	
-6	20537-00		PANEL - Baggage compartment, right	1	
-7	20660-05	X	PANEL - Baggage compartment, left rear	1	24-1 to 24-102 inclusive
	20660-06	X	PANEL - Baggage compartment, right rear	1	24-1 to 24-102 inclusive
	21639-18		PANEL - Baggage compartment, left rear	1	24-103 and up, 26-2 and up
	21639-19		PANEL - Baggage compartment, right rear	1	24-103 and up, 26-2 and up

A - Used on PA-24-180 and PA-24-250 with serial numbers 24-1 and up, PA-24-260 with serial numbers 24-3642, 24-4000 to 24-4246 inclusive, 24-4248 to 24-4299 inclusive, and PA-24-400 with serial numbers 26-2 and up.
B - Used on PA-24-180 and PA-24-250 with serial numbers 24-1 to 24-2174, 24-2176 to 24-2298.
C - Used on PA-24-180 and PA-24-250 with serial numbers 24-2175, 24-2299 and up.
D - If Palm Beach interior is installed, see Figure 8A.
V - Used on PA-24-260 airplanes only.
X - Used on PA-24-180 airplanes only.
Y - Used on PA-24-250 airplanes only.
Z - Used on PA-24-400 airplanes only.

Figure and Index Number	Part Number	Code	NOMENCLATURE	No. Req.	SERIAL NUMBERS AFFECTED
8-8	20630-03	XY	PANEL ASSEMBLY - Cockpit, left side, red	1	24-1 to 24-126 inclusive
	20630-04	XY	PANEL ASSEMBLY - Cockpit, left side, blue	1	24-1 to 24-126 inclusive
	20630-05	XY	PANEL ASSEMBLY - Cockpit, left side, brown	1	24-1 to 24-126 inclusive
	21734-02	XY	PANEL ASSEMBLY - Cockpit, left side, red	1	24-127 to 24-173 inclusive
	21734-14	XY	PANEL ASSEMBLY - Cockpit, left side, red	1	24-174 to 24-336 inclusive
	21734-18	XY	PANEL ASSEMBLY - Cockpit, left side, red	1	24-337 to 24-1251 inclusive
	21906-02	XY	PANEL ASSEMBLY - Cockpit, left side, red	1	24-1252 to 24-1476 inclusive
	21981-02	XY	PANEL ASSEMBLY - Cockpit, left side, red	1	24-1477 to 24-1977 inclusive
	22067-02	BXY	PANEL ASSEMBLY - Cockpit, left side, red	1	
	22067-19	XY	PANEL ASSEMBLY - Cockpit, left side, red	1	24-2202 to 24-2298 inclusive
	22411-02	XY	PANEL ASSEMBLY - Cockpit, left side, red, complete	1	24-2175, 24-2299 to 24-2843
	21734-03	XY	PANEL ASSEMBLY - Cockpit, left side, blue	1	24-127 to 24-173 inclusive
	21734-15	XY	PANEL ASSEMBLY - Cockpit, left side, blue	1	24-174 to 24-336 inclusive
	21734-19	XY	PANEL ASSEMBLY - Cockpit, left side, blue	1	24-337 to 24-1251 inclusive
	21906-03	XY	PANEL ASSEMBLY - Cockpit, left side, blue	1	24-1252 to 24-1476 inclusive
	21981-05	XY	PANEL ASSEMBLY - Cockpit, left side, blue	1	24-1477 to 24-1781 inclusive
	22067-05	XY	PANEL ASSEMBLY - Cockpit, left side, blue	1	24-1782 to 24-1977 inclusive
	22067-12	BXY	PANEL ASSEMBLY - Cockpit, left side, blue	1	
	22067-22	XY	PANEL ASSEMBLY - Cockpit, left side, blue	1	24-2202 to 24-2298 inclusive
	22411-03	XY	PANEL ASSEMBLY - Cockpit, left side, blue, complete	1	24-2175, 24-2299 to 24-2843
	21734-04	XY	PANEL ASSEMBLY - Cockpit, left side, brown	1	24-127 to 24-173 inclusive
	21734-06	XY	PANEL ASSEMBLY - Cockpit, left side, brown	1	24-174 to 24-336 inclusive
	21734-20	XY	PANEL ASSEMBLY - Cockpit, left side, brown	1	24-337 to 24-1251 inclusive
	21906-04	XY	PANEL ASSEMBLY - Cockpit, left side, brown	1	24-1252 to 24-1476 inclusive
	21981-03	XY	PANEL ASSEMBLY - Cockpit, left side, brown	1	24-1477 to 24-1977 inclusive
	22067-03	XY	PANEL ASSEMBLY - Cockpit, left side, brown	1	24-1978 to 24-2112 inclusive
	22067-10	XY	PANEL ASSEMBLY - Cockpit, left side, brown	1	24-2213 to 24-2174 inclusive, 24-2176 to 24-2201 inclusive
	22067-20	XY	PANEL ASSEMBLY - Cockpit, left side, brown	1	24-2202 to 24-2298 inclusive
	22411-04	XY	PANEL ASSEMBLY - Cockpit, left side, brown, complete	1	24-2175, 24-2299 to 24-2843
	21734-21	XY	PANEL ASSEMBLY - Cockpit, left side, green	1	24-337 to 24-1251 inclusive
	21906-05	XY	PANEL ASSEMBLY - Cockpit, left side, green	1	24-1252 to 24-1476 inclusive
	21981-04	XY	PANEL ASSEMBLY - Cockpit, left side, green	1	24-1477 to 24-1734, 24-1827
	22067-04	XY	PANEL ASSEMBLY - Cockpit, left side, green	1	24-1735 to 24-1826 inclusive, 24-1828 to 24-1977 inclusive
	22067-11	XY	PANEL ASSEMBLY - Cockpit, left side, green	1	24-1978 to 24-1274 inclusive, 24-2176 to 24-2201 inclusive
	22067-21	XY	PANEL ASSEMBLY - Cockpit, left side, green	1	24-2202 to 24-2298 inclusive
	22411-05	XY	PANEL ASSEMBLY - Cockpit, left side, green, complete	1	24-2175, 24-2299 to 24-2843

A - Used on PA-24-180 and PA-24-250 with serial numbers 24-1 and up, PA-24-260 with serial numbers 24-3642, 24-4000 to 24-4246 inclusive, 24-4248 to 24-4299 inclusive, and PA-24-400 with serial numbers 26-2 and up.
B - Used on airplanes with serial numbers 24-1978 to 24-2174, 24-2176 to 24-2201 inclusive.
X - Used on PA-24-180 airplanes only.
Y - Used on PA-24-250 airplanes only.

Figure and Index Number	Part Number	Code	NOMENCLATURE	No. Req.	SERIAL NUMBERS AFFECTED
8-8	23003-00	BDXY	PANEL ASSEMBLY - Cockpit, left side, rear	1	24-2844 to 24-3557 inclusive
	22993-00	BDXY	PANEL ASSEMBLY - Cockpit, left side, front	1	24-2844 to 24-3557 inclusive
	23276-17	CX	PANEL ASSEMBLY - Cockpit, left side, complete	1	24-3558 and up
	23276-22	XY	PANEL ASSEMBLY - Cockpit, left side, sand, complete	1	24-3558 and up
	23276-26	Z	PANEL ASSEMBLY - Cockpit, left side, sand, complete	1	
	23276-27	CZ	PANEL ASSEMBLY - Cockpit, left side, sand, complete	1	
	24880-00	EV	PANEL ASSEMBLY - Cockpit, left side, complete	1	
	20605-03	XY	PANEL ASSEMBLY - Cockpit, right side, rear, red	1	24-1 to 24-126 inclusive
	20605-04	XY	PANEL ASSEMBLY - Cockpit, right side, rear, blue	1	24-1 to 24-126 inclusive
	20605-05	XY	PANEL ASSEMBLY - Cockpit, right side, rear, brown	1	24-1 to 24-126 inclusive
	21736-02	XY	PANEL ASSEMBLY - Cockpit, right side, rear, red	1	24-127 to 24-336 inclusive
	21736-14	XY	PANEL ASSEMBLY - Cockpit, right side, rear, red	1	24-337 to 24-1476 inclusive
	21971-02	XY	PANEL ASSEMBLY - Cockpit, right side, rear, red	1	24-1477 to 24-2174 inclusive, 24-2176 to 24-2201 inclusive
	22069-02	XY	PANEL ASSEMBLY - Cockpit, right side, rear, red	1	24-2202 to 24-2298 inclusive
	22406-02	XY	PANEL ASSEMBLY - Cockpit, right side, rear, red	1	24-2175, 24-2299 to 24-2843
	21736-03	XY	PANEL ASSEMBLY - Cockpit, right side, rear, blue	1	24-127 to 24-336 inclusive
	21736-15	XY	PANEL ASSEMBLY - Cockpit, right side, rear, blue	1	24-337 to 24-1476 inclusive
	21971-05	XY	PANEL ASSEMBLY - Cockpit, right side, rear, blue	1	24-1477 to 24-1781 inclusive
	22069-05	XY	PANEL ASSEMBLY - Cockpit, right side, rear, blue	1	24-1782 to 24-2174 inclusive, 24-2176 to 24-2201 inclusive
	22069-18	XY	PANEL ASSEMBLY - Cockpit, right side, rear, blue	1	24-2202 to 24-2298 inclusive
	22406-03	XY	PANEL ASSEMBLY - Cockpit, right side, rear, blue	1	24-2175, 24-2299 to 24-2843
	21736-04	XY	PANEL ASSEMBLY - Cockpit, right side, rear, brown	1	24-127 to 24-336 inclusive
	21736-16	XY	PANEL ASSEMBLY - Cockpit, right side, rear, brown	1	24-337 to 24-1476 inclusive
	21971-03	XY	PANEL ASSEMBLY - Cockpit, right side, rear, brown	1	24-1477 to 24-2112 inclusive
	22069-03	XY	PANEL ASSEMBLY - Cockpit, right side, rear, brown	1	24-2113 to 24-2174 inclusive, 24-2176 to 24-2201 inclusive
	22069-16	XY	PANEL ASSEMBLY - Cockpit, right side, rear, brown	1	24-2202 to 24-2298 inclusive
	22406-04	XY	PANEL ASSEMBLY - Cockpit, right side, rear, brown	1	24-2175, 24-2299 to 24-2843
	21736-17	XY	PANEL ASSEMBLY - Cockpit, right side, rear, green	1	24-337 to 24-1476 inclusive
	21971-04	XY	PANEL ASSEMBLY - Cockpit, right side, rear, green	1	24-1477 to 24-1734, 24-1827
	22069-04	XY	PANEL ASSEMBLY - Cockpit, right side, rear, green	1	24-1735 to 24-1826 inclusive, 24-1828 to 24-1977 inclusive
	22069-17	FXY	PANEL ASSEMBLY - Cockpit, right side, rear, green	1	
	22406-05	XY	PANEL ASSEMBLY - Cockpit, right side, rear, green	1	24-2175, 24-2299 to 24-2843

A - Used on PA-24-180 and PA-24-250 with serial numbers 24-1 and up, PA-24-260 with serial numbers 24-3642, 24-4000 to 24-4246 inclusive, 24-4248 to 24-4299 inclusive, and PA-24-400 with serial numbers 26-2 and up.
B - When ordering, specify color tan or silver and airplane serial number.
C - When ordering, specify color red or blue and airplane serial number.
D - If Palm Beach Interior is installed, see Figure 8A.
E - When ordering, specify color red, blue or russet.
F - Used on airplanes with serial numbers 24-1978 to 24-2174, 24-2176 to 24-2298 inclusive.
V - Used on PA-24-260 airplanes only.
X - Used on PA-24-180 airplanes only.
Y - Used on PA-24-250 airplanes only.
Z - Used on PA-24-400 airplanes only.

Figure and Index Number	Part Number	Code	NOMENCLATURE	No. Req.	SERIAL NUMBERS AFFECTED
8-8	23021-02	CDXY	PANEL ASSEMBLY - Cockpit, right side, rear	1	24-2844 to 24-3557 inclusive
	23278-13	BXY	PANEL ASSEMBLY - Cockpit, right side, rear	1	24-3558 and up
	23278-17	XY	PANEL ASSEMBLY - Cockpit, right side, rear, sand	1	24-3558 and up
	23278-05	Z	PANEL ASSEMBLY - Cockpit, right side, rear, tan	1	
	23278-12	BZ	PANEL ASSEMBLY - Cockpit, right side, rear, tan	1	
	24845-00	EV	PANEL ASSEMBLY - Cockpit, right side, rear	1	
-8a	21890-00	XY	GRILL - Cabin heat duct	1	24-1252 to 24-2298 inclusive
	22289-00		OUTLET - Cabin heat	1	24-2299 and up, 26-2 and up
-9	18875-06		KNOB - Black	1	24-1 to 24-1476 inclusive
	471 075	XYZ	KNOB - Gray (#222)	1	24-1477 and up, 26-2 and up
	31489-00	V	KNOB - Chrome (571 068)	1	
-10	13950-00	XYZ	PLATE - Ash box cover	1	
	13950-02	V	PLATE - Ash box cover, chrome	1	
-11	18467-00		PLATE - Ash box back-up	1	
-12	484 385		RETAINER - Ash box (#947483)	1	
-13	453 141		ASH BOX - (#947478)	1	
-13a	23303-00		CLIP - Microphone (used with Telephonics mike RS-38A)	1	
	453 415		BRACKET - Microphone (used with Telex mike 66C)	1	
-14	754 203	XY	KIT - Ventilator box assembly, black (21160-00)	3	
-15	21257-00	XY	PLACARD - Ventilator control knob, black	1	24-1 to 24-1476 inclusive
	21257-02	XY	PLACARD - Ventilator control knob, gray	1	24-1477 to 24-2843 inclusive
	21257-03	CXY	PLACARD - Ventilator control knob, tan	1	24-2844 to 24-3557 inclusive
	21257-04	CXY	PLACARD - Ventilator control knob, dark brown	1	24-2844 and up
	21257-07	XY	PLACARD - Ventilator control knob, red	1	24-3558 and up
	21257-08	XY	PLACARD - Ventilator control knob, blue	1	24-3558 and up
-16	21156-00	XY	PLATE - Ventilator deflector	1	
-17	21154-00	XY	DEFLECTOR - Air, black	1	24-1 to 24-1476 inclusive
	21154-02	XY	DEFLECTOR - Air, gray	1	24-1477 to 24-2843 inclusive
	21154-03	CXY	DEFLECTOR - Air, dark brown	1	24-2844 and up
	21154-04	CXY	DEFLECTOR - Air, light charcoal	1	24-2844 and up
-18	21159-00	XY	DOOR ASSEMBLY - Ventilator	1	
-19	754 181	XY	KNOB - Vent box, black	1	24-1 to 24-1476 inclusive
	471 079	XY	KNOB - Vent box, gray	1	24-1477 to 24-2843 inclusive
	471 095	CXY	KNOB - Vent box, dark brown	1	24-2844 and up
	471 096	CXY	KNOB - Vent box, charcoal	1	24-2844 to 24-3557 inclusive
	23459-00	XY	KNOB - Vent box, red	1	24-3558 and up

A - Used on PA-24-180 and PA-24-250 with serial numbers 24-1 and up, PA-24-260 with serial numbers 24-3642, 24-4000 to 24-4246 inclusive, 24-4248 to 24-4299 inclusive, and PA-24-400 with serial numbers 26-2 and up.
B - When ordering, specify color red or blue and airplane serial number.
C - If Palm Beach Interior is installed, see Figure 8A.
D - When ordering, specify color tan or silver and airplane serial number.
E - When ordering, specify color red, blue or russet.
V - Used on PA-24-260 airplanes only.
X - Used on PA-24-180 airplanes only.
Y - Used on PA-24-250 airplanes only.
Z - Used on PA-24-400 airplanes only.

Figure and Index Number	Part Number	Code	NOMENCLATURE	No. Req.	SERIAL NUMBERS AFFECTED
8-20	21407-00	XY	SEAL - Vent box door	1	
-21	14260-19	XY	ARMREST ASSEMBLY - Black	1	24-1 to 24-126 inclusive
	14260-27	XY	ARMREST ASSEMBLY - Brown	1	24-1 to 24-126 inclusive
	14260-21	DXY	ARMREST ASSEMBLY - Red	1	24-127 to 24-1476 inclusive
	14260-23	DXY	ARMREST ASSEMBLY - Blue	1	24-127 to 24-1476 inclusive
	14260-25	DXY	ARMREST ASSEMBLY - Brown	1	24-127 to 24-1476 inclusive
	14260-37	XY	ARMREST ASSEMBLY - Green	3	24-337 to 24-1476 inclusive
	14260-47	CXY	ARMREST ASSEMBLY - Red	3	
	14260-48	CXY	ARMREST ASSEMBLY - Blue	3	
	14260-49	CXY	ARMREST ASSEMBLY - Brown	3	
	14260-50	CXY	ARMREST ASSEMBLY - Green	3	
	14260-55	XY	ARMREST ASSEMBLY - Red	3	24-2175, 24-2299 to 24-2843
	14260-56	XY	ARMREST ASSEMBLY - Blue	3	24-2175, 24-2299 to 24-2843
	22944-05	BXY	ARMREST ASSEMBLY - Tan	3	24-2844 to 24-3557 inclusive
	22944-04	BXY	ARMREST ASSEMBLY - Silver	3	24-2844 to 24-3557 inclusive
	23463-16	XYZ	ARMREST ASSEMBLY - Sand	3	24-3558 and up, 26-2 to 26-124
	23463-17	XYZ	ARMREST ASSEMBLY - Red	3	24-3558 and up, 26-2 to 26-124
	23463-18	XYZ	ARMREST ASSEMBLY - Blue	3	24-3558 and up, 26-2 to 26-124
	23463-16	Z	ARMREST ASSEMBLY - Sand, left front	1	26-125 and up
	23463-17	VZ	ARMREST ASSEMBLY - Red, left front	1	24-3642, 24-4000 and up, 26-125 and up
	23463-18	VZ	ARMREST ASSEMBLY - Blue, left front	1	24-3642, 24-4000 and up, 26-125 and up
	23463-24	V	ARMREST ASSEMBLY - Russet, left front	1	
	24953-00	VZ	ARMREST ASSEMBLY - Red, left rear	1	24-3642, 24-4000 and up, 26-125 and up
	24953-02	VZ	ARMREST ASSEMBLY - Blue, left rear	1	24-3642, 24-4000 and up, 26-125 and up
	24953-08	Z	ARMREST ASSEMBLY - Sand, left rear	1	26-125 and up
	24953-06	V	ARMREST ASSEMBLY - Russet, left rear	1	
	24953-01	VZ	ARMREST ASSEMBLY - Red, right rear	1	24-3642, 24-4000 and up, 26-125 and up
	24953-05	VZ	ARMREST ASSEMBLY - Blue, right rear	1	24-3642, 24-4000 and up, 26-125 and up
	24953-09	Z	ARMREST ASSEMBLY - Sand, right rear	1	26-125 and up
	24953-07	V	ARMREST ASSEMBLY - Russet, right rear	1	

A - Used on PA-24-180 and PA-24-250 with serial numbers 24-1 and up, PA-24-260 with serial numbers 24-3642, 24-4000 to 24-4246 inclusive, 24-4248 to 24-4299 inclusive, and PA-24-400 with serial numbers 26-2 and up.
B - If Palm Beach interior is installed, see Figure 8A.
C - Used on airplanes with serial numbers 24-1477 to 24-2174, 24-2176 to 24-2843 inclusive.
D - Three used on airplanes with serial numbers 24-337 to 24-1476 inclusive.
V - Used on PA-24-260 airplanes only.
X - Used on PA-24-180 airplanes only.
Y - Used on PA-24-250 airplanes only.
Z - Used on PA-24-400 airplanes only.

Figure and Index Number	Part Number	Code	NOMENCLATURE	No. Req.	SERIAL NUMBERS AFFECTED
8-22	21293-00	XY	SKIRT ASSEMBLY - Rear floor	1	
	23922-00	VZ	SKIRT ASSEMBLY - Rear floor	1	
-23	21292-00	D	PLATE ASSEMBLY - Front floor shield	1	
	22340-00	XY	PLATE ASSEMBLY - Front floor shield	1	24-2175, 24-2299 and up
	22340-03	VZ	PLATE ASSEMBLY - Front floorshield	1	
-24	21294-00	XY	STRIP ASSEMBLY - Floor skirt attachment	1	
-25	21007-00	XY	PLATE - Fuel line cover, left	1	
	21007-01	XY	PLATE - Fuel line cover, right	1	
-26	20811-00	XY	CARPET - Floor, dark gray	1	24-1 to 24-61 inclusive
	20811-02	XY	CARPET - Floor, dark gray	1	24-62 to 24-173 inclusive
	20811-03	XY	CARPET - Floor, dark gray	1	24-174 to 24-336 inclusive
	20811-04	XY	CARPET - Floor, dark gray	1	24-337 to 24-1251 inclusive
	20811-05	XY	CARPET - Floor, dark gray	1	24-1252 to 24-1476 inclusive
	21970-02	C	CARPET - Floor, red	1	
	22396-02	XY	CARPET - Floor, red	1	24-2175, 24-2299 to 24-2843
	21970-03	C	CARPET - Floor, blue	1	
	22396-03	XY	CARPET - Floor, blue	1	24-2175, 24-2299 to 24-2843
	21970-04	C	CARPET - Floor, brown	1	
	22396-04	XY	CARPET - Floor, brown	1	24-2175, 24-2299 to 24-2843
	21970-05	C	CARPET - Floor, green	1	
	22396-05	XY	CARPET - Floor, green	1	24-2175, 24-2299 to 24-2843
	23033-02	BX	CARPET - Floor, gray	1	24-2844 to 24-3557 inclusive
	23033-03	BX	CARPET - Floor, brown	1	24-2844 to 24-3557 inclusive
	23018-02	BY	CARPET - Floor, gray	1	24-2844 to 24-3557 inclusive
	23018-03	BY	CARPET - Floor, brown	1	24-2844 to 24-3557 inclusive
	23033-07	X	CARPET - Floor, red	1	24-3558 and up
	23033-08	X	CARPET - Floor, blue	1	24-3558 and up
	23033-09	X	CARPET - Floor, brown	1	24-3558 and up
	23018-19	Y	CARPET - Floor, red	1	24-3558 and up
	23018-20	Y	CARPET - Floor, blue	1	24-3558 and up
	23018-21	Y	CARPET - Floor, brown	1	24-3558 and up
	24420-02	VZ	CARPET - Floor, red	1	
	24420-03	VZ	CARPET - Floor, blue	1	
	24420-04	Z	CARPET - Floor, brown	1	
	24420-08	V	CARPET - Floor, rust	1	
-27	20512-00	XY	SILL - Door	1	24-1 to 24-1476 inclusive
	21908-00	XY	SILL - Door	1	24-1477 to 24-2843 inclusive
	20512-00		SILL - Door	1	24-2844 and up, 26-2 and up

A - Used on PA-24-180 and PA-24-250 with serial numbers 24-1 and up, PA-24-260 with serial numbers 24-3642, 24-4000 to 24-4246 inclusive, 24-4248 to 24-4299 inclusive, and PA-24-400 with serial numbers 26-2 and up.
B - If Palm Beach Interior is installed, see Figure 8A.
C - Used on PA-24-180 and PA-24-250 with serial numbers 24-1477 to 24-2174 inclusive, 24-2176 to 24-2298 inclusive.
D - Used on PA-24-180 and PA-24-250 with serial numbers 24-1 to 24-2174, 24-2176 to 24-2298 inclusive.
V - Used on PA-24-260 airplanes only.
X - Used on PA-24-180 airplanes only.
Y - Used on PA-24-250 airplanes only.
Z - Used on PA-24-400 airplanes only.

Figure and Index Number	Part Number	Code	NOMENCLATURE	No. Req.	SERIAL NUMBERS AFFECTED
8-28	21303-00	XY	CARPET - Nose wheel cover, dark gray	1	24-1 to 24-173 inclusive
	21303-04	XY	CARPET - Nose wheel cover, dark gray	1	24-174 to 24-336 inclusive
	21303-07	XY	CARPET - Nose wheel cover, dark gray	1	24-337 to 24-1251 inclusive
	21303-10	XY	CARPET - Nose wheel cover, dark gray	1	24-1252 to 24-1476 inclusive
	21303-15	D	CARPET - Nose wheel cover, red	1	
	21303-14	D	CARPET - Nose wheel cover, blue	1	
	21303-13	D	CARPET - Nose wheel cover, brown	1	
	21303-16	D	CARPET - Nose wheel cover, green	1	
	21303-25	XY	CARPET - Nose wheel cover, red	1	24-2175, 24-2299 to 24-2843
	21303-26	XY	CARPET - Nose wheel cover, blue	1	24-2175, 24-2299 to 24-2843
	21303-27	XY	CARPET - Nose wheel cover, brown	1	24-2175, 24-2299 to 24-2843
	21303-28	XY	CARPET - Nose wheel cover, green	1	24-2175, 24-2299 to 24-2843
	23037-02	B	CARPET - Nose wheel cover, gray	1	24-2844 to 24-3557 inclusive
	23037-03	B	CARPET - Nose wheel cover, tan	1	24-2844 to 24-3557 inclusive
	23037-23		CARPET - Nose wheel cover, red	1	24-3558 and up, 26-2 and up
	23037-24		CARPET - Nose wheel cover, blue	1	24-3558 and up, 26-2 and up
	23037-25	XYZ	CARPET - Nose wheel cover, brown	1	24-3558 and up, 26-2 and up
	23037-26	V	CARPET - Nose wheel cover, rust	1	
-29	20609-00	XY	PANEL ASSEMBLY - Front cockpit, left, black	1	24-1 to 24-126 inclusive
	20609-05	XY	PANEL ASSEMBLY - Front cockpit, left, brown	1	24-1 to 24-126 inclusive
	20609-07	XY	PANEL ASSEMBLY - Front cockpit, left, red	1	24-127 to 24-173 inclusive
	20609-12	XY	PANEL ASSEMBLY - Front cockpit, left, red	1	24-174 to 24-336 inclusive
	20609-16	XY	PANEL ASSEMBLY - Front cockpit, left, red	1	24-337 to 24-1251 inclusive
	21888-04	XY	PANEL ASSEMBLY - Front cockpit, left, red	1	24-1252 to 24-1476 inclusive
	21888-13	DXY	PANEL ASSEMBLY - Front cockpit, left, red	1	
	20609-09	XY	PANEL ASSEMBLY - Front cockpit, left, blue	1	24-127 to 24-173 inclusive
	20609-13	XY	PANEL ASSEMBLY - Front cockpit, left, blue	1	24-174 to 24-336 inclusive
	20609-17	XY	PANEL ASSEMBLY - Front cockpit, left, blue	1	24-337 to 24-1251 inclusive
	21888-05	XY	PANEL ASSEMBLY - Front cockpit, left, blue	1	24-1252 to 24-1476 inclusive
	21888-16	CXY	PANEL ASSEMBLY - Front cockpit, left, blue	1	
	21888-27	XY	PANEL ASSEMBLY - Front cockpit, left, blue	1	24-2202 to 24-2298 inclusive
	20609-05	XY	PANEL ASSEMBLY - Front cockpit, left, brown	1	24-127 to 24-173 inclusive
	20609-11	XY	PANEL ASSEMBLY - Front cockpit, left, brown	1	24-174 to 24-336 inclusive
	20609-18	XY	PANEL ASSEMBLY - Front cockpit, left, brown	1	24-337 to 24-1251 inclusive
	21888-06	XY	PANEL ASSEMBLY - Front cockpit, left, brown	1	24-1252 to 24-1476 inclusive
	21888-14	CXY	PANEL ASSEMBLY - Front cockpit, left, brown	1	
	21888-25	XY	PANEL ASSEMBLY - Front cockpit, left, brown	1	24-2202 to 24-2298 inclusive
	20609-19	XY	PANEL ASSEMBLY - Front cockpit, left, green	1	24-337 to 24-1251 inclusive
	21888-07	XY	PANEL ASSEMBLY - Front cockpit, left, green	1	24-1252 to 24-1476 inclusive
	21888-15	CXY	PANEL ASSEMBLY - Front cockpit, left, green	1	
	21888-26	XY	PANEL ASSEMBLY - Front cockpit, left, green	1	24-2202 to 24-2298 inclusive

A - Used on PA-24-180 and PA-24-250 with serial numbers 24-1 and up, PA-24-260 with serial numbers 24-3642, 24-4000 to 24-4246 inclusive, 24-4248 to 24-4299 inclusive, and PA-24-400 with serial numbers 26-2 and up.
B - If Palm Beach Interior is installed, see Figure 8A.
C - Used on airplanes with serial numbers 24-1477 to 24-2174, 24-2176 to 24-2201 inclusive.
D - Used on PA-24-180 and PA-24-250 with serial numbers 24-1477 to 24-2174, 24-2176 to 24-2298 inclusive.
V - Used on PA-24-260 airplanes only.
X - Used on PA-24-180 airplanes only.
Y - Used on PA-24-250 airplanes only.
Z - Used on PA-24-400 airplanes only.

Figure and Index Number	Part Number	Code	NOMENCLATURE	No. Req.	SERIAL NUMBERS AFFECTED
8-30	20895-00	XY	BLANKET - Firewall, black	1	24-1 to 24-126 inclusive
	21739-02	XY	BLANKET - Firewall, black	1	24-127 to 24-1251 inclusive
	21937-02	XY	BLANKET - Firewall, black	1	24-1252 to 24-1476 inclusive
	22118-02	DXY	BLANKET - Firewall, black	1	
	22413-10		BLANKET ASSEMBLY - Firewall, black, top, center	1	24-2175, 24-2299 and up, 26-2 and up
	22413-11		BLANKET ASSEMBLY - Firewall, black, top, left	1	24-2175, 24-2299 and up, 26-2 and up
	22413-12	XY	BLANKET ASSEMBLY - Firewall, black, side, left	1	24-2175, 24-2299 and up
	24897-07	Z	BLANKET ASSEMBLY - Firewall, black, side, left	1	
	24898-07	V	BLANKET ASSEMBLY - Firewall, black, side, left	1	
	22413-13	XY	BLANKET ASSEMBLY - Firewall, black, side, right	1	24-2175, 24-2299 and up
	24897-06	Z	BLANKET ASSEMBLY - Firewall, black, side, right	1	
	24898-06	V	BLANKET ASSEMBLY - Firewall, black, side, right	1	
-31	20641-03	XY	PANEL ASSEMBLY - Cockpit, right front, red	1	24-1 to 24-126 inclusive
	20641-04	XY	PANEL ASSEMBLY - Cockpit, right front, blue	1	24-1 to 24-126 inclusive
	20641-05	XY	PANEL ASSEMBLY - Cockpit, right front, brown	1	24-1 to 24-126 inclusive
	21733-02	XY	PANEL ASSEMBLY - Cockpit, right front, red	1	24-127 to 24-173 inclusive
	21733-14	XY	PANEL ASSEMBLY - Cockpit, right front, red	1	24-174 to 24-336 inclusive
	21733-18	XY	PANEL ASSEMBLY - Cockpit, right front, red	1	24-337 to 24-1251 inclusive
	21910-02	XY	PANEL ASSEMBLY - Cockpit, right front, red	1	24-1252 to 24-1476 inclusive
	21967-02	BXY	PANEL ASSEMBLY - Cockpit, right front, red	1	
	21967-22	XY	PANEL ASSEMBLY - Cockpit, right front, red	1	24-2202 to 24-2298 inclusive
	22422-02	XY	PANEL ASSEMBLY - Cockpit, right front, red	1	24-2175, 24-2299 to 24-2843
	21733-03	XY	PANEL ASSEMBLY - Cockpit, right front, blue	1	24-127 to 24-173 inclusive
	21733-15	XY	PANEL ASSEMBLY - Cockpit, right front, blue	1	24-174 to 24-336 inclusive
	21733-19	XY	PANEL ASSEMBLY - Cockpit, right front, blue	1	24-337 to 24-1251 inclusive
	21910-03	XY	PANEL ASSEMBLY - Cockpit, right front, blue	1	24-1252 to 24-1476 inclusive
	21967-05	XY	PANEL ASSEMBLY - Cockpit, right front, blue	1	24-1477 to 24-1781 inclusive
	21967-17	CXY	PANEL ASSEMBLY - Cockpit, right front, blue	1	
	21967-25	XY	PANEL ASSEMBLY - Cockpit, right front, blue	1	24-2202 to 24-2298 inclusive
	22422-03	XY	PANEL ASSEMBLY - Cockpit, right front, blue	1	24-2175, 24-2299 to 24-2843

A - Used on PA-24-180 and PA-24-250 with serial numbers 24-1 and up, PA-24-260 with serial numbers 24-3642, 24-4000 to 24-4246 inclusive, 24-4248 to 24-4299 inclusive, and PA-24-400 with serial numbers 26-2 and up.
B - Used on airplanes with serial numbers 24-1477 to 24-2174, 24-2176 to 24-2201 inclusive.
C - Used on airplanes with serial numbers 24-1782 to 24-2174, 24-2176 to 24-2201 inclusive.
D - Used on PA-24-180 and PA-24-250 with serial numbers 24-1477 to 24-2174, 24-2176 to 24-2298 inclusive.
V - Used on PA-24-260 airplanes only.
X - Used on PA-24-180 airplanes only.
Y - Used on PA-24-250 airplanes only.
Z - Used on PA-24-400 airplanes only.

Figure and Index Number	Part Number	Code	NOMENCLATURE	No. Req.	SERIAL NUMBERS AFFECTED
8-31	21733-04	XY	PANEL ASSEMBLY - Cockpit, right front, brown	1	24-127 to 24-173 inclusive
	21733-16	XY	PANEL ASSEMBLY - Cockpit, right front, brown	1	24-174 to 24-336 inclusive
	21733-20	XY	PANEL ASSEMBLY - Cockpit, right front, brown	1	24-337 to 24-1251 inclusive
	21910-05	XY	PANEL ASSEMBLY - Cockpit, right front, brown	1	24-1252 to 24-1476 inclusive
	21967-03	XY	PANEL ASSEMBLY - Cockpit, right front, brown	1	24-1477 to 24-2122 inclusive
	21967-15	XY	PANEL ASSEMBLY - Cockpit, right front, brown	1	24-2133 to 24-2174 inclusive, 24-2176 to 24-2201 inclusive
	21967-23	XY	PANEL ASSEMBLY - Cockpit, right front, brown	1	24-2202 to 24-2298 inclusive
	22422-04	XY	PANEL ASSEMBLY - Cockpit, right front, brown	1	24-2175, 24-2299 to 24-2843
	21733-21	XY	PANEL ASSEMBLY - Cockpit, right front, green	1	24-337 to 24-1251 inclusive
	21910-05	XY	PANEL ASSEMBLY - Cockpit, right front, green	1	24-1252 to 24-1476 inclusive
	21967-04	XY	PANEL ASSEMBLY - Cockpit, right front, green	1	24-1477 to 24-1734, 24-1827
	21967-24	BXY	PANEL ASSEMBLY - Cockpit, right front, green	1	
	22422-05	XY	PANEL ASSEMBLY - Cockpit, right front, green	1	24-2175, 24-2299 to 24-2843
	23044-00	CDXY	PANEL ASSEMBLY - Cockpit, right front	1	24-2844 to 24-3557 inclusive
	23277-13	FXY	PANEL ASSEMBLY - Cockpit, right front	1	24-3558 and up
	23277-20	XY	PANEL ASSEMBLY - Cockpit, right front, sand	1	24-3558 and up
	23277-21	Z	PANEL ASSEMBLY - Cockpit, right front, sand	1	
	23277-22	FZ	PANEL ASSEMBLY - Cockpit, right front	1	
	24867-00	EV	PANEL ASSEMBLY - Cockpit, right front	1	
-31a	21890-00	XY	GRILL - Cabin heat duct	1	24-1252 to 24-2298 inclusive
	22289-00		OUTLET - Cabin heat	1	24-2299 and up, 26-2 and up
-32	484 385		RETAINER - Ash box (#947483)	1	
-33	453 141		BOX - Ash (#947478)	1	
-34	18875-06	XY	KNOB - Black	1	24-1 to 24-1476 inclusive
	471 075	XYZ	KNOB - Gray (#222)	1	24-1477 and up, 26-2 and up
	31489-00	V	KNOB - Chrome (571 068)	1	
-35	13950-00	XYZ	PLATE - Ash box cover	1	
	13950-02	V	PLATE - Ash box cover, chrome	1	
-36	18467-00		PLATE - Ash box back-up	1	

A - Used on PA-24-180 and PA-24-250 with serial numbers 24-1 and up, PA-24-260 with serial numbers 24-3642, 24-4000 to 24-4246 inclusive, 24-4248 to 24-4299 inclusive, and PA-24-400 with serial numbers 26-2 and up.
B - Used on airplanes with serial numbers 24-1735 to 24-1826, 24-1828 to 24-2174, 24-2176 to 24-2298 inclusive.
C - When ordering, specify color tan or silver and airplanes serial number.
D - If Palm Beach Interior is installed, see Figure 8A.
E - When ordering, specify color red, blue or russet and airplane serial number.
F - When ordering, specify color red or blue and airplane serial number.
V - Used on PA-24-260 airplanes only.
X - Used on PA-24-180 airplanes only.
Y - Used on PA-24-250 airplanes only.
Z - Used on PA-24-400 airplanes only.



Figure and Index Number	Part Number	Code	NOMENCLATURE	No. Req.	SERIAL NUMBERS AFFECTED
8-37	17965-04	XY	LOOP ASSEMBLY - Assist, black	2	24-103 to 24-1476 inclusive
	17965-05	XY	LOOP ASSEMBLY - Assist, gray	2	24-1477 to 24-2843 inclusive
	19927-05	BXY	LOOP ASSEMBLY - Assist, silver	2	24-2844 to 24-3557 inclusive
	19927-06	BXY	LOOP ASSEMBLY - Assist, tan	2	24-2844 to 24-3557 inclusive
	19927-02	XYZ	LOOP ASSEMBLY - Assist, charcoal	1	
	19927-03	XYZ	LOOP ASSEMBLY - Assist, dark brown	1	
	19927-07	V	LOOP ASSEMBLY - Assist, beige	1	
-38	21278-00	XY	PLACARD - Check list	1	
-39	20894-00	XY	COVER - Cowl, black	1	24-1 to 24-1476 inclusive
	22454-00		COVER - Cowl, black	1	24-1477 and up, 26-2 and up
-40	20689-00	XY	PANEL ASSEMBLY - Instrument access, black	1	24-1 to 24-1476 inclusive
	22010-00	XY	PANEL ASSEMBLY - Instrument access, black	1	24-1477 to 24-1481 inclusive
	22010-04	XY	PANEL ASSEMBLY - Instrument access, black	1	24-1482 to 24-1977 inclusive
	20689-04	XY	PANEL ASSEMBLY - Instrument access, black	1	24-1978 to 24-2174 inclusive 24-2176 to 24-2298 inclusive
	22452-00	VXY	PANEL ASSEMBLY - Instrument access, black	1	24-2175, 24-2299 and up
	22452-03	Z	PANEL ASSEMBLY - Instrument access, black	1	
-41	21309-02	XY	PANEL - Cabin light	1	24-1 to 24-1476 inclusive
	21309-03	XY	PANEL - Cabin light	1	24-1477 to 24-2843 inclusive
	21309-04	BXY	PANEL - Cabin light, gray	1	24-2844 to 24-3557 inclusive
	21309-05	BXY	PANEL - Cabin light, dark brown	1	24-2844 to 24-3557 inclusive
	21309-06	XY	PANEL - Cabin light, white	1	24-3558 and up
	24705-00	Z	PANEL - Cabin light, white	1	
	24705-02	V	PANEL - Cabin light, white	1	
-42	18994-00		BAR ASSEMBLY - Tow	1	
-43	14476-05		STRAP ASSEMBLY - Tow bar	2	
	454 982		CLIP - Tow bar	2	
-44	21373-00		STRIP - Cowl cover attachment, left	1	
	21373-01		STRIP - Cowl cover attachment, right	1	
-45	187 511	XY	STRIP - Weather, top and sides, black	9'	
	23256-02	BXY	STRIP - Weather, top and sides, silver	1	24-2844 to 24-3557 inclusive
	23256-03	BXY	STRIP - Weather, top and sides, tan	1	24-2844 to 24-3557 inclusive
	23305-31	XY	STRIP - Weather, top and sides, tan (leather)	1	24-3558 to 24-3604 inclusive
	23305-35	XY	STRIP - Weather, top and sides, red (leather)	1	24-3558 to 24-3604 inclusive
	23305-37	XY	STRIP - Weather, top and sides, blue (leather)	1	24-3558 to 24-3604 inclusive
	23305-18	XYZ	STRIP - Weather, top and sides, tan (cloth)	1	24-3605 and up, 26-2 to 26-124
	25156-04	Z	STRIP - Weather, top and sides, tan (vinyl)	1	26-125 and up
	23305-43	XYZ	STRIP - Weather, top and sides, red (vinyl)	1	24-3605 and up, 26-2 and up
	23305-45	XYZ	STRIP - Weather, top and sides, blue (vinyl)	1	24-3605 and up, 26-2 and up
	23305-52	V	STRIP - Weather, top and sides, white (vinyl)	1	

A - Used on PA-24-180 and PA-24-250 with serial numbers 24-1 and up, PA-24-260 with serial numbers 24-3642, 24-4000 to 24-4246 inclusive, 24-4248 to 24-4299 inclusive, and PA-24-400 with serial numbers 26-2 and up.
B - If Palm Beach Interior is installed, see Figure 8A.
V - Used on PA-24-260 airplanes only.
X - Used on PA-24-180 airplanes only.
Y - Used on PA-24-250 airplanes only.
Z - Used on PA-24-400 airplanes only.

Figure and Index Number	Part Number	Code	NOMENCLATURE	No. Req.	SERIAL NUMBERS AFFECTED
8-45a	23305-30	XY	STRIP - Weather, door, bottom, tan (leather)	1	24-3558 to 24-3604 inclusive
	23305-34	XY	STRIP - Weather, door, bottom, red (leather)	1	24-3558 to 24-3604 inclusive
	23305-36	XY	STRIP - Weather, door, bottom, blue (leather)	1	24-3558 to 24-3604 inclusive
	23305-11	XYZ	STRIP - Weather, door, bottom, tan (cloth)	1	24-3605 and up, 26-2 to 26-124
	25156-02	Z	STRIP - Weather, door, bottom, tan (vinyl)	1	26-125 and up
	23305-42		STRIP - Weather, door, bottom, red (vinyl)	1	24-3605 and up, 26-2 and up
	23305-44		STRIP - Weather, door, bottom, blue (vinyl)	1	24-3605 and up, 26-2 and up
	23305-54	V	STRIP - Weather, door, bottom, russet (vinyl)	1	
-46	21336-00		PLATE - Handhold	2	
-47	20523-00	XY	PLATE - Cable guard	1	24-1 to 24-1251 inclusive
	20523-02	XY	PLATE - Cable guard	1	24-1252 to 24-1476 inclusive
	20523-00		PLATE - Cable guard	1	24-1477 and up
-48	20664-00	XY	TRIM STRIP - Headlining, right, Sta. 80, chrome	1	24-1 to 24-1476 inclusive
	20664-05	XY	TRIM STRIP - Headlining, right, Sta. 80, gray	1	24-1477 to 24-3557 inclusive
-49	20665-00	XY	TRIM STRIP - Headlining, left, Sta. 80, chrome	1	24-1 to 24-1476 inclusive
	20665-02	XY	TRIM STRIP - Headlining, left, Sta. 80, gray	1	24-1477 to 24-3557 inclusive
-50	20662-00	XY	TRIM STRIP - Headlining, Sta. 105, chrome	1	24-1 to 24-1476 inclusive
	20664-03	XY	TRIM STRIP - Headlining, Sta. 105, left, chrome	1	24-1 to 24-1476 inclusive
	20664-02	XY	TRIM STRIP - Headlining, Sta. 105, right, chrome	1	24-1 to 24-1476 inclusive
	20664-07	XY	TRIM STRIP - Headlining, Sta. 105, left, gray	1	24-1477 to 24-2732 inclusive
	20664-09	XY	TRIM STRIP - Headlining, Sta. 105, left, gray	1	24-2733 to 24-3557 inclusive
	20664-06	XY	TRIM STRIP - Headlining, Sta. 105, right, gray	1	24-1477 to 24-3557 inclusive
-51	20663-00	XY	TRIM STRIP - Headlining, Sta. 136, chrome	1	24-1 to 24-1476 inclusive
	20663-12	XY	TRIM STRIP - Headlining, Sta. 136, gray	1	24-1477 to 24-3557 inclusive
-52	20556-00	CXY	TRIM STRIP - Door	1	24-1 to 24-3557 inclusive
	23269-03	E	TRIM STRIP - Door	1	24-3558 and up, 26-2 and up
	23269-05	V	TRIM STRIP - Door	1	
-53	21525-00	DXY	PLATE - Heel, left	1	
	21525-02	B	PLATE - Heel, left	1	
	21525-01	DXY	PLATE - Heel, right	1	
	21525-03	B	PLATE - Heel, right	1	
-54	487 629		HANGER - Coat	2	
-55	20664-03	XY	TRIM STRIP - Headlining, Sta. 96, left, chrome	1	24-1 to 24-1476 inclusive
	20664-07	XY	TRIM STRIP - Headlining, Sta. 96, left, gray	1	24-1477 to 24-3557 inclusive
-56	20664-04	XY	TRIM STRIP - Headlining, Sta. 87, chrome	1	24-1 to 24-1476 inclusive
	20664-08	XY	TRIM STRIP - Headlining, Sta. 87, gray	1	24-1477 to 24-3557 inclusive
-57	20663-02	XY	TRIM STRIP - Headlining, Sta. 120, chrome	1	24-1 to 24-1476 inclusive
	20663-13	XY	TRIM STRIP - Headlining, Sta. 120, gray	1	24-1477 to 24-3557 inclusive

A - Used on PA-24-180 and PA-24-250 with serial numbers 24-1 and up, PA-24-260 with serial numbers 24-3642, 24-4000 to 24-4246 inclusive, 24-4248 to 24-4299 inclusive, and PA-24-400 with serial numbers 26-2 and up.
B - Used on PA-24-180 and PA-24-250 with serial numbers 24-2175, 24-2299 and up, PA-24-400 and PA-24-260.
C - If Palm Beach Interior is installed, see Figure 8A.
D - Used on airplanes with serial numbers 24-1 to 24-2174 inclusive, 24-2176 to 24-2298 inclusive.
E - When ordering, specify color gray or sand.
V - Used on PA-24-260 airplanes only.
X - Used on PA-24-180 airplanes only.
Y - Used on PA-24-250 airplanes only.
Z - Used on PA-24-400 airplanes only.

Figure and Index Number	Part Number	Code	NOMENCLATURE	No. Req.	SERIAL NUMBERS AFFECTED
8-58	21825-00	XY	VISOR ASSEMBLY - Sun gray (with handhold)	2	
	21952-08	XY	VISOR ASSEMBLY - White (with handhold)	2	
	22046-02	XY	VISOR ASSEMBLY - White (without handhold)	2	
	23040-02	CXY	VISOR ASSEMBLY - Silver	2	24-2844 to 24-3557 inclusive
	23040-03	CXY	VISOR ASSEMBLY - Tan	2	24-2844 to 24-3557 inclusive
	23040-08		VISOR ASSEMBLY - Gray	2	24-3558 and up, 26-2 and up
	23040-09		VISOR ASSEMBLY - Sand	2	24-3558 and up, 26-2 and up
	23040-11	V	VISOR ASSEMBLY - Beige	2	
-59	21824-00		SUPPORT - Sun visor	4	
-60	22364-02	Y	CARPET - Fuel strainer access door, red	1	24-2175, 24-2299 to 24-2843
	22364-03	Y	CARPET - Fuel strainer access door, blue	1	24-2175, 24-2299 to 24-2843
	22364-04	Y	CARPET - Fuel strainer access door, green	1	24-2175, 24-2299 to 24-2843
	22364-05	Y	CARPET - Fuel strainer access door, brown	1	24-2175, 24-2299 to 24-2843
	23035-02	CXY	CARPET - Fuel strainer access door, gray	1	24-2844 to 24-3557 inclusive
	23035-03	CXY	CARPET - Fuel strainer access door, brown	1	24-2844 to 24-3557 inclusive
	23035-15		CARPET - Fuel strainer access door, red	1	24-3558 and up, 26-2 and up
	23035-16		CARPET - Fuel strainer access door, blue	1	24-3558 and up, 26-2 and up
	23035-17	XYZ	CARPET - Fuel strainer access door, brown	1	24-3558 and up, 26-2 and up
	24843-02	V	CARPET - Fuel strainer access door, rust	1	
-61	22177-00	VXY	PLACARD - Fuel strainer access door	1	
	24490-00	Z	PLACARD - Fuel drain access door	1	
-62	22284-00	B	DOOR ASSEMBLY - Fuel strainer access (without carpet)	1	
-63	23569-00	XY	CARPET - Baggage compartment, gray	1	24-3285 and up
	23569-00	Z	CARPET - Baggage compartment, gray	1	26-2 to 26-124 inclusive
	23569-02	VZ	CARPET - Baggage compartment, gray	1	24-3642, 24-4000 and up, 26-125 and up
-64	24753-02	Z	PLATE ASSEMBLY - Cabin air outlet, brown	2	
	24753-03	Z	PLATE ASSEMBLY - Cabin air outlet, charcoal	2	
	24753-04	V	PLATE ASSEMBLY - Cabin air outlet, sand	2	
-65	24738-02	Z	PLATE - Cabin air outlet, brown	1	
	24738-03	Z	PLATE - Cabin air outlet, charcoal	1	
	24738-04	V	PLATE - Cabin air outlet, sand	1	
-66	24741-02	Z	COVER - Cabin air outlet plate, brown	1	
	24741-03	Z	COVER - Cabin air outlet plate, charcoal	1	
	24741-04	V	COVER - Cabin air outlet plate, sand	1	
-67	24739-00	VZ	BAFFLE - Cabin air outlet	1	
-68	24740-00	VZ	WASHER - Cabin air outlet	2	
-69	19513-89	VZ	WASHER - Cabin air outlet	2	

A - Used on PA-24-180 and PA-24-250 with serial numbers 24-1 and up, PA-24-260 with serial numbers 24-3642, 24-4000 to 24-4246 inclusive, 24-4248 to 24-4299 inclusive, and PA-24-400 with serial numbers 26-2 and up.
B - Used on PA-24-180 and PA-24-250 with serial numbers 24-2175, 24-2299 and up, PA-24-400 and PA-24-260.
C - If Palm Beach Interior is installed, see Figure 8A.
V - Used on PA-24-260 airplanes only.
X - Used on PA-24-180 airplanes only.
Y - Used on PA-24-250 airplanes only.
Z - Used on PA-24-400 airplanes only.

Figure and Index Number	Part Number	Code	NOMENCLATURE	No. Req.	SERIAL NUMBERS AFFECTED
8-70	25119-00	BZ	PLACARD - Engine starting instructions, left visor	1	
	25335-00	CZ	PLACARD - Engine starting instructions, left visor	1	
	24994-00	VY	PLACARD - Check list, right visor	1	
	24984-00	VZ	PLACARD - Check list, right visor	1	
	27241-00	D	PLACARD - Check list, right visor	1	
-71	24935-00	VZ	SLEEVE ASSEMBLY - Sun visor placard	2	
-72	565 446		HANGER - Coat (#XP-96208)	1	
-73	24967-00	VZ	COVER ASSEMBLY - Spar fittings, left, red	1	
	24967-05	VZ	COVER ASSEMBLY - Spar fittings, left, blue	1	
	24967-18	Z	COVER ASSEMBLY - Spar fittings, left, sand	1	
	24967-10	V	COVER ASSEMBLY - Spar fittings, left, russet	1	
	24967-01	VZ	COVER ASSEMBLY - Spar fittings, right, red	1	
	24967-08	VZ	COVER ASSEMBLY - Spar fittings, right, blue	1	
	24967-19	Z	COVER ASSEMBLY - Spar fittings, right, sand	1	
	24967-13	V	COVER ASSEMBLY - Spar fittings, right, russet	1	
-74	24173-00	VZ	STRIP - Side panel retaining	1	
-75	25296-00	V	PLACARD - Alternate static source instruction	1	
	25297-00	Z	PLACARD - Alternate static source instruction	1	

A - Used on PA-24-180 and PA-24-250 with serial numbers 24-1 and up, PA-24-260 with serial numbers 24-3642, 24-4000 to 24-4246 inclusive, 24-4248 to 24-4299 inclusive, and PA-24-400 with serial numbers 26-2 and up.
B - Used if Kit 756 922 has not been installed per Service Letter #451.
C - Used if Kit 756 922 has been installed per Service Letter #451.
D - Used on PA-24-260 fuel injected models when Heated Alternate Air Induction Kit is installed.
V - Used on PA-24-260 airplanes only.
Y - Used on PA-24-250 airplanes only.
Z - Used on PA-24-400 airplanes only.

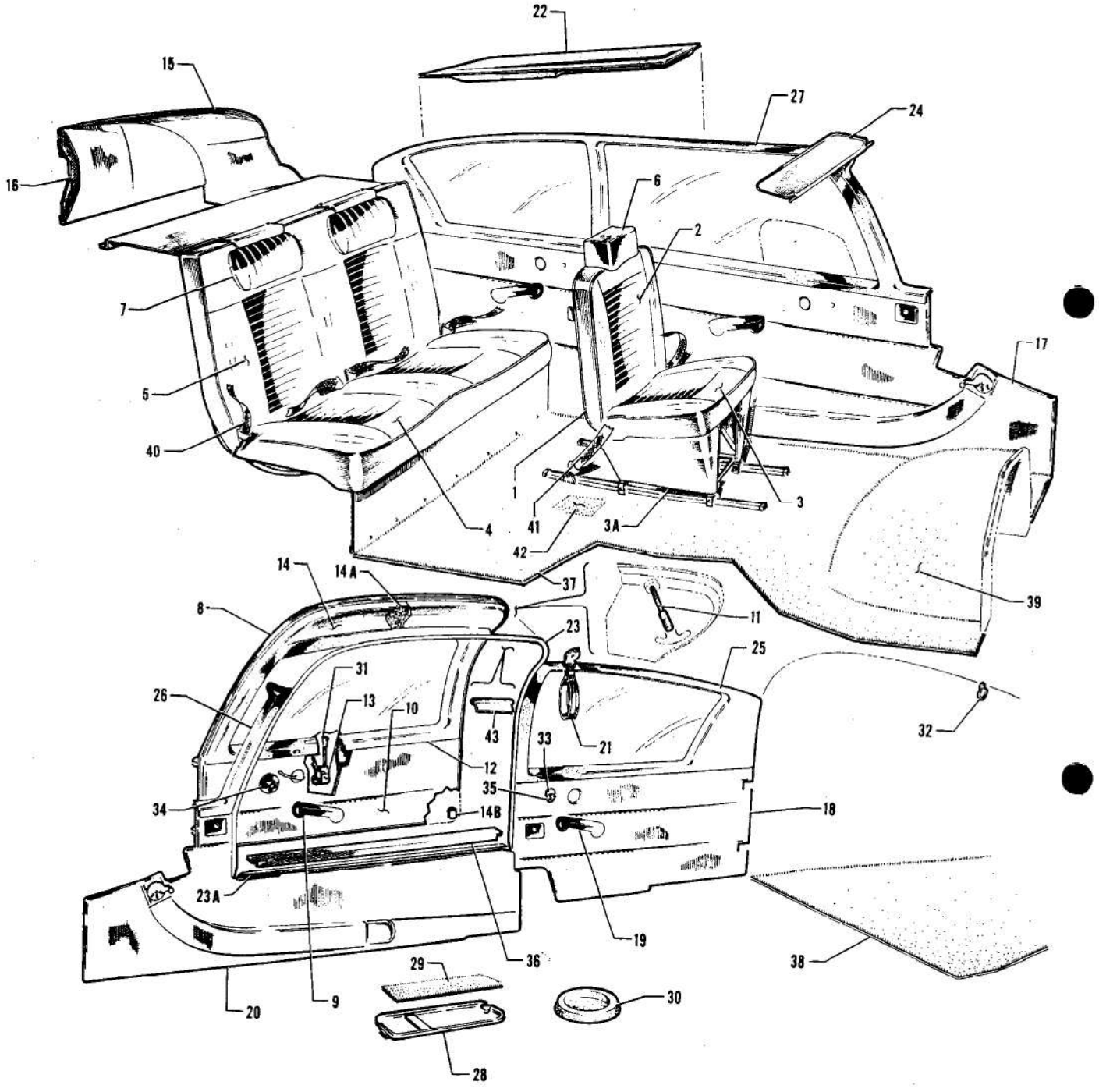

Figure 8A. Palm Beach Interior
(Serial Nos. 24-2844 to 24-3557 inclusive)

Figure and Index Number	Part Number	Code	NOMENCLATURE	No. Req.	SERIAL NUMBERS AFFECTED
8A-	23259		DRAWING - Palm Beach Interior		24-2844 to 24-3557 inclusive
	23404		DRAWING - Cockpit Finishing Installation		24-3285 to 24-3557 inclusive
-1	23090-00	A	SEAT ASSEMBLY - Front, left	1	24-2844 to 24-3557 inclusive
	23090-01	A	SEAT ASSEMBLY - Front, right	1	24-2844 to 24-3557 inclusive
	23090-30	D	SEAT ASSEMBLY - Front, left (with leather panel)	1	24-3285 to 24-3557 inclusive
	23090-31	D	SEAT ASSEMBLY - Front, right (with leather panel)	1	24-3285 to 24-3557 inclusive
	23090-32	CD	SEAT ASSEMBLY - Front, left (with cloth panel)	1	24-3285 to 24-3557 inclusive
	23090-33	CD	SEAT ASSEMBLY - Front, right (with cloth panel)	1	24-3285 to 24-3557 inclusive
-2	23090-20	A	CUSHION - Front seat back, left	1	24-2844 to 24-3557 inclusive
	23090-21	A	CUSHION - Front seat back, right	1	24-2844 to 24-3557 inclusive
	23090-26	D	CUSHION - Front seat back, left (with leather panel)	1	24-3285 to 24-3557 inclusive
	23090-27	D	CUSHION - Front seat back, right (with leather panel)	1	24-3285 to 24-3557 inclusive
	23090-34	CD	CUSHION - Front seat back, left (with cloth panel)	1	24-3285 to 24-3557 inclusive
	23090-35	CD	CUSHION - Front seat back, right (with cloth panel)	1	24-3285 to 24-3557 inclusive
-3	23090-24	AB	CUSHION - Front seat bottom, left	1	24-2844 to 24-3557 inclusive
	23090-25	AB	CUSHION - Front seat bottom, right	1	24-2844 to 24-3557 inclusive
	23090-28	BD	CUSHION - Front seat bottom, left (with leather panel)	1	24-3285 to 24-3557 inclusive
	23090-29	BD	CUSHION - Front seat bottom, right (with leather panel)	1	24-3285 to 24-3557 inclusive
	23090-36	BCD	CUSHION - Front seat bottom, left (with cloth panel)	1	24-3285 to 24-3557 inclusive
	23090-37	BCD	CUSHION - Front seat bottom, right (with cloth panel)	1	24-3285 to 24-3557 inclusive
-3a	23252-02	A	SKIRT ASSEMBLY - Front seat	1	24-2844 to 24-3557 inclusive
	23252-04	D	SKIRT ASSEMBLY - Front seat	1	24-3285 to 24-3557 inclusive
-4	23274-00	A	CUSHION ASSEMBLY - Rear seat bottom	1	24-2844 to 24-3557 inclusive
	23274-11	D	CUSHION ASSEMBLY - Rear seat bottom (with leather panel)	1	24-3285 to 24-3557 inclusive
	23274-12	CD	CUSHION ASSEMBLY - Rear seat bottom (with cloth panel)	1	24-3285 to 24-3557 inclusive
-5	23275-00	A	CUSHION ASSEMBLY - Rear seat back	1	24-2844 to 24-3557 inclusive
	23275-10	D	CUSHION ASSEMBLY - Rear seat back (with leather panel)	1	24-3285 to 24-3557 inclusive
	23275-13	CD	CUSHION ASSEMBLY - Rear seat back (with cloth panel)	1	24-3285 to 24-3557 inclusive
-6	19943-02		HEADREST ASSEMBLY - Front seat, gray	2	24-2844 to 24-3557 inclusive
	19943-07		HEADREST ASSEMBLY - Front seat, tan	2	24-2844 to 24-3557 inclusive
	19943-08		HEADREST ASSEMBLY - Front seat, green	2	24-3285 to 24-3557 inclusive
	19943-17		HEADREST ASSEMBLY - Front seat, red	2	24-3285 to 24-3557 inclusive
	19943-22		HEADREST ASSEMBLY - Front seat, blue	2	24-3285 to 24-3557 inclusive
-7	464 334		HEADREST ASSEMBLY - Rear seat, brown (23052-03)	2	24-2844 to 24-3557 inclusive
	464 333		HEADREST ASSEMBLY - Rear seat, gray (23052-02)	2	24-2844 to 24-3557 inclusive
	464 335		HEADREST ASSEMBLY - Rear seat, green (23052-04)	2	24-3285 to 24-3557 inclusive
	23469-00		HEADREST ASSEMBLY - Rear seat, red	2	24-3285 to 24-3557 inclusive
	23469-07		HEADREST ASSEMBLY - Rear seat, blue	2	24-3285 to 24-3557 inclusive
-8	23309-00	AE	DOOR ASSEMBLY - Cabin (complete) "180"	1	24-2844 to 24-3284 inclusive
	233 10-00	AE	DOOR ASSEMBLY - Cabin (complete) "250"	1	24-2844 to 24-3284 inclusive
	23364-00	AE	DOOR ASSEMBLY - Cabin (complete)	1	24-3285 to 24-3557 inclusive

A - Specify color gray, brown or green when ordering.
B - See Figure 12 for component parts not listed on this page.
C - Optional equipment.
D - Specify colors red or blue when ordering.
E - See Figure 11 for component parts not listed on this page.

When ordering, always specify Part Number, Description and Serial Number of Aircraft

Figure and Index Number	Part Number	Code	NOMENCLATURE	No. Req.	SERIAL NUMBERS AFFECTED
8A-9	22944-08		ARM REST ASSEMBLY - Door, charcoal	1	24-2844 to 24-3557 inclusive
	22944-09		ARM REST ASSEMBLY - Door, dark brown	1	24-2844 to 24-3557 inclusive
	22944-10		ARM REST ASSEMBLY - Door, dark green	1	24-3285 to 24-3557 inclusive
	23463-02		ARM REST ASSEMBLY - Door, red	1	24-3285 to 24-3557 inclusive
	23463-08		ARM REST ASSEMBLY - Door, blue	1	24-3285 to 24-3557 inclusive
-10	23270-05	A	PANEL ASSEMBLY - Door, lower (vinyl) "180"	1	24-2844 to 24-3284 inclusive
	23270-06	AE	PANEL ASSEMBLY - Door, lower (vinyl) "250"	1	24-2844 to 24-3557 inclusive
	23270-07	D	PANEL ASSEMBLY - Door, lower (leather)	1	24-3285 to 24-3557 inclusive
-11	21476-03		STUD - Auxiliary door latch "180"	1	24-2844 to 24-3284 inclusive
-12	23308-02		MOULDING - Door window, charcoal	1	
	23308-03		MOULDING - Door window, dark brown	1	
	23308-04		MOULDING - Door window, dark green	1	24-3285 to 24-3557 inclusive
-13	23238-02	FG	LATCH ASSEMBLY - Door "250"	1	24-2844 to 24-3284 inclusive
-14	21995-02		PANEL ASSEMBLY - Door, upper, gray	1	24-2844 to 24-3356, 24-3359
	21995-03		PANEL ASSEMBLY - Door, upper, sand	1	24-2844 to 24-3356, 24-3359
	21995-04	C	PANEL ASSEMBLY - Door, upper, green	1	
	21995-05	C	PANEL ASSEMBLY - Door, upper, sand	1	
	21995-06	C	PANEL ASSEMBLY - Door, upper, gray	1	
-14a	23355-00		PAD - Door trim cover	1	
-14b	24164-00		BRACKET - Door trim reinforcing, bottom	2	24-3531 to 24-3557 inclusive
-15	23298-00		HEADLINING ASSEMBLY - Sand	1	24-2844 to 24-3356, 24-3359
	23298-06		HEADLINING ASSEMBLY - Gray	1	24-2844 to 24-3356, 24-3359
	23298-10	C	HEADLINING ASSEMBLY - Gray	1	
	23298-11	C	HEADLINING ASSEMBLY - Sand	1	
	23298-12	C	HEADLINING ASSEMBLY - Green	1	
-16	23307-00	A	PANEL ASSEMBLY - Hat shelf	1	24-2844 to 24-3356, 24-3359
	23398-00	C	PANEL ASSEMBLY - Hat shelf, gray	1	
-17	23276-00	AB	PANEL ASSEMBLY - Cockpit, left (vinyl)	1	24-2844 to 24-3557 inclusive
	23276-09	BD	PANEL ASSEMBLY - Cockpit, left (leather)	1	24-3285 to 24-3557 inclusive
-18	23278-00	AB	PANEL ASSEMBLY - Cockpit, rear, right (vinyl)	1	24-2844 to 24-3557 inclusive
	23278-06	BD	PANEL ASSEMBLY - Cockpit, rear, right (leather)	1	24-3285 to 24-3557 inclusive
-19	22944-06		ARM REST ASSEMBLY - Charcoal	3	24-2844 to 24-3557 inclusive
	22944-07		ARM REST ASSEMBLY - Dark brown	3	24-2844 to 24-3557 inclusive
	22944-11		ARM REST ASSEMBLY - Dark green	3	24-3285 to 24-3557 inclusive
	23463-03		ARM REST ASSEMBLY - Red	3	24-3285 to 24-3557 inclusive
	23463-09		ARM REST ASSEMBLY - Blue	3	24-3285 to 24-3557 inclusive
-20	23277-00	AB	PANEL ASSEMBLY - Right, front (vinyl)	1	24-2844 to 24-3557 inclusive
	23277-09	BD	PANEL ASSEMBLY - Right, front (leather)	1	24-3285 to 24-3557 inclusive
-21	19927-02		LOOP ASSEMBLY - Assist, charcoal	2	24-2844 to 24-3557 inclusive
	19927-03		LOOP ASSEMBLY - Assist, dark brown	2	24-2844 to 24-3557 inclusive
	19927-04		LOOP ASSEMBLY - Assist, dark green	2	24-3285 to 24-3557 inclusive

A - Specify color gray, brown or green when ordering.
B - See Figure 8 for component parts not listed on this page.
C - Used on airplanes with serial numbers 24-3357, 24-3358, 24-3360 to 24-3557 inclusive.
D - Specify colors red or blue when ordering.
E - Used on PA-24-180 airplanes with serial numbers 24-3285 to 24-3557 inclusive.
F - See Figure 11 for latch assembly on airplanes with serial numbers 24-3285 to 24-3557 inclusive.
G - Used when lock knob is 14-1/2" from forward edge of door, if lock knob is 11-1/2" from forward edge of door order parts for serial numbers 24-3285 and up in Figure 11.

Figure and Index Number	Part Number	Code	NOMENCLATURE	No. Req.	SERIAL NUMBERS AFFECTED
8A-22	21309-06		PANEL - Cabin light, white	1	
-23	23305-02		STRIP - Weather, door, top and sides, gray	1	24-2844 to 24-3284 inclusive
	23305-05		STRIP - Weather, door, top and sides, sand	1	24-3844 to 24-3284 inclusive
	23305-16		STRIP - Weather, door, top and sides, green	1	24-3285 to 24-3557 inclusive
	23305-17		STRIP - Weather, door, top and sides, gray	1	24-3285 to 24-3557 inclusive
	23305-18		STRIP - Weather, door, top and sides, tan	1	24-3285 to 24-3557 inclusive
	23305-35		STRIP - Weather, door, top and sides, red	1	24-3285 to 24-3557 inclusive
	23305-37		STRIP - Weather, door, top and sides, blue	1	24-3285 to 24-3557 inclusive
-23a	23305-09		STRIP - Weather, door, bottom, green	1	24-3285 to 24-3557 inclusive
	23305-10		STRIP - Weather, door, bottom, gray	1	24-3285 to 24-3557 inclusive
	23305-11		STRIP - Weather, door, bottom, tan	1	24-3285 to 24-3557 inclusive
	23305-34		STRIP - Weather, door, bottom, red	1	24-3285 to 24-3557 inclusive
	23305-36		STRIP - Weather, door, bottom, blue	1	24-3285 to 24-3557 inclusive
-24	23040-04		VISOR ASSEMBLY - Gray	2	24-2844 to 24-3356, 24-3359
	23040-05		VISOR ASSEMBLY - Tan	2	24-2844 to 24-3356, 24-3359
	23040-08	A	VISOR ASSEMBLY - Gray	2	
	23040-09	A	VISOR ASSEMBLY - Sand	2	
	23040-10	A	VISOR ASSEMBLY - Green	2	
-25	23313-02		MOULDING - Window, right, rear, dark brown	1	
	23313-03		MOULDING - Window, right, rear, charcoal	1	
	23313-04		MOULDING - Window, right, rear, dark green	1	24-3285 to 24-3557 inclusive
-26	23314-02		MOULDING - Window, right, front, charcoal	1	
	23314-03		MOULDING - Window, right, front, dark brown	1	
	23314-04		MOULDING - Window, right, front, dark green	1	24-3285 to 24-3557 inclusive
-27	23315-02		MOULDING - Window, left, charcoal	1	
	23315-03		MOULDING - Window, left, brown	1	
	23315-04		MOULDING - Window, left, dark green	1	24-3285 to 24-3557 inclusive
-28	22468-09		DOOR ASSEMBLY - Landing gear release access, green	1	24-3285 to 24-3557 inclusive
	22468-10		DOOR ASSEMBLY - Landing gear release access, red	1	24-3285 to 24-3557 inclusive
	22468-11		DOOR ASSEMBLY - Landing gear release access, blue	1	24-3285 to 24-3557 inclusive
-29	23036-06		CARPET - Dark green	1	24-3285 to 24-3557 inclusive
	23036-08		CARPET - Red	1	24-3285 to 24-3557 inclusive
	23036-10		CARPET - Blue	1	24-3285 to 24-3557 inclusive
-30	20651-04		PLATE - Fuel valve protector, dark green "180"	1	24-3285 to 24-3557 inclusive
	22795-05		PLATE - Fuel valve protector, dark green "250"	1	24-3285 to 24-3557 inclusive
-31	31193-00		KNOB - Door lock, green (471 090)	1	
-32	565 446		HANGER - Coat (#XP-96208) Left	1	
-33	21257-06		PLACARD - Ventilator control knob, dark green	4	
	21257-07		PLACARD - Ventilator control knob, red	4	24-3285 to 24-3557 inclusive
	21257-08		PLACARD - Ventilator control knob, blue	4	24-3285 to 24-3557 inclusive
-34	21154-05		DEFLECTOR - Air, dark green	4	
-35	571 041		KNOB - Ventilator box, dark green	4	
	23459-00		KNOB - Ventilator box, red	4	
-36	20512-00		SILL - Door	1	24-2844 to 24-3557 inclusive
-37	23018-06		CARPET - Floor, dark green "250"	1	24-3285 to 24-3557 inclusive
	23018-08		CARPET - Floor, red "250"	1	24-3285 to 24-3557 inclusive
	23018-14		CARPET - Floor, blue "250"	1	24-3285 to 24-3557 inclusive
	23033-04		CARPET - Floor, green "180"	1	24-3285 to 24-3557 inclusive
	23033-05		CARPET - Floor, red "180"	1	24-3285 to 24-3557 inclusive
	23033-06		CARPET - Floor, blue "180"	1	24-3285 to 24-3557 inclusive
-38	23569-00		CARPET - Baggage compartment, gray	1	

A - Used on airplanes with serial numbers 24-3357, 24-3358, 24-3360 to 24-3557 inclusive.

Figure and Index Number	Part Number	Code	NOMENCLATURE	No. Req.	SERIAL NUMBERS AFFECTED
8A-39	23037-08		CARPET - Nose wheel cover, dark green	1	24-3285 to 24-3557 inclusive
	23037-11		CARPET - Nose wheel cover, red	1	24-3285 to 24-3557 inclusive
	23037-14		CARPET - Nose wheel cover, blue	1	24-3285 to 24-3557 inclusive
-40	13947-39		BELT ASSEMBLY - Safety, rear, gray	2	24-2844 to 24-3557 inclusive
	13947-55		BELT ASSEMBLY - Safety, rear, brown	2	24-2844 to 24-3557 inclusive
	13947-57		BELT ASSEMBLY - Safety, rear, green	2	24-3285 to 24-3557 inclusive
	13947-59		BELT ASSEMBLY - Safety, rear, red	2	24-3285 to 24-3557 inclusive
	13947-65		BELT ASSEMBLY - Safety, rear, blue	2	24-3285 to 24-3557 inclusive
-41	13947-33		BELT ASSEMBLY - Safety, front, gray	2	24-2844 to 24-3557 inclusive
	13947-46		BELT ASSEMBLY - Safety, front, brown	2	24-2844 to 24-3557 inclusive
	13947-52		BELT ASSEMBLY - Safety, front, green	2	24-3285 to 24-3557 inclusive
	13947-62		BELT ASSEMBLY - Safety, front, red	2	24-3285 to 24-3557 inclusive
	13947-68		BELT ASSEMBLY - Safety, front, blue	2	24-3285 to 24-3557 inclusive
-42	23035-06		CARPET - Fuel strainer access door, dark green	1	24-3285 to 24-3557 inclusive
	23035-08		CARPET - Fuel strainer access door, red	1	24-3285 to 24-3557 inclusive
	23035-10		CARPET - Fuel strainer access door, blue	1	24-3285 to 24-3557 inclusive
-43	23269-00	A	TRIM STRIP ASSEMBLY - Door	1	24-2844 to 24-3284 inclusive
	23269-03	A	TRIM STRIP ASSEMBLY - Door	1	24-3285 to 24-3557 inclusive

A - Specify color gray, green or sand when ordering.

When ordering, always specify Part Number, Description and Serial Number of Aircraft

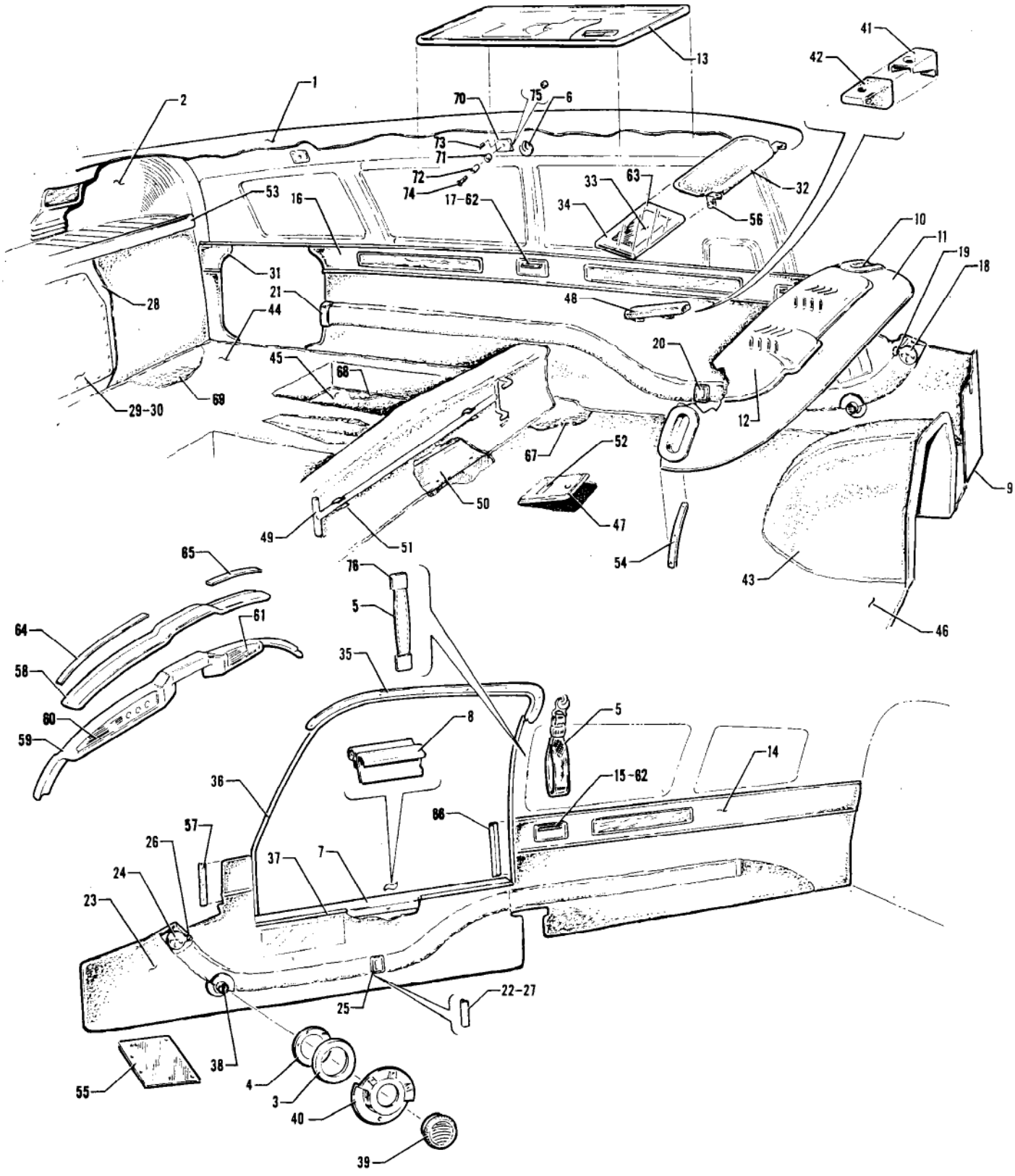

Figure 8B. Cockpit Finishing Installation
(Serial Nos. 24-4247, 24-4300 and up)

Figure and Index Number	Part Number	Code	NOMENCLATURE	No. Req.	SERIAL NUMBERS AFFECTED
8B-	25522	E	DRAWING - Cockpit Finishing Installation		
	26727		DRAWING - Cockpit Finishing Installation		24-4783, 24-4804 and up
-1	25419-00	E	HEADLINING ASSEMBLY	1	
	26771-00		HEADLINING ASSEMBLY	1	24-4783, 24-4804 and up
-2	25365-00	B	SHELF ASSEMBLY - Hat, beige	1	
	26319-00	C	SHELF ASSEMBLY - Hat, beige	1	
	26676-04		SHELF ASSEMBLY - Hat, beige	1	24-4783, 24-4804 and up
	26676-05		SHELF ASSEMBLY - Hat, white	1	24-4783, 24-4804 and up
-3	19513-89	E	WASHER - Cabin air outlet	2	
-4	24740-00	E	WASHER - Cabin air outlet	2	
-5	19927-08	E	LOOP ASSEMBLY - Assist, beige	1	
	19927-09		LOOP ASSEMBLY - Assist, beige	1	24-4783, 24-4804 to 24-5008 incl.
	44347-02		HANDLE ASSEMBLY - Assist, beige	1	24-5009 and up
	19927-10		LOOP ASSEMBLY - Assist, white	1	24-4783, 24-4804 to 24-5008 incl.
	44347-10		HANDLE ASSEMBLY - Assist, white	1	24-5009 and up
-6	565 446		HANGER - Coat (#XP-96208)	2	
-7	20512-00		SILL - Door	1	
-8	24173-00		STRIP - Side panel, retaining	1	
-9	20523-00		PLATE - Cable guard	1	
-10	21336-00	E	PLATE - Handhold	2	
	26372-00		PLATE - Handhold, left	1	24-4783, 24-4804 and up
	26372-01		PLATE - Handhold, right	1	24-4783, 24-4804 and up
-11	22454-00	E	COVER - Cowl, black	1	
	22454-02		COVER - Cowl, black	1	24-4783, 24-4804 and up
-12	22452-00		PANEL ASSEMBLY - Instrument access, black	1	24-4247, 24-4300 to 24-4752
	26330-00		PANEL ASSEMBLY - Instrument access, black	1	24-4753 to 24-4782 inclusive, 24-4784 to 24-4803 inclusive
	26659-00		PANEL ASSEMBLY - Instrument access, black	1	24-4783, 24-4804 and up
-13	24705-05	E	PANEL - Cabin light, beige	1	
	26637-02		PANEL - Cabin light, beige	1	24-4783, 24-4804 to 24-4934
	26637-03		PANEL - Cabin light, white	1	24-4783, 24-4804 to 24-4934
	26637-04		PANEL - Cabin light, beige	1	24-4935 and up
	26637-05		PANEL - Cabin light, white	1	24-4935 and up
-14	25475-00	AE	PANEL ASSEMBLY - Cockpit, rear, right	1	
	26541-00	D	PANEL ASSEMBLY - Cockpit, rear, right	1	24-4783, 24-4804 and up
-15	489 390		ASH TRAY ASSEMBLY - (#2A17680)	1	24-4247, 24-4300 to 24-4707
	41609-00		ASH TRAY ASSEMBLY	1	24-4708 to 24-4782 inclusive, 24-4784 to 24-4803 inclusive

A - When ordering, specify color red, blue, brown, gold or black.
B - Used on airplanes with serial numbers 24-4247, 24-4300 to 24-4716 inclusive, 24-4718 to 24-4722 inclusive and 24-4724.
C - Used on airplanes with serial numbers 24-4717, 24-4723, 24-4725 to 24-4782 inclusive, 24-4784 to 24-4803 inclusive.
D - When ordering, specify color red, blue, black, gold or white.
E - Used on airplanes with serial numbers 24-4247, 24-4300 to 24-4782 inclusive, 24-4784 to 24-4803 inclusive.

Figure and Index Number	Part Number	Code	NOMENCLATURE	No. Req.	SERIAL NUMBERS AFFECTED
8B-16	25476-00	AC	PANEL ASSEMBLY - Cockpit, left	1	
	26803-00	B	PANEL ASSEMBLY - Cockpit, left	1	24-4783, 24-4804 and up
-17	489 390		ASH TRAY ASSEMBLY - (#2A17680)	2	24-4247, 24-4300 to 24-4707
	41609-00		ASH TRAY ASSEMBLY	2	24-4708 to 24-4782 inclusive, 24-4784 to 24-4803 inclusive
-18	22334-00	C	VALVE - Hot air outlet	1	
	26374-00		VALVE - Hot air outlet	1	24-4783, 24-4804 and up
-19	471 059		KNOB - (3001-SD)	1	
-20	25533-00	C	PLATE - Hot air outlet	1	
	26656-00		PLATE - Hot air outlet	1	24-4783, 24-4804 and up
-21	25521-00		TRIM - Hot air duct	1	
-22	22448-00		CLIP - Carpet retainer	1	24-4783, 24-4804 and up
-23	25498-00	AC	PANEL ASSEMBLY - Cockpit, right, front	1	
	26675-12	B	PANEL ASSEMBLY - Cockpit, right, front	1	24-4783, 24-4804 and up
-24	22334-00	C	VALVE - Hot air outlet	1	
	26374-01		VALVE - Hot air outlet	1	24-4783, 24-4804 and up
-25	25533-00	C	PLATE - Hot air outlet	1	
	26656-00		PLATE - Hot air outlet	1	24-4783, 24-4804 and up
-26	471 059		KNOB - (3001-SD)	1	
-27	22448-00		CLIP - Carpet retainer	1	24-4783, 24-4804 and up
-28	25427-16	AC	PANEL ASSEMBLY - Cockpit, rear	1	
	26189-14	B	PANEL ASSEMBLY - Cockpit, rear	1	24-4783, 24-4804 and up
-29	25427-04	AC	PANEL ASSEMBLY - Insert	1	
-30	26189-13	B	PANEL ASSEMBLY - Insert	2	24-4783, 24-4804 and up
-31	25477-03	AC	PANEL ASSEMBLY - Cockpit trim, left, rear	1	
	26694-00	B	PANEL ASSEMBLY - Cockpit trim, left, rear	1	24-4783, 24-4804 and up
-32	23040-12	C	VISOR ASSEMBLY - Beige	2	
	23040-13		VISOR ASSEMBLY - Beige	2	24-4783, 24-4804 and up
	23040-14		VISOR ASSEMBLY - White	2	24-4783, 24-4804 and up
-33	24984-00	C	PLACARD - Check list	1	
	26916-00		PLACARD - Check list	1	24-4783, 24-4804 and up
	27241-00	CD	PLACARD - Check list	1	
-34	24935-00		SLEEVE ASSEMBLY - Sun visor placard	2	
-35	23269-07	C	TRIM STRIP - Door, beige	1	
	26756-02		TRIM STRIP - Door, beige	1	24-4783, 24-4804 and up
	26756-03		TRIM STRIP - Door, white	1	24-4783, 24-4804 and up
-36	23305-52	C	STRIP - Weather, top and sides, white (vinyl)	1	
	25156-18		STRIP - Weather, top and sides, beige (vinyl)	1	24-4783, 24-4804 and up
	25156-20		STRIP - Weather, top and sides, white (vinyl)	1	24-4783, 24-4804 and up
-37	25156-06	C	STRIP ASSEMBLY - Weather, white	1	
	25156-22		STRIP ASSEMBLY - Weather, red	1	24-4783, 24-4804 and up
	25156-24		STRIP ASSEMBLY - Weather, blue	1	24-4783, 24-4804 and up
	25156-26		STRIP ASSEMBLY - Weather, white	1	24-4783, 24-4804 and up
	25156-28		STRIP ASSEMBLY - Weather, black	1	24-4783, 24-4804 and up
	25156-30		STRIP ASSEMBLY - Weather, gold	1	24-4783, 24-4804 and up

A - When ordering, specify color red, blue, brown, gold or black.
B - When ordering, specify color red, blue, black, gold or white.
C - Used on airplanes with serial numbers 24-4247, 24-4300 to 24-4782, 24-4784 to 24-4803 inclusive.
D - Used on airplanes with fuel injection when Heated Alternate Air Induction Kit is installed.

When ordering, always specify Part Number, Description and Serial Number of Aircraft

PILOTEN-SERVICE
Straubing LSA II-A-170
Telefon (09421) 746

Figure and Index Number	Part Number	Code	NOMENCLATURE	No. Req.	SERIAL NUMBERS AFFECTED
8B-38	25254-02	A	PLATE ASSEMBLY - Cabin air outlet, beige	2	
	26532-02		PLATE ASSEMBLY - Cabin air outlet, red	2	24-4783, 24-4804 and up
	26532-03		PLATE ASSEMBLY - Cabin air outlet, blue	2	24-4783, 24-4804 and up
	26532-04		PLATE ASSEMBLY - Cabin air outlet, gold	2	24-4783, 24-4804 and up
	26532-05		PLATE ASSEMBLY - Cabin air outlet, black	2	24-4783, 24-4804 and up
-39	25593-00	A	LOUVER - Cabin air outlet, beige	1	
	473 184		LOUVER - Cabin air outlet, black	1	24-4783, 24-4804 and up
-40	24741-05	A	COVER - Cabin air outlet, beige	1	
	26441-02		COVER - Cabin air outlet, red	1	24-4783, 24-4804 and up
	26441-03		COVER - Cabin air outlet, blue	1	24-4783, 24-4804 and up
	26441-04		COVER - Cabin air outlet, gold	1	24-4783, 24-4804 and up
	26441-05		COVER - Cabin air outlet, black	1	24-4783, 24-4804 and up
-41	25283-00		BRACKET ASSEMBLY - Armrest support	2	
-42	25281-00		COVER - Armrest support bracket, beige	2	
	25281-02		COVER - Armrest support bracket, black	2	
	25281-03		COVER - Armrest support bracket, white	2	24-4783, 24-4804 and up
-43	25483-02	A	CARPET ASSEMBLY - Wheel cover, red	1	
	25483-04	A	CARPET ASSEMBLY - Wheel cover, brown	1	
	25483-03		CARPET ASSEMBLY - Wheel cover, blue	1	
	25483-05		CARPET ASSEMBLY - Wheel cover, gold	1	
	25483-14		CARPET ASSEMBLY - Wheel cover, black	1	
	25483-17		CARPET ASSEMBLY - Wheel cover, red	1	24-4783, 24-4804 and up
-44	25478-02		CARPET ASSEMBLY - Baggage compartment, red	1	24-4247, 24-4300 to 24-4703
	25478-06		CARPET ASSEMBLY - Baggage compartment, blue	1	24-4247, 24-4300 to 24-4703
	25478-10		CARPET ASSEMBLY - Baggage compartment, brown	1	24-4247, 24-4300 to 24-4703
	25478-14		CARPET ASSEMBLY - Baggage compartment, gold	1	24-4247, 24-4300 to 24-4703
	25478-22		CARPET ASSEMBLY - Baggage compartment, black	1	24-4247, 24-4300 to 24-4703
	25478-37		CARPET ASSEMBLY - Baggage compartment, red	1	24-4704 to 24-4782 inclusive, 24-4784 to 24-4803 inclusive
	25478-39		CARPET ASSEMBLY - Baggage compartment, brown	1	24-4704 to 24-4782 inclusive, 24-4784 to 24-4803 inclusive
	25478-38		CARPET ASSEMBLY - Baggage compartment, blue	1	24-4704 and up
	25478-40		CARPET ASSEMBLY - Baggage compartment, gold	1	24-4704 and up
	25478-41		CARPET ASSEMBLY - Baggage compartment, black	1	24-4704 and up
	25478-47		CARPET ASSEMBLY - Baggage compartment, red	1	24-4783, 24-4804 and up
-45	25479-02	A	CARPET ASSEMBLY - Footwell, red	2	
	25479-06	A	CARPET ASSEMBLY - Footwell, brown	2	
	25479-04		CARPET ASSEMBLY - Footwell, blue	2	
	25479-08		CARPET ASSEMBLY - Footwell, gold	2	
	25479-10		CARPET ASSEMBLY - Footwell, black	2	
	25479-17		CARPET ASSEMBLY - Footwell, red	2	24-4783, 24-4804 and up
-46	24420-10	A	CARPET ASSEMBLY - Floor, red	1	
	24420-12	A	CARPET ASSEMBLY - Floor, blue	1	
	24420-14	A	CARPET ASSEMBLY - Floor, brown	1	
	24420-16	A	CARPET ASSEMBLY - Floor, gold	1	
	24420-18	A	CARPET ASSEMBLY - Floor, black	1	
	26662-02		CARPET ASSEMBLY - Floor, red	1	24-4783, 24-4804 and up
	26662-03		CARPET ASSEMBLY - Floor, blue	1	24-4783, 24-4804 and up
	26662-04		CARPET ASSEMBLY - Floor, gold	1	24-4783, 24-4804 and up
	26662-05		CARPET ASSEMBLY - Floor, black	1	24-4783, 24-4804 and up

A - Used on airplanes with serial numbers 24-4247, 24-4300 to 24-4782 inclusive, 24-4784 to 24-4803 inclusive.

When ordering, always specify Part Number, Description and Serial Number of Aircraft

Figure and Index Number	Part Number	Code	NOMENCLATURE	No. Req.	SERIAL NUMBERS AFFECTED
8B-47	24843-04	A	CARPET ASSEMBLY - Fuel strainer access door, red	1	
	24843-08	A	CARPET ASSEMBLY - Fuel strainer access door, brown	1	
	24843-06		CARPET ASSEMBLY - Fuel strainer access door, blue	1	
	24843-10		CARPET ASSEMBLY - Fuel strainer access door, gold	1	
	24843-12		CARPET ASSEMBLY - Fuel strainer access door, black	1	
	24843-14		CARPET ASSEMBLY - Fuel strainer access door, red	1	24-4783, 24-4804 and up
-48	25481-02	A	ARMREST ASSEMBLY - Front, left, vinyl, red	1	
	25481-06	A	ARMREST ASSEMBLY - Front, left, vinyl, brown	1	
	25481-04		ARMREST ASSEMBLY - Front, left, vinyl, blue	1	
	25481-08		ARMREST ASSEMBLY - Front, left, leather, gold	1	
	25481-20		ARMREST ASSEMBLY - Front, left, vinyl, black	1	
	25481-24		ARMREST ASSEMBLY - Front, left, vinyl, red	1	24-4783, 24-4804 and up
	25481-36		ARMREST ASSEMBLY - Front, left, vinyl, gold	1	24-4783, 24-4804 and up
	25481-28		ARMREST ASSEMBLY - Front, left, leather, red	1	24-4783, 24-4804 and up
	25481-32		ARMREST ASSEMBLY - Front, left, leather, blue	1	24-4783, 24-4804 and up
	25481-40		ARMREST ASSEMBLY - Front, left, leather, black	1	24-4783, 24-4804 and up
-49	18994-06		BAR ASSEMBLY - Tow	1	
-50	25472-00		PLATE ASSEMBLY - Front floor shield	1	
-51	454 982		CLIP - (C4956-020-16)	2	
-52	22177-00		PLACARD - Fuel strainer access door	1	
-53	25567-00		STRIP ASSEMBLY - Hat shelf retainer	1	
-54	21373-00	A	STRIP - Cowl cover attachment, left	1	
	21373-01	A	STRIP - Cowl cover attachment, right	1	
-55	21525-02		PLATE - Heel, left	1	
	21525-03		PLATE - Heel, right	1	
-56	21824-00		SUPPORT - Sun visor	4	
-57	26768-00		STRIP - Side panel trim	2	24-4783, 24-4804 and up
-58	26616-00		COVER ASSEMBLY - Instrument panel trim	1	24-4783, 24-4804 and up
-59	26629-02		PANEL ASSEMBLY - Instrument panel trim	1	24-4783, 24-4804 and up
-60	26548-02	B	PLACARD - Stall warning and airspeed limitations	1	24-4783, 24-4804 and up
-61	26555-00		PLACARD - Operation limitations	1	24-4783, 24-4804 and up
-62	41609-00		ASH TRAY ASSEMBLY	3	24-4783, 24-4804 and up
-63	31391-00		PLACARD - Engine starting instructions	1	
-64	26773-02		SPACER - Access panel	1	24-4783, 24-4804 and up
-65	26773-03		SPACER - Access panel	1	24-4783, 24-4804 and up
-66	24173-02		STRIP - Side panel, retaining	1	24-4783, 24-4804 and up
-67	25695-00		COVER - Carpet, transparent, front	1	
-68	25696-03		COVER - Carpet, transparent, footwell	2	
-69	25696-02		COVER - Carpet, transparent, rear	1	
-70	32884-00		PLATE ASSEMBLY - Shoulder harness mounting	4	24-4922 and up
-71	29999-10		BUSHING - Shoulder harness plate	4	24-4922 and up
-72	29999-11		BUSHING - Shoulder harenss plate	4	24-4922 and up
-73	410 040		SCREW - (MS24694-S52)	16	24-4922 and up
	410 040	C	SCREW - (MS24694-S52) Top	8	24-4922 and up
	410 043	C	SCREW - (MS24694-S56) Bottom	8	24-4922 and up
-74	411 234		SCREW - (NAS222-15)	4	24-4922 and up
	407 565		WASHER - (AN960-416)	4	24-4922 and up
-75	64076-13	C	BUSHING - Shoulder harness plate	8	24-4922 and up
-76	484 464		RETAINER - Handle (#383)	2	24-5009 and up

A - Used on airplanes with serial numbers 24-4247, 24-4300 to 24-4782, 24-4784 to 24-4803 inclusive.
B - Refer to Figure 54 if Marker Beacon Test Switch is installed.
C - Used when Shoulder Harness with inertia reel is installed.

When ordering, always specify Part Number, Description and Serial Number of Aircraft

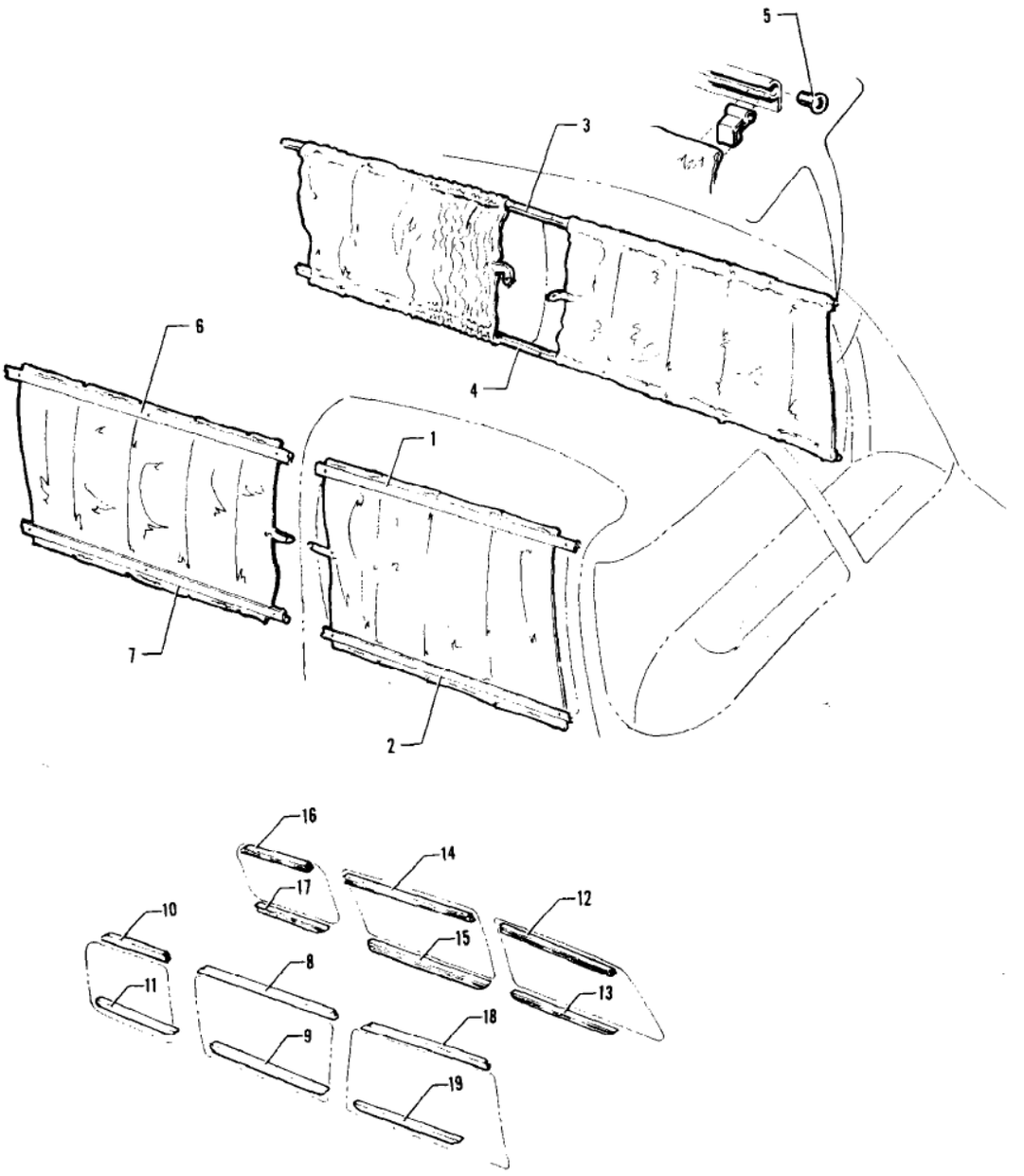

Figure 8C. Window Curtain Installation
(Serial Nos. 24-2844 and up, 26-2 and up)

Figure and Index Number	Part Number	Code	NOMENCLATURE	No. Req.	SERIAL NUMBERS AFFECTED
8C-	23311	A	DRAWING - Curtain Installation		
	25445	C	DRAWING - Curtain Installation		
	26775	V	DRAWING - Curtain Installation		24-4783, 24-4804 and up
-1	19166-20	X	TRACK - Window curtain, right, front, top	1	24-2844 to 24-3284 inclusive
	19166-12	X	TRACK - Window curtain, right, front, top	1	24-3285 to 24-3616 inclusive
	19166-12	Y	TRACK - Window curtain, right, front, top	1	24-2844 to 24-3616 inclusive
	24822-02	D	TRACK - Window curtain, right, front, top	1	
-2	19166-13	XY	TRACK - Window curtain, right, front, bottom	1	24-2844 to 24-3557 inclusive
	19166-22	XY	TRACK - Window curtain, right, front, bottom	1	24-3558 to 24-3616 inclusive
	24822-03	D	TRACK - Window curtain, right, front, bottom	1	
-3	19166-16	XY	TRACK - Window curtain, left, top	1	24-2844 to 24-3616 inclusive
	24550-05	A	TRACK - Window curtain, left, top	1	
	25412-04	C	TRACK - Window curtain, left, top	1	
-4	19166-17	XY	TRACK - Window curtain, left, bottom	1	24-2844 to 24-3616 inclusive
	24550-04	A	TRACK - Window curtain, left, bottom	1	
	25412-02	C	TRACK - Window curtain, left, bottom	1	
-5	19161-00	B	STOP - Curtain track	12	
-6	19166-14	XY	TRACK - Window, rear, right, top	1	24-2844 to 24-3616 inclusive
	24550-03	A	TRACK - Window, rear, right, top	1	
	25412-05	C	TRACK - Window, rear, right, top	1	
-7	19166-15	XY	TRACK - Window, rear, right, bottom	1	24-2844 to 24-3616 inclusive
	24550-02	A	TRACK - Window, rear, right, bottom	1	
	25412-03	C	TRACK - Window, rear, right, bottom	1	

NOTE

Individual curtains not available. See Curtain Kits on page 452.

A - Used on PA-24-180 and PA-24-250 with serial numbers 24-3617 and up, PA-24-400 with serial numbers 26-2 and up, PA-24-260 with serial numbers 24-3642, 24-4000 to 24-4246, 24-4248 to 24-4299 inclusive.

B - Used on PA-24-180 and PA-24-250 with serial numbers 24-2844 and up, PA-24-260 with serial numbers 24-3642, 24-4000 to 24-4782, 24-4784 to 24-4803 inclusive, and PA-24-400 with serial numbers 26-2 and up.

C - Used on PA-24-260 with serial numbers 24-4247, 24-4300 to 24-4782, 24-4784 to 24-4803 inclusive.

D - Used on PA-24-180 and PA-24-250 with serial numbers 24-3617 and up, PA-24-260 with serial numbers 24-3642, 24-4000 to 24-4782, 24-4784 to 24-4803 inclusive, and PA-24-400 with serial numbers 26-2 and up.

V - Used on PA-24-260 airplanes only.

X - Used on PA-24-180 airplanes only.

Y - Used on PA-24-250 airplanes only.

Figure and Index Number	Part Number	Code	NOMENCLATURE	No. Req.	SERIAL NUMBERS AFFECTED
8C-8	32553-14	V	TRACK - Window, center, right, top	1	24-4783, 24-4804 and up
-9	32553-15	V	TRACK - Window, center, right, bottom	1	24-4783, 24-4804 and up
-10	32553-20	V	TRACK - Window, rear, right, top	1	24-4783, 24-4804 and up
-11	32553-19	V	TRACK - Window, rear, right, bottom	1	24-4783, 24-4804 and up
-12	32553-17	V	TRACK - Window, rear, left, top	1	24-4783, 24-4804 and up
-13	32553-18	V	TRACK - Window, rear, left, bottom	1	24-4783, 24-4804 and up
-14	32553-16	V	TRACK - Window, center, left, top	1	24-4783, 24-4804 and up
-15	32553-13	V	TRACK - Window, center, left, bottom	1	24-4783, 24-4804 and up
-16	32553-12	V	TRACK - Window, front, left, top	1	24-4783, 24-4804 and up
-17	32553-24	V	TRACK - Window, front, left, bottom	1	24-4783, 24-4804 and up
-18	32553-10	V	TRACK - Window, front, right, top	1	24-4783, 24-4804 and up
-19	32553-11	V	TRACK - Window, front, right, bottom	1	24-4783, 24-4804 and up

V - Used on PA-24-260 airplanes only.

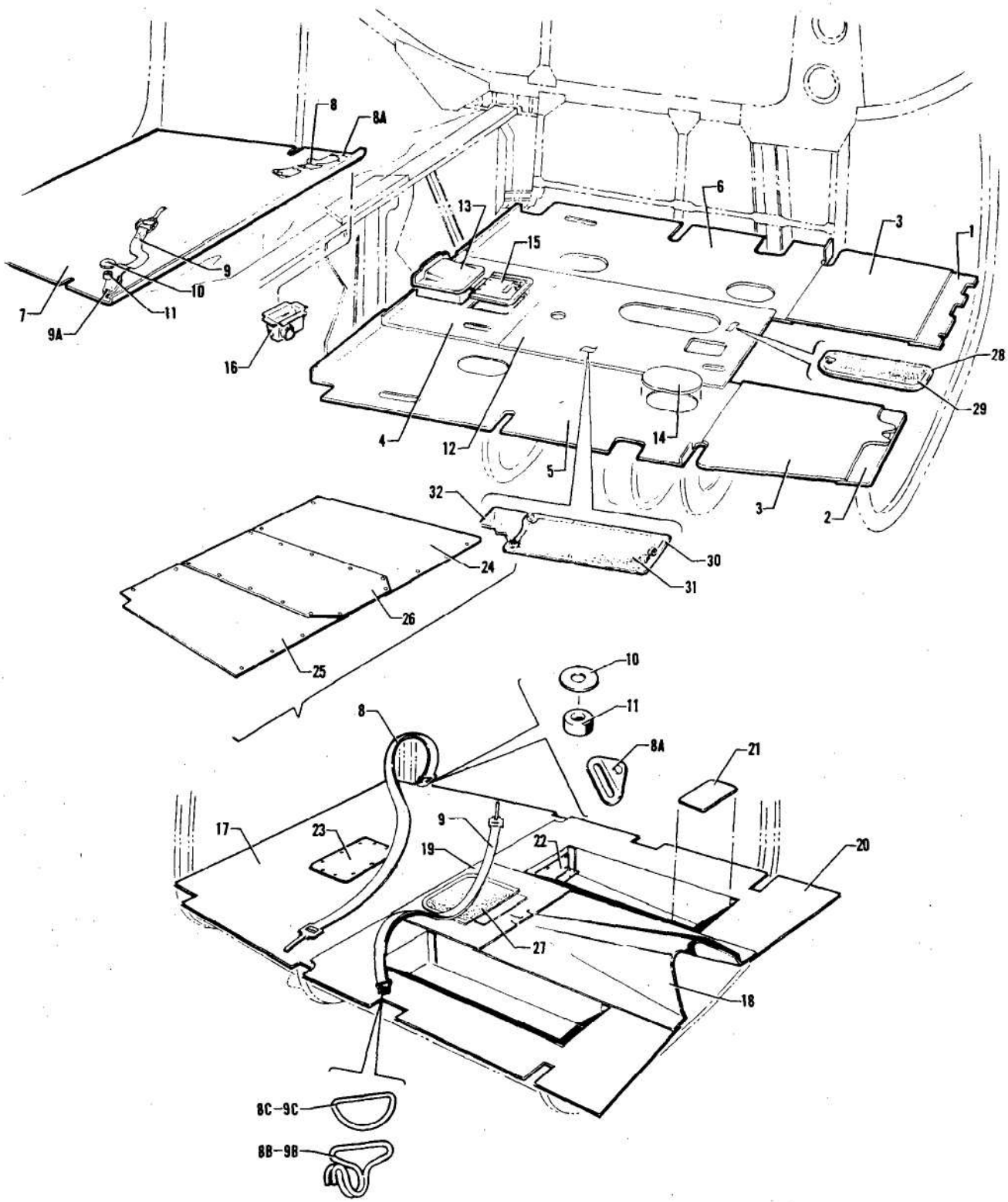

Figure 9. Floorboard Installation

Figure and Index Number	Part Number	Code	NOMENCLATURE	No. Req.	SERIAL NUMBERS AFFECTED
9-	20618	XY	DRAWING - Baggage Compartment, Floorboard Installation		
	22619	Z	DRAWING - Baggage Compartment, Floorboard Installation		
	20618	V	DRAWING - Baggage Compartment, Floorboard Installation		24-3642, 24-4000 to 24-4246 incl., 24-4248 to 24-4299 inclusive
	25331	V	DRAWING - Baggage Compartment, Floorboard Installation		
-1	20458-02	XY	FLOORBOARD ASSEMBLY - Front, left	1	
	23748-00	VZ	FLOORBOARD ASSEMBLY - Front, left	1	
-2	20458-03	X	FLOORBOARD ASSEMBLY - Front, right	1	24-1 to 24-102 inclusive
	21558-00	F	FLOORBOARD ASSEMBLY - Front, right	1	
	21558-04	V	FLOORBOARD ASSEMBLY - Front, right	1	24-4783, 24-4804 and up
-3	20454-00	XY	PLATE - Floorboard, left	1	
	23342-00	VZ	PLATE - Floorboard, left	1	
	20467-00	X	PLATE - Floorboard, right	1	24-1 to 24-102 inclusive
	20454-00	XY	PLATE - Floorboard, right	1	24-103 and up
	23342-01	VZ	PLATE - Floorboard, right	1	
-4	20446-00	A	FLOORBOARD ASSEMBLY - Center	1	
	22219-00	XY	FLOORBOARD ASSEMBLY - Center	1	24-2175, 24-2299 to 24-3238
	23629-00	VXY	FLOORBOARD ASSEMBLY - Center	1	24-3539 and up
	24416-00	Z	FLOORBOARD ASSEMBLY - Center	1	
-5	20449-01		FLOORBOARD ASSEMBLY - Outboard, right	1	24-1 to 24-61 inclusive
	21449-00		FLOORBOARD ASSEMBLY - Outboard, right	1	24-62 to 24-1251 inclusive
	21959-00	B	FLOORBOARD ASSEMBLY - Outboard, right	1	
	21959-04	C	FLOORBOARD ASSEMBLY - Outboard, right	1	
	21959-06	D	FLOORBOARD ASSEMBLY - Outboard, right	1	
	23676-00	E	FLOORBOARD ASSEMBLY - Outboard, right	1	
	23676-03	V	FLOORBOARD ASSEMBLY - Outboard, right	1	24-4783, 24-4804 and up

A - Used on PA-24-180 and PA-24-250 with serial numbers 24-1 to 24-2174, 24-2176 to 24-2298 inclusive.
B - Used on PA-24-180 and PA-24-250 with serial numbers 24-1252 to 24-2174, 24-2176 to 24-2298 inclusive.
C - Used on PA-24-180 with serial numbers 24-2733 to 24-3284 inclusive, and PA-24-250 with serial numbers 24-2733 to 24-2843 inclusive.
D - Used on PA-24-180 with serial numbers 24-3285 to 24-3538 inclusive, and PA-24-250 with serial numbers 24-2844 to 24-3538 inclusive.
E - Used on PA-24-180 and PA-24-250 with serial numbers 24-3539 and up, PA-24-260 with serial numbers 24-3642, 24-4000 to 24-4782, 24-4784 to 24-4803 inclusive, and PA-24-400 with serial numbers 26-2 and up.
F - Used on PA-24-180 and PA-24-250 with serial numbers 24-103 and up, PA-24-260 with serial numbers 24-3642, 24-4000 to 24-4782, 24-4784 to 24-4803 inclusive, and PA-24-400 with serial numbers 26-2 and up.
V - Used on PA-24-260 airplanes only.
X - Used on PA-24-180 airplanes only.
Y - Used on PA-24-250 airplanes only.
Z - Used on PA-24-400 airplanes only.

Figure and Index Number	Part Number	Code	NOMENCLATURE	No. Req.	SERIAL NUMBERS AFFECTED
9-6	20449-00	X	FLOORBOARD ASSEMBLY - Outboard, left	1	24-1 to 24-61 inclusive
	21447-00	XY	FLOORBOARD ASSEMBLY - Outboard, left	1	24-62 to 24-1251 inclusive
	21957-00	B	FLOORBOARD ASSEMBLY - Outboard, left	1	
	21957-04	XY	FLOORBOARD ASSEMBLY - Outboard, left	1	24-2175, 24-2299 to 24-2732
	21957-06	C	FLOORBOARD ASSEMBLY - Outboard, left	1	
	21957-08	D	FLOORBOARD ASSEMBLY - Outboard, left	1	
	23681-00	E	FLOORBOARD ASSEMBLY - Outboard, left	1	
	23681-05	V	FLOORBOARD ASSEMBLY - Outboard, left	1	24-4783, 24-4804 and up
-7	20524-00	XY	FLOORBOARD ASSEMBLY - Baggage compartment	1	24-1 to 24-2201 inclusive
	20524-03	XY	FLOORBOARD ASSEMBLY - Baggage compartment	1	24-2202 and up
	20524-07	Z	FLOORBOARD ASSEMBLY - Baggage compartment	1	26-2 to 26-124 inclusive
	20524-08	Z	FLOORBOARD ASSEMBLY - Baggage compartment	1	26-125 and up
	24817-00	V	FLOORBOARD ASSEMBLY - Baggage compartment	1	24-3642, 24-4000 to 24-4246 incl., 24-4248 to 24-4299 inclusive
-8	17871-08	XY	STRAP ASSEMBLY - Baggage tie down, LH (tip end)	2	24-1 to 24-2845 inclusive
	17871-10	F	STRAP ASSEMBLY - Baggage tie down, LH (tip end)	1	
	17871-06	V	STRAP ASSEMBLY - Baggage tie down, LH (tip end)	1	24-4247, 24-4300 and up
	25544-02	AV	STRAP ASSEMBLY - Baggage tie down, LH (tip end)	1	24-4247, 24-4300 and up
-8a	17847-00		FITTING - Baggage tie down attachment, left	1	
-8b	25379-00	AV	LINK - Baggage tie down attachment, left	1	24-4247, 24-4300 and up
-8c	25380-00	AV	LATCH - Baggage tie down attachment, left	1	24-4247, 24-4300 and up

A - Used when fifth and sixth seats are installed.
B - Used on PA-24-180 and PA-24-250 with serial numbers 24-1252 to 24-2174, 24-2176 to 24-2298 inclusive.
C - Used on PA-24-180 with serial numbers 24-2733 to 24-3284 inclusive, and PA-24-250 with serial numbers 24-2733 to 24-2843 inclusive.
D - Used on PA-24-180 with serial numbers 24-3285 to 24-3538 inclusive, and PA-24-250 with serial numbers 24-2844 to 24-3538 inclusive.
E - Used on PA-24-180 and PA-24-250 with serial numbers 24-3539 and up, PA-24-260 with serial numbers 24-3642, 24-4000 to 24-4782, 24-4784 to 24-4803 inclusive, and PA-24-400 with serial numbers 26-2 and up.
F - Used on PA-24-180 and PA-24-250 with serial numbers 24-2846 and up, PA-24-260 with serial numbers 24-3642, 24-4000 to 24-4246, 24-4248 to 24-4299 inclusive, and PA-24-400 with serial numbers 26-2 and up.
V - Used on PA-24-260 airplanes only.
X - Used on PA-24-180 airplanes only.
Y - Used on PA-24-250 airplanes only.
Z - Used on PA-24-400 airplanes only.

Figure and Index Number	Part Number	Code	NOMENCLATURE	No. Req.	SERIAL NUMBERS AFFECTED
9-9	17870-06	XY	STRAP ASSEMBLY - Baggage tie down, RH (buckle end)	2	24-1 to 24-2845 inclusive
	17870-08		STRAP ASSEMBLY - Baggage tie down, RH (buckle end)	1	24-2846 to 24-4246, 24-4248 to 24-4299, 26-2 and up
	25543-00	V	STRAP ASSEMBLY - Baggage tie down, RH (buckle end)	1	24-4247, 24-4300 and up
-9a	17847-00	F	FITTING - Baggage tie down attachment, right	1	
-9b	25379-00	V	LINK - Baggage tie down attachment, right	1	24-4247, 24-4300 and up
-9c	25380-00	V	LATCH - Baggage tie down attachment, right	1	24-4247, 24-4300 and up
-10	80122-07		WASHER - Baggage tie down strap	4	
-11	14175-45		BUSHING - Baggage tie down strap	4	
-12	20463-00	X	FLOORBOARD ASSEMBLY - Front center	1	24-1 to 24-61 inclusive
	21448-00	XY	FLOORBOARD ASSEMBLY - Front center	1	24-62 to 24-1251 inclusive
	21956-00	B	FLOORBOARD ASSEMBLY - Front center	1	
	21956-04	X	FLOORBOARD ASSEMBLY - Front center	1	24-2299 and up
	21956-04	Y	FLOORBOARD ASSEMBLY - Front center	1	24-2175, 24-2299 to 24-2843
	22720-00	E	FLOORBOARD ASSEMBLY - Front center	1	
	24418-00	Z	FLOORBOARD ASSEMBLY - Front center	1	
-13	20896-00	A	PLATE ASSEMBLY - Fuel line cover	1	
	20896-03	XY	PLATE ASSEMBLY - Fuel line cover	1	24-2175, 24-2299 to 24-3538
	23790-00		PLATE ASSEMBLY - Fuel line cover	1	24-3539 and up, 26-2 and up
-14	20480-00		PLATE - Access	4	24-1 to 24-2732 inclusive
	20480-00	C	PLATE - Access	3	
	22628-00	D	PLATE - Access	3	
	24552-00	VZ	PLATE - Access	6	
-15	22284-00		DOOR ASSEMBLY - Fuel strainer access (without carpet)	1	24-2175, 24-2299 and up, 26-2 and up
-16	24812-00	V	TAKE-OFF ASSEMBLY - Cabin air exhaust	1	24-3642, 24-4000 to 24-4246 incl., 24-4248 to 24-4299 inclusive
-17	25403-00	V	FLOORBOARD ASSEMBLY - Rear	1	24-4247, 24-4300 to 24-4504
-18	25373-02	V	FLOORBOARD ASSEMBLY - Center rear	1	24-4247, 24-4300 and up
-19	25373-03	V	FLOORBOARD ASSEMBLY - Center rear	1	24-4247, 24-4300 to 24-4703
	26119-00	V	FLOORBOARD ASSEMBLY - Center rear	1	24-4704 and up
-20	25378-00	V	FLOORBOARD ASSEMBLY - Left rear	1	24-4247, 24-4300 and up
	26147-00	V	FLOORBOARD ASSEMBLY - Right rear	1	24-4247, 24-4300 and up

A - Used on PA-24-180 and PA-24-250 with serial numbers 24-1 to 24-2174, 24-2176 to 24-2298 inclusive.
B - Used on PA-24-180 and PA-24-250 with serial numbers 24-1252 to 24-2174, 24-2176 to 24-2298 inclusive.
C - Used on PA-24-180 with serial numbers 24-2733 to 24-3284 inclusive, and PA-24-250 with serial numbers 24-2733 to 24-2843 inclusive.
D - Used on PA-24-180 with serial numbers 24-3285 and up, and PA-24-250 with serial numbers 24-2844 and up.
E - Used on PA-24-250 with serial numbers 24-2844 and up, and PA-24-260 with serial numbers 24-3642, 24-4000 to 24-4782, 24-4784 to 24-4803 inclusive.
F - Used on PA-24-180 and PA-24-250 with serial numbers 24-1 and up, PA-24-260 with serial numbers 24-3642, 24-4000 to 24-4246, 24-4248 to 24-4299 inclusive, and PA-24-400 with serial numbers 26-2 and up.
V - Used on PA-24-260 airplanes only.
X - Used on PA-24-180 airplanes only.
Y - Used on PA-24-250 airplanes only.
Z - Used on PA-24-400 airplanes only.

Figure and Index Number	Part Number	Code	NOMENCLATURE	No. Req.	SERIAL NUMBERS AFFECTED
9-6	20449-00	X	FLOORBOARD ASSEMBLY - Outboard, left	1	24-1 to 24-61 inclusive
	21447-00	XY	FLOORBOARD ASSEMBLY - Outboard, left	1	24-62 to 24-1251 inclusive
	21957-00	B	FLOORBOARD ASSEMBLY - Outboard, left	1	
	21957-04	XY	FLOORBOARD ASSEMBLY - Outboard, left	1	24-2175, 24-2299 to 24-2732
	21957-06	C	FLOORBOARD ASSEMBLY - Outboard, left	1	
	21957-08	D	FLOORBOARD ASSEMBLY - Outboard, left	1	
	23681-00	E	FLOORBOARD ASSEMBLY - Outboard, left	1	
	23681-05	V	FLOORBOARD ASSEMBLY - Outboard, left	1	24-4783, 24-4804 and up
-7	20524-00	XY	FLOORBOARD ASSEMBLY - Baggage compartment	1	24-1 to 24-2201 inclusive
	20524-03	XY	FLOORBOARD ASSEMBLY - Baggage compartment	1	24-2202 and up
	20524-07	Z	FLOORBOARD ASSEMBLY - Baggage compartment	1	26-2 to 26-124 inclusive
	20524-08	Z	FLOORBOARD ASSEMBLY - Baggage compartment	1	26-125 and up
	24817-00	V	FLOORBOARD ASSEMBLY - Baggage compartment	1	24-3642, 24-4000 to 24-4246 incl., 24-4248 to 24-4299 inclusive
-8	17871-08	XY	STRAP ASSEMBLY - Baggage tie down, LH (tip end)	2	24-1 to 24-2845 inclusive
	17871-10	F	STRAP ASSEMBLY - Baggage tie down, LH (tip end)	1	
	17871-06	V	STRAP ASSEMBLY - Baggage tie down, LH (tip end)	1	24-4247, 24-4300 and up
	25544-02	AV	STRAP ASSEMBLY - Baggage tie down, LH (tip end)	1	24-4247, 24-4300 and up
-8a	17847-00		FITTING - Baggage tie down attachment, left	1	
-8b	25379-00	AV	LINK - Baggage tie down attachment, left	1	24-4247, 24-4300 and up
-8c	25380-00	AV	LATCH - Baggage tie down attachment, left	1	24-4247, 24-4300 and up

A - Used when fifth and sixth seats are installed.
B - Used on PA-24-180 and PA-24-250 with serial numbers 24-1252 to 24-2174, 24-2176 to 24-2298 inclusive.
C - Used on PA-24-180 with serial numbers 24-2733 to 24-3284 inclusive, and PA-24-250 with serial numbers 24-2733 to 24-2843 inclusive.
D - Used on PA-24-180 with serial numbers 24-3285 to 24-3538 inclusive, and PA-24-250 with serial numbers 24-2844 to 24-3538 inclusive.
E - Used on PA-24-180 and PA-24-250 with serial numbers 24-3539 and up, PA-24-260 with serial numbers 24-3642, 24-4000 to 24-4782, 24-4784 to 24-4803 inclusive, and PA-24-400 with serial numbers 26-2 and up.
F - Used on PA-24-180 and PA-24-250 with serial numbers 24-2846 and up, PA-24-260 with serial numbers 24-3642, 24-4000 to 24-4246, 24-4248 to 24-4299 inclusive, and PA-24-400 with serial numbers 26-2 and up.
V - Used on PA-24-260 airplanes only.
X - Used on PA-24-180 airplanes only.
Y - Used on PA-24-250 airplanes only.
Z - Used on PA-24-400 airplanes only.

Figure and Index Number	Part Number	Code	NOMENCLATURE	No. Req.	SERIAL NUMBERS AFFECTED
9-9	17870-06	XY	STRAP ASSEMBLY - Baggage tie down, RH (buckle end)	2	24-1 to 24-2845 inclusive
	17870-08		STRAP ASSEMBLY - Baggage tie down, RH (buckle end)	1	24-2846 to 24-4246, 24-4248 to 24-4299, 26-2 and up
	25543-00	V	STRAP ASSEMBLY - Baggage tie down, RH (buckle end)	1	24-4247, 24-4300 and up
-9a	17847-00	F	FITTING - Baggage tie down attachment, right	1	
-9b	25379-00	V	LINK - Baggage tie down attachment, right	1	24-4247, 24-4300 and up
-9c	25380-00	V	LATCH - Baggage tie down attachment, right	1	24-4247, 24-4300 and up
-10	80122-07		WASHER - Baggage tie down strap	4	
-11	14175-45		BUSHING - Baggage tie down strap	4	
-12	20463-00	X	FLOORBOARD ASSEMBLY - Front center	1	24-1 to 24-61 inclusive
	21448-00	XY	FLOORBOARD ASSEMBLY - Front center	1	24-62 to 24-1251 inclusive
	21956-00	B	FLOORBOARD ASSEMBLY - Front center	1	
	21956-04	X	FLOORBOARD ASSEMBLY - Front center	1	24-2299 and up
	21956-04	Y	FLOORBOARD ASSEMBLY - Front center	1	24-2175, 24-2299 to 24-2843
	22720-00	E	FLOORBOARD ASSEMBLY - Front center	1	
	24418-00	Z	FLOORBOARD ASSEMBLY - Front center	1	
-13	20896-00	A	PLATE ASSEMBLY - Fuel line cover	1	
	20896-03	XY	PLATE ASSEMBLY - Fuel line cover	1	24-2175, 24-2299 to 24-3538
	23790-00		PLATE ASSEMBLY - Fuel line cover	1	24-3539 and up, 26-2 and up
-14	20480-00		PLATE - Access	4	24-1 to 24-2732 inclusive
	20480-00	C	PLATE - Access	3	
	22628-00	D	PLATE - Access	3	
	24552-00	VZ	PLATE - Access	6	
-15	22284-00		DOOR ASSEMBLY - Fuel strainer access (without carpet)	1	24-2175, 24-2299 and up, 26-2 and up
-16	24812-00	V	TAKE-OFF ASSEMBLY - Cabin air exhaust	1	24-3642, 24-4000 to 24-4246 incl., 24-4248 to 24-4299 inclusive
-17	25403-00	V	FLOORBOARD ASSEMBLY - Rear	1	24-4247, 24-4300 to 24-4504
-18	25373-02	V	FLOORBOARD ASSEMBLY - Center rear	1	24-4247, 24-4300 and up
-19	25373-03	V	FLOORBOARD ASSEMBLY - Center rear	1	24-4247, 24-4300 to 24-4703
	26119-00	V	FLOORBOARD ASSEMBLY - Center rear	1	24-4704 and up
-20	25378-00	V	FLOORBOARD ASSEMBLY - Left rear	1	24-4247, 24-4300 and up
	26147-00	V	FLOORBOARD ASSEMBLY - Right rear	1	24-4247, 24-4300 and up

A - Used on PA-24-180 and PA-24-250 with serial numbers 24-1 to 24-2174, 24-2176 to 24-2298 inclusive.
B - Used on PA-24-180 and PA-24-250 with serial numbers 24-1252 to 24-2174, 24-2176 to 24-2298 inclusive.
C - Used on PA-24-180 with serial numbers 24-2733 to 24-3284 inclusive, and PA-24-250 with serial numbers 24-2733 to 24-2843 inclusive.
D - Used on PA-24-180 with serial numbers 24-3285 and up, and PA-24-250 with serial numbers 24-2844 and up.
E - Used on PA-24-250 with serial numbers 24-2844 and up, and PA-24-260 with serial numbers 24-3642, 24-4000 to 24-4782, 24-4784 to 24-4803 inclusive.
F - Used on PA-24-180 and PA-24-250 with serial numbers 24-1 and up, PA-24-260 with serial numbers 24-3642, 24-4000 to 24-4246, 24-4248 to 24-4299 inclusive, and PA-24-400 with serial numbers 26-2 and up.
V - Used on PA-24-260 airplanes only.
X - Used on PA-24-180 airplanes only.
Y - Used on PA-24-250 airplanes only.
Z - Used on PA-24-400 airplanes only.

Figure and Index Number	Part Number	Code	NOMENCLATURE	No. Req.	SERIAL NUMBERS AFFECTED
9-21	25605-00	V	PLATE - Access	1	24-4247, 24-4300 and up
-22	25604-00	V	PLATE - Access	1	24-4247, 24-4300 and up
-23	25692-00	V	PLATE - Access	1	24-4247, 24-4300 to 24-4504
-24	25742-00	V	FLOORBOARD ASSEMBLY - Rear, left	1	24-4505 and up
-25	25740-00	V	FLOORBOARD ASSEMBLY - Rear, right	1	24-4505 and up
-26	25741-00	V	FLOORBOARD ASSEMBLY - Rear, center	1	24-4505 and up
-27	26130-06	V	DOOR ASSEMBLY - Servo access, brown carpet	1	24-4704 to 24-4782 inclusive, 24-4784 to 24-4803 inclusive
	26130-04	V	DOOR ASSEMBLY - Servo access, red carpet	1	24-4704 to 24-4782 inclusive
	26130-05	V	DOOR ASSEMBLY - Servo access, blue carpet	1	24-4704 and up
	26130-07	V	DOOR ASSEMBLY - Servo access, gold carpet	1	24-4704 and up
	26130-08	V	DOOR ASSEMBLY - Servo access, black carpet	1	24-4704 and up
	26130-09	V	DOOR ASSEMBLY - Servo access, red carpet	1	24-4783, 24-4804 and up
-28	20897-00	X	DOOR ASSEMBLY - Landing gear release access	1	24-1 to 24-61 inclusive
	21453-00	XY	DOOR ASSEMBLY - Landing gear release access	1	24-62 to 24-173 inclusive
	21453-06	XY	DOOR ASSEMBLY - Landing gear release access	1	24-174 to 24-336 inclusive
	21453-07	XY	DOOR ASSEMBLY - Landing gear release access	1	24-337 to 24-1476 inclusive
	21453-09	A	DOOR ASSEMBLY - Landing gear release access, red	1	
	22468-02	B	DOOR ASSEMBLY - Landing gear release access, red	1	
	21453-10	A	DOOR ASSEMBLY - Landing gear release access, brown	1	
	22468-04	B	DOOR ASSEMBLY - Landing gear release access, brown	1	
	21453-11	A	DOOR ASSEMBLY - Landing gear release access, green	1	
	22468-05	B	DOOR ASSEMBLY - Landing gear release access, green	1	
	21453-12	A	DOOR ASSEMBLY - Landing gear release access, blue	1	
	22468-03	B	DOOR ASSEMBLY - Landing gear release access, blue	1	
	22468-07	DXY	DOOR ASSEMBLY - Landing gear release access, gray	1	24-2844 to 24-3557 inclusive
	22468-08	DXY	DOOR ASSEMBLY - Landing gear release access, brown	1	24-2844 to 24-3557 inclusive
	22468-13		DOOR ASSEMBLY - Landing gear release access, red	1	24-3558 to 24-4098, 26-2 and up
	22468-14		DOOR ASSEMBLY - Landing gear release access, blue	1	24-3558 to 24-4098, 26-2 and up
	22468-15	XYZ	DOOR ASSEMBLY - Landing gear release access, brown	1	24-3558 and up, 26-2 and up
	22468-16	V	DOOR ASSEMBLY - Landing gear release access, russet	1	24-3624, 24-4000 to 24-4098 incl.
	22468-17	C	DOOR ASSEMBLY - Landing gear release access, red	1	
	22468-18	C	DOOR ASSEMBLY - Landing gear release access, blue	1	
	22468-20	C	DOOR ASSEMBLY - Landing gear release access, russet	1	
	22468-21	E	DOOR ASSEMBLY - Landing gear release access, red	1	
	22468-22	E	DOOR ASSEMBLY - Landing gear release access, blue	1	
	22468-23	E	DOOR ASSEMBLY - Landing gear release access, brown	1	
	22468-24	E	DOOR ASSEMBLY - Landing gear release access, gold	1	
	22468-25	E	DOOR ASSEMBLY - Landing gear release access, black	1	

A - Used on PA-24-180 and PA-24-250 with serial numbers 24-1477 to 24-2174, 24-2176 to 24-2298 inclusive.
B - Used on PA-24-180 and PA-24-250 with serial numbers 24-2175, 24-2299 to 24-2843 inclusive.
C - Used on PA-24-260 with serial numbers 24-4099 to 24-4246, 24-4248 to 24-4299 inclusive.
D - If Palm Beach Interior is installed, see Figure 8A.
E - Used on PA-24-260 with serial numbers 24-4247, 24-4300 to 24-4782, 24-4784 to 24-4803 inclusive.
V - Used on PA-24-260 airplanes only.
X - Used on PA-24-180 airplanes only.
Y - Used on PA-24-250 airplanes only.
Z - Used on PA-24-400 airplanes only.

Figure and Index Number	Part Number	Code	NOMENCLATURE	No. Req.	SERIAL NUMBERS AFFECTED
9-29	20897-04	X	CARPET - Dark gray	1	24-1 to 24-61 inclusive
	21453-04	XY	CARPET - Dark gray	1	24-62 to 24-173 inclusive
	21453-05	XY	CARPET - Dark gray	1	24-174 to 24-336 inclusive
	21453-08	XY	CARPET - Dark gray	1	24-337 to 24-1476 inclusive
	21453-13	D	CARPET - Red	1	
	22467-02	E	CARPET - Red	1	
	21453-14	D	CARPET - Brown	1	
	22467-04	E	CARPET - Brown	1	
	21453-15	D	CARPET - Green	1	
	22467-05	E	CARPET - Green	1	
	21453-16	D	CARPET - Blue	1	
	22467-03	E	CARPET - Blue	1	
-29	23036-02		CARPET - Gray	1	24-2844 to 24-3557 inclusive
	23036-03		CARPET - Brown	1	24-2844 to 24-3557 inclusive
	23036-18	AC	CARPET - Red	1	
	23036-19	AC	CARPET - Blue	1	
	23036-20	AC	CARPET - Russet	1	
	23036-22	B	CARPET - Red	1	
	23036-24	B	CARPET - Blue	1	
	23036-26	B	CARPET - Brown	1	
	23036-28	B	CARPET - Gold	1	
	23036-30	B	CARPET - Black	1	
-30	26506-03	V	DOOR ASSEMBLY - Landing gear release access, red	1	24-4783, 24-4804 and up
	26506-04	V	DOOR ASSEMBLY - Landing gear release access, blue	1	24-4783, 24-4804 and up
	26506-05	V	DOOR ASSEMBLY - Landing gear release access, gold	1	24-4783, 24-4804 and up
	26506-06	V	DOOR ASSEMBLY - Landing gear release access, black	1	24-4783, 24-4804 and up
-31	26503-02	V	CARPET - Red	1	24-4783, 24-4804 and up
	26503-03	V	CARPET - Blue	1	24-4783, 24-4804 and up
	26503-04	V	CARPET - Gold	1	24-4783, 24-4804 and up
	26503-05	V	CARPET - Black	1	24-4783, 24-4804 and up
-32	26520-00	V	FLOORBOARD ASSEMBLY - Center	1	24-4783, 24-4804 and up

A.- If Palm Beach Interior is installed, see Figure 8A.
B - Used on PA-24-260 with serial numbers 24-4247, 24-4300 to 24-4782, 24-4784 to 24-4803 inclusive.
C - Used on PA-24-260 with serial numbers 24-4099 to 24-4246, 24-4248 to 24-4299 inclusive.
D - Used on PA-24-180 and PA-24-250 with serial numbers 24-1477 to 24-2174, 24-2176 to 24-2298 inclusive.
E - Used on PA-24-180 and PA-24-250 with serial numbers 24-2175, 24-2299 to 24-2843 inclusive.
V - Used on PA-24-260 airplanes only.
X - Used on PA-24-180 airplanes only.
Y - Used on PA-24-250 airplanes only.

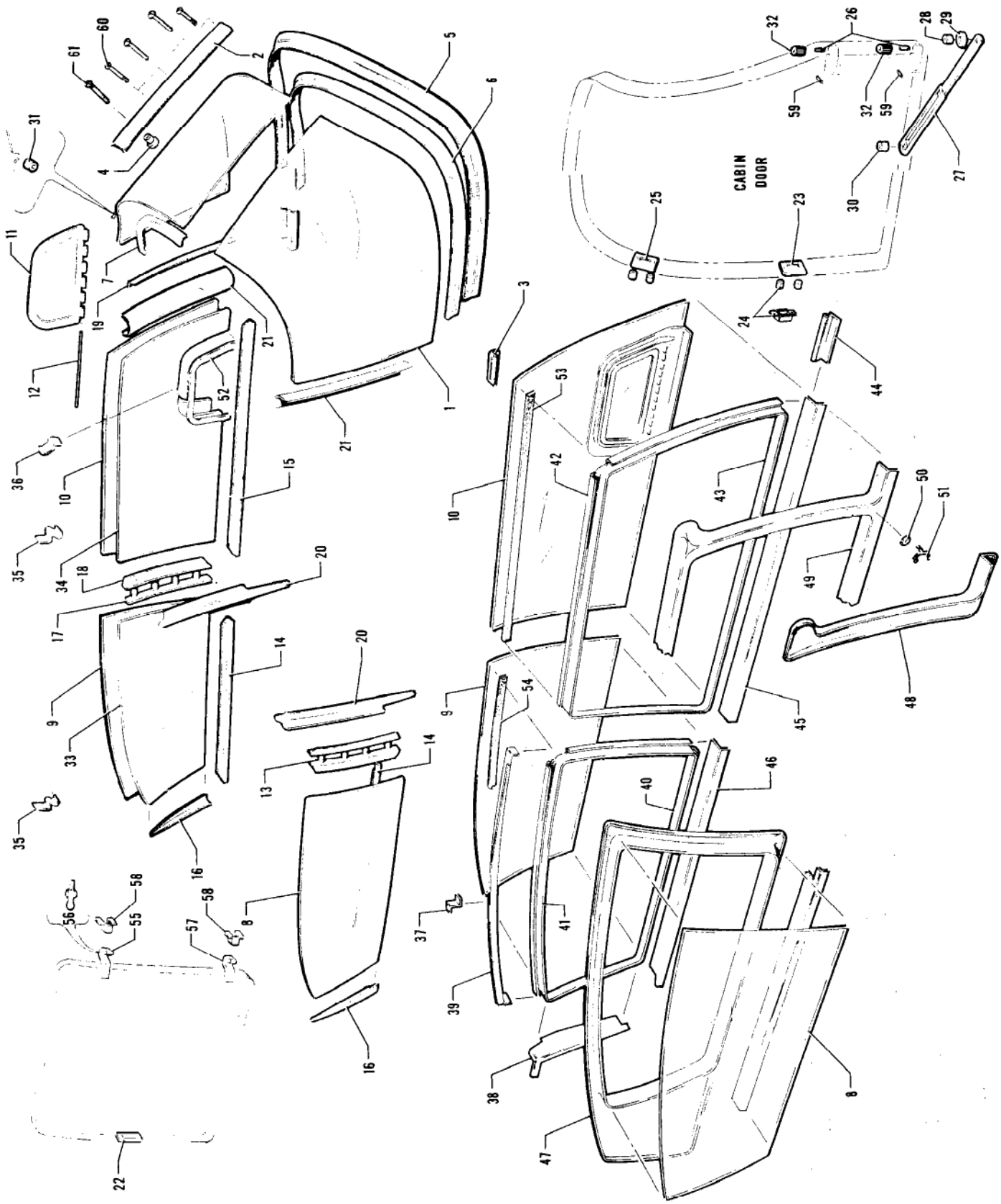

Figure 10. Fuselage Enclosure Installation

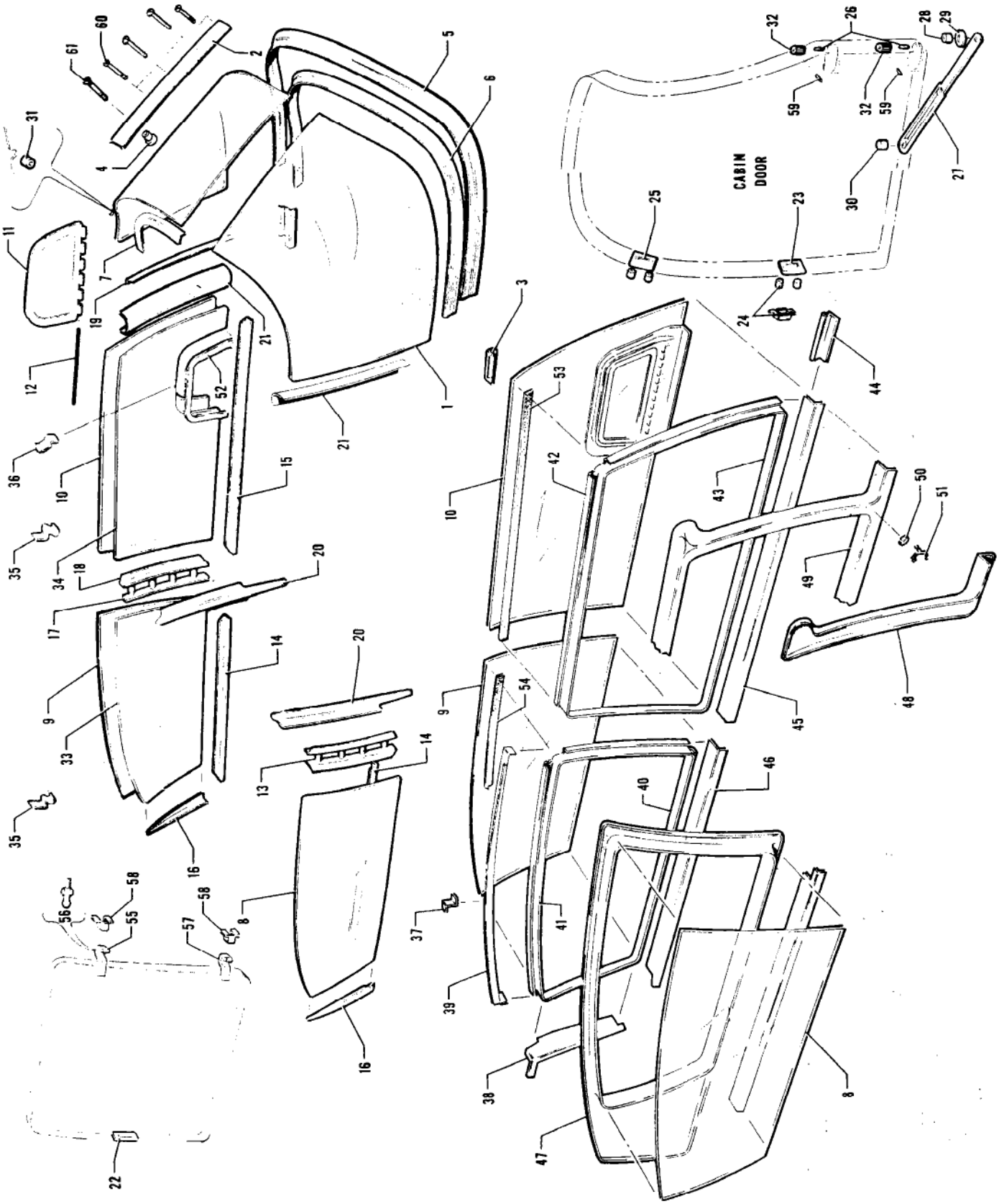

Figure 10. Fuselage Enclosure Installation

Figure and Index Number	Part Number	Code	NOMENCLATURE	No. Req.	SERIAL NUMBERS AFFECTED
10-	20669	XY	DRAWING - Window Installation		24-1 to 24-2843 inclusive
	23128	XY	DRAWING - Window Installation		24-2844 to 24-3557 inclusive
	23312	BXY	DRAWING - Window Installation		24-3558 and up
	24044	VZ	DRAWING - Window Installation		
	20677		DRAWING - Windshield Installation		
	20758	XY	DRAWING - Window Trim Strip Installation		24-1 to 24-2843 inclusive
	23129	XY	DRAWING - Window Trim Strip Installation		24-2844 to 24-3557 inclusive
	20940	CXY	DRAWING - Fuselage Assembly (Complete)		
	23120	DXY	DRAWING - Fuselage Assembly (Complete)		
	24264	Z	DRAWING - Fuselage Assembly (Complete)		
	24879	V	DRAWING - Fuselage Assembly (Complete)		24-3642, 24-4000 to 24-4246 incl., 24-4248 to 24-4299 inclusive
-1	20677-10		WINDSHIELD ASSEMBLY - Left	1	
	20677-09		WINDSHIELD ASSEMBLY - Right	1	
-2	20715-00		TRIM STRIP - Windshield, center	1	
-3	20719-00	XYZ	TRIM STRIP - Windshield, left	1	
	20719-01	XYZ	TRIM STRIP - Windshield, right	1	
-4	18359-00		NUT - Tubular	5	
	406 701		NUT - Cap	5	
-5	20677-08		COLLAR - Windshield, outside	1	
-6	20677-05		COLLAR - Windshield, inside	1	
-7	20677-06		ANGLE - Windshield, top, left	1	
	20677-07		ANGLE - Windshield, top, right	1	
-8	20672-01		WINDOW - Rear, right	1	
-9	20672-00		WINDOW - Rear, left	1	
-10	20676-00	XY	WINDOW ASSEMBLY - Front, left	1	
	20676-03	VZ	WINDOW ASSEMBLY - Front, left	1	
-11	21027-00		WINDOW ASSEMBLY - Storm	1	
-12	21025-04		PIN - Storm window hinge	1	
-13	14843-10		BUSHING	8	
-14	20669-04	XY	ANGLE - Left rear window, bottom	1	24-1 to 24-3557 inclusive
	20669-03	XY	ANGLE - Right rear window, bottom	1	24-1 to 24-3557 inclusive
-15	20669-02	XY	ANGLE - Left front window, bottom	1	24-1 to 24-1251 inclusive
	21914-00	XY	TRIM STRIP - Window, bottom	1	24-1252 to 24-3557 inclusive

A - Used on PA-24-180, PA-24-250 and PA-24-260 with serial numbers 24-1 to 24-4246 inclusive, 24-4248 to 24-4299 inclusive, and PA-24-400 with serial numbers 26-2 and up.
B - Used on PA-24-180 and PA-24-250 with serial numbers 24-2844 to 24-3557 if Palm Beach Interior has been installed.
C - Used on PA-24-180 with serial numbers 24-3285 and up, and PA-24-250 with serial numbers 24-2844 and up.
D - Used on PA-24-180 with serial numbers 24-1 to 24-3284 and PA-24-250 with serial numbers 24-105 to 24-2843 inclusive.
V - Used on PA-24-260 airplanes only.
X - Used on PA-24-180 airplanes only.
Y - Used on PA-24-250 airplanes only.
Z - Used on PA-24-400 airplanes only.

Figure and Index Number	Part Number	Code	NOMENCLATURE	No. Req.	SERIAL NUMBERS AFFECTED
10-16	20669-10	XY	ANGLE - Left rear window, rear	1	24-1 to 24-3557 inclusive
	20669-09	XY	ANGLE - Right rear window, rear	1	24-1 to 24-3557 inclusive
-17	20669-06	XY	ANGLE - Left rear window, front	1	24-1 to 24-2843 inclusive
	23128-04	XY	ANGLE - Left rear window, front	1	24-2844 to 24-3557 inclusive
	20669-07	XY	ANGLE - Right rear window, front	1	24-1 to 24-2843 inclusive
	23128-02	XY	ANGLE - Right rear window, front	1	24-2844 to 24-3557 inclusive
-18	20669-05	XY	ANGLE - Left front window, rear	1	24-1 to 24-2843 inclusive
	23128-03	XY	ANGLE - Left front window, rear	1	24-2844 to 24-3557 inclusive
-19	20669-08	XY	ANGLE - Left front window, front	1	24-1 to 24-3557 inclusive
-20	20758-04	XY	MOULDING - Window, left, center, black	1	24-1 to 24-1476 inclusive
	20758-08	XY	MOULDING - Window, left, center, gray	1	24-1477 to 24-2843 inclusive
	23129-02	CXY	MOULDING - Window, left, center, dark brown	1	24-2844 to 24-3557 inclusive
	23129-03	CXY	MOULDING - Window, left, center, light charcoal	1	24-2844 to 24-3557 inclusive
	20758-05	XY	MOULDING - Window, right, center, black	1	24-1 to 24-1476 inclusive
	20758-09	XY	MOULDING - Window, right, center, gray	1	24-1477 to 24-2843 inclusive
	23129-04	CXY	MOULDING - Window, right, center, dark brown	1	24-2844 to 24-3557 inclusive
	23129-05	CXY	MOULDING - Window, right, center, light charcoal	1	24-2844 to 24-3557 inclusive
-21	20758-02	XY	MOULDING - Window, right front, black	1	24-1 to 24-1476 inclusive
	20758-06	XY	MOULDING - Window, right front, gray	1	24-1477 to 24-2843 inclusive
	20758-12	CXY	MOULDING - Window, right front, dark brown	1	24-2844 to 24-3557 inclusive
	20758-13	CXY	MOULDING - Window, right front, light charcoal	1	24-2844 to 24-3557 inclusive
	20758-03	XY	MOULDING - Window, left front, black	1	24-1 to 24-1476 inclusive
	20758-07	XY	MOULDING - Window, left front, gray	1	24-1477 to 24-2843 inclusive
	20758-14	CXY	MOULDING - Window, left front, dark brown	1	24-2844 to 24-3557 inclusive
	20758-15	CXY	MOULDING - Window, left front, light charcoal	1	24-2844 to 24-3557 inclusive
-22	14171-00	VXY	PLATE - Baggage door latch striker	1	
	24218-00	Z	PLATE - Baggage door latch striker	1	
-23	20744-00	XY	PLATE - Cabin door latch striker	1	
	22609-00	VZ	PLATE - Cabin door latch striker	1	
-24	14175-65	X	BUSHING - Cabin door latch striker plate	4	24-1 to 24-3284 inclusive
	14175-65	Y	BUSHING - Cabin door latch striker plate	4	24-105 to 24-2843 inclusive
	22608-00	B	RECEPTACLE ASSEMBLY - Cabin door latch	1	
-25	21271-00	XY	PLATE - Cabin door auxiliary latch striker	1	
	22616-00	VZ	PLATE - Cabin door auxiliary latch striker	1	
-26	20830-00		PIN - Cabin door hinge	2	
-27	760 502	D	KIT - Cabin door holder replacement	1	

A - Used on PA-24-180, PA-24-250 and PA-24-260 with serial numbers 24-1 to 24-4246 inclusive, 24-4248 to 24-4299 inclusive, and PA-24-400 with serial numbers 26-2 and up.
B - Used on PA-24-180 with serial numbers 24-3285 and up, PA-24-250 with serial numbers 24-2844 and up, PA-24-400 and PA-24-260.
C - If Palm Beach Interior is installed, see Figure 8A.
D - If existing door holder incorporates a nylon sliding block, order door holder 27072-03.
V - Used on PA-24-260 airplanes only.
X - Used on PA-24-180 airplanes only.
Y - Used on PA-24-250 airplanes only.
Z - Used on PA-24-400 airplanes only.

Figure and Index Number	Part Number	Code	NOMENCLATURE	No. Req.	SERIAL NUMBERS AFFECTED
10-28	14843-89		BUSHING - Door holder, length 3/16"	1	
	63020-00		BUSHING - Door holder, shouldered	1	
	86102-27		BUSHING - Door holder, length 9/32"	1	
	39994-11		BUSHING - Door holder, length 3/32"	1	
-29	14843-78		BUSHING - Door holder, length 13/64"	1	
-30	86102-27		BUSHING - Door holder, length 9/32"	1	
	63020-00		BUSHING - Door holder, shouldered	1	
	14843-78		BUSHING - Door holder, length 13/64"	1	
	39994-11		BUSHING - Door holder, length 3/32"	1	
-31	14843-99		BUSHING	6	
-32	21741-00		BUSHING - Serrated door hinge, off center	2	
	21741-02		BUSHING - Serrated door hinge, not off center	2	
-33	22075-00	CXY	WINDOW ASSEMBLY - Rear inside, left	1	
	22075-01	CXY	WINDOW ASSEMBLY - Rear inside, right	1	
	20672-02	VZ	WINDOW - Rear inside	2	
-34	22077-00	DXY	WINDOW - Front inside, left	1	24-1689 to 24-2201 inclusive
	24020-00	VZ	WINDOW - Front inside, left	1	
-35	22079-00	DXY	CLIP - Window	22	24-1689 to 24-2201 inclusive
-36	22080-00	DXY	CLIP - Window	2	24-1689 to 24-2201 inclusive
	24019-00	VZ	CLIP - Window	4	
-37	23287-00	EF	CLIP - Stringer support, left	1	
	23287-01	EF	CLIP - Stringer support, right	1	
-38	23289-00	FXY	STRINGER - Window moulding, rear, left	1	24-3558 to 24-3616 inclusive
	23289-01	FXY	STRINGER - Window moulding, rear, right	1	24-3558 to 24-3616 inclusive
-39	23290-00	EF	STRINGER - Window moulding, rear, upper, left	1	
	23290-01	EF	STRINGER - Window moulding, rear, upper, right	1	
-40	23291-02	BF	STRIP - Window retaining, lower, left	1	
	23291-03	BF	STRIP - Window retaining, lower, right	1	
-41	23291-04	BF	STRIP - Window retaining, upper, left	1	
	23291-05	BF	STRIP - Window retaining, upper, right	1	
-42	23293-02	BF	STRIP - Window retaining, upper, left	1	
-43	23293-03	BF	STRIP - Window retaining, lower, left	1	
-44	23295-03	EF	STRIP - Window retaining, front	2	

A - Used on PA-24-180, PA-24-250 and PA-24-260 with serial numbers 24-1 to 24-4246 inclusive, 24-4248 to 24-4299 inclusive, and PA-24-400 with serial numbers 26-2 and up.
B - Used on PA-24-180 and PA-24-250 with serial numbers 24-3558 and up, PA-24-400 and PA-24-260.
C - Optional equipment.
D - Used on PA-24-180 and PA-24-250 with serial numbers 24-1 to 24-1688 if Kit 754 293 has been installed.
E - Used on PA-24-180 and PA-24-250 with serial numbers 24-3558 to 24-3680 inclusive, and PA-24-400 with serial numbers 26-2 to 26-11 inclusive.
F - Used on PA-24-180 and PA-24-250 with serial numbers 24-2844 to 24-3557 if Palm Beach Interior has been installed.
V - Used on PA-24-260 airplanes only.
X - Used on PA-24-180 airplanes only.
Y - Used on PA-24-250 airplanes only.
Z - Used on PA-24-400 airplanes only.

Figure and Index Number	Part Number	Code	NOMENCLATURE	No. Req.	SERIAL NUMBERS AFFECTED
10-45	23297-02	DXY	STRINGER - Window moulding, front, lower, left	1	24-3558 to 24-3616 inclusive
-46	23297-03	DXY	STRINGER - Window moulding, rear, lower, left	1	24-3558 to 24-3616 inclusive
	23297-04	DXY	STRINGER - Window moulding, rear, lower, right	1	24-3558 to 24-3616 inclusive
-47	23313-02	DXY	MOULDING - Window, rear, right, dark brown	1	24-3558 to 24-3616 inclusive
	23313-03	DXY	MOULDING - Window, rear, right, charcoal	1	24-3558 to 24-3616 inclusive
	23313-05	C	MOULDING - Window, rear, right, dark brown	1	
	23313-06	C	MOULDING - Window, rear, right, charcoal	1	
	23313-07	V	MOULDING - Window, rear, right, sand	1	
-48	23314-02	BD	MOULDING - Window, front, right, charcoal	1	
	23314-03	BD	MOULDING - Window, front, right, dark brown	1	
	23314-05	V	MOULDING - Window, front, right, sand	1	
-49	23315-02	DXY	MOULDING - Window, left, charcoal	1	24-3558 to 24-3616 inclusive
	23315-03	DXY	MOULDING - Window, left, dark brown	1	24-3558 to 24-3616 inclusive
	23315-05	C	MOULDING - Window, left, charcoal	1	
	23315-06	C	MOULDING - Window, left, dark brown	1	
	23315-07	V	MOULDING - Window, left, sand	1	
-50	23302-00		WASHER - Retaining, microphone holder	1	
-51	23303-00		HOLDER - Microphone (used with Telephonics Mike RS-38A)	1	
	453 415		BRACKET - Microphone (used with Telex Mike 66C)	1	
-52	24042-00	VZ	STRIP - Window retainer, storm window	1	
-53	85512-12	VZ	STRIP - Window spacer, front, left	1	
-54	85512-13	VZ	STRIP - Window spacer, rear	2	
-55	20680-02	VXY	HINGE ASSEMBLY - Baggage door, upper	1	
	22552-02	Z	HINGE ASSEMBLY - Baggage door, upper	1	
-56	487 542	VXY	STUD - Baggage door hinge	1	
	487 648	Z	STUD - Baggage door hinge	1	
-57	20680-03	VXY	HINGE - Baggage door, lower	1	
	22522-03	Z	HINGE - Baggage door, lower	1	
-58	20670-00	VXY	BRACKET - Baggage door hinge, lower	1	
	20670-01	VXY	BRACKET - Baggage door hinge, upper	1	
	22556-00	Z	BRACKET - Baggage door hinge	2	
-59	480 688		PIN - Roll (#59-012-062-0500)	2	
-60	415 266		SCREW - Center (used with tubular nut)	3	
	415 270		SCREW - Center (used with cap nut)	3	
-61	415 264		SCREW - Upper and lower (used with tubular nut)	2	
	415 266		SCREW - Upper and lower (used with cap nut)	2	

A - Used on PA-24-180, PA-24-250 and PA-24-260 with serial numbers 24-1 to 24-4246 inclusive, 24-4248 to 24-4299 inclusive, and PA-24-400 with serial numbers 26-2 and up.
B - Used on PA-24-180 and PA-24-250 with serial numbers 24-3558 and up, PA-24-400 and PA-24-260.
C - Used on PA-24-180 and PA-24-250 with serial numbers 24-3617 and up, and PA-24-400.
D - Used on PA-24-180 and PA-24-250 with serial numbers 24-2844 to 24-3557 if Palm Beach Interior has been installed.
V - Used on PA-24-260 airplanes only.
X - Used on PA-24-180 airplanes only.
Y - Used on PA-24-250 airplanes only.
Z - Used on PA-24-400 airplanes only.

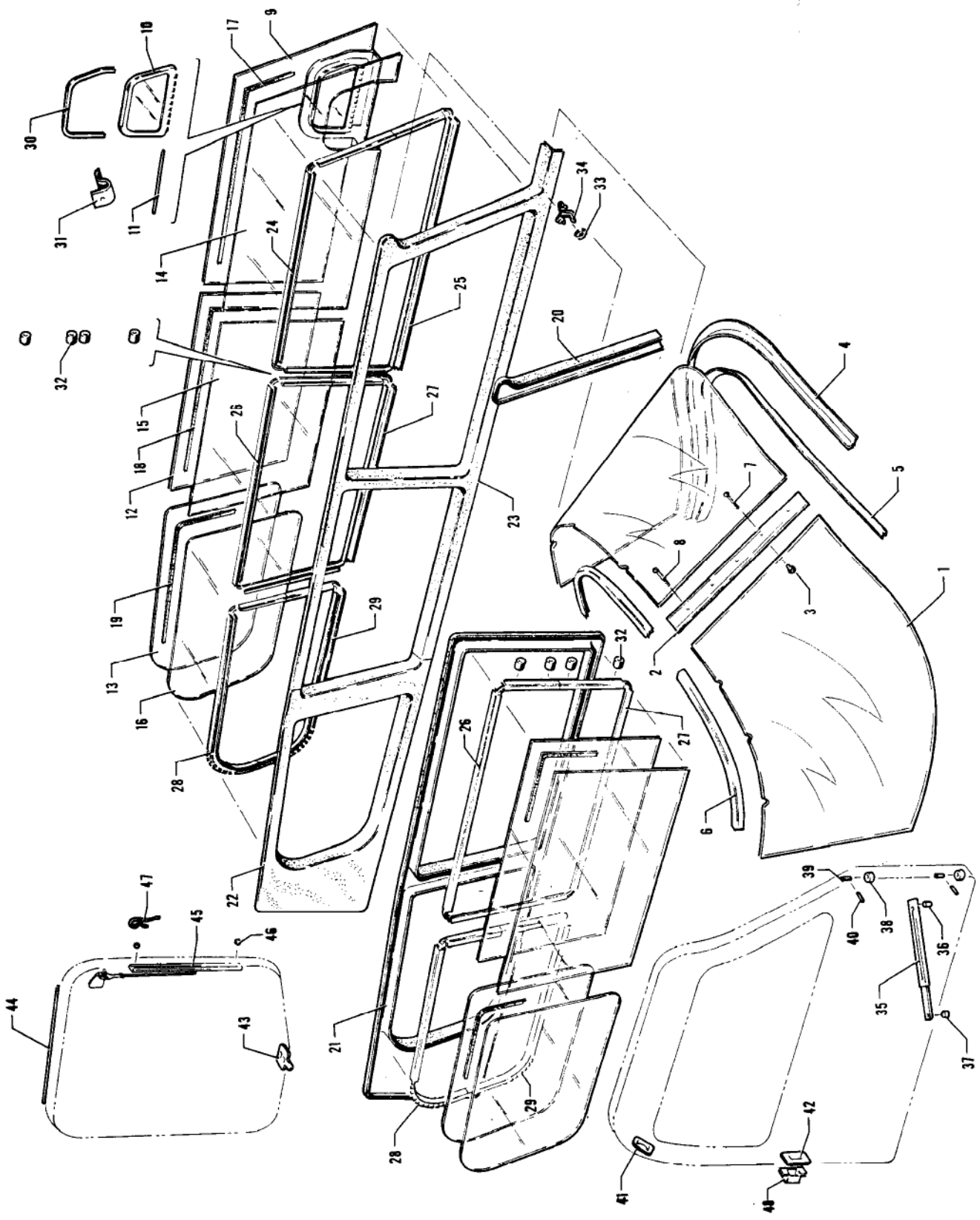

Figure 10A. Fuselage Enclosure Installation

Figure and Index Number	Part Number	Code	NOMENCLATURE	No. Req.	SERIAL NUMBERS AFFECTED
10A-	25525	A	DRAWING - Fuselage Assembly (Complete)		
	26728		DRAWING - Fuselage Assembly (Complete)		24-4783, 24-4804 and up
	20677		DRAWING - Windshield Installation		
	25440	A	DRAWING - Window Installation		
	26782		DRAWING - Window Installation		24-4783, 24-4804 and up
-1	20677-10		WINDSHIELD ASSEMBLY - Left	1	24-4247, 24-4300 to 24-4770
	20677-14		WINDSHIELD ASSEMBLY - Left	1	24-4771 and up
	20677-09		WINDSHIELD ASSEMBLY - Right	1	24-4247, 24-4300 to 24-4770
	20677-13		WINDSHIELD ASSEMBLY - Right	1	24-4771 and up
-2	20715-00		TRIM STRIP - Windshield, center	1	
-3	18359-00		NUT - Tubular	5	
	406 701		NUT - Cap	5	
-4	20677-08		COLLAR - Windshield, outside	1	
-5	20677-05		COLLAR - Windshield, inside	1	
-6	20677-06		ANGLE - Windshield, top, left	1	
	20677-07		ANGLE - Windshield, top, right	1	
-7	415 266		SCREW - Center (used with tubular nut)	3	
	415 270		SCREW - Center (used with cap nut)	3	
-8	415 264		SCREW - Upper and lower (used with tubular nut)	2	
	415 266		SCREW - Upper and lower (used with cap nut)	2	
-9	20676-03		WINDOW - Front, left, outer	1	
-10	21027-00		WINDOW ASSEMBLY - Storm	1	
-11	21025-04		PIN - Storm window hinge	1	
-12	25496-02		WINDOW - Center, left, outer	1	
	25496-03		WINDOW - Center, right, outer	1	
-13	25497-02		WINDOW - Rear, left, outer	1	
	25497-03		WINDOW - Rear, right, outer	1	
-14	24020-00		WINDOW - Front, left, inner	1	
-15	25496-04		WINDOW - Center, inner	2	
-16	25497-04		WINDOW - Rear, inner	2	
-17	85512-12		STRIP - Window spacer, front, left	1	
-18	85512-20		STRIP - Window spacer, center	2	
-19	85512-21		STRIP - Window spacer, rear	2	
-20	23314-06		MOULDING - Window, front, right, beige	1	
	23314-07		MOULDING - Window, front, right, white	1	24-4783, 24-4804 and up
-21	25416-00	A	MOULDING ASSEMBLY - Window, front, right	1	
	26710-06		MOULDING ASSEMBLY - Window, front, right, beige	1	24-4783, 24-4804 and up
	26710-07		MOULDING ASSEMBLY - Window, front, right, white	1	24-4783, 24-4804 and up
-22	25417-00	A	MOULDING - Window, rear, left	1	
	26718-02		MOULDING - Window, rear, left, beige	1	24-4783, 24-4804 and up
	26718-03		MOULDING - Window, rear, left, white	1	24-4783, 24-4804 and up
-23	25418-00	A	MOULDING - Window, front, left	1	
	26668-02		MOULDING - Window, front, left, beige	1	24-4783, 24-4804 and up
	26668-03		MOULDING - Window, front, left, white	1	24-4783, 24-4804 and up
-24	23293-02		STRIP - Front window retaining, upper, left	1	
-25	23293-03		STRIP - Front window retaining, lower, left	1	

A - Used on PA-24-260 with serial numbers 24-4247, 24-4300 to 24-4782, 24-4784 to 24-4803 inclusive.

When ordering, always specify Part Number, Description and Serial Number of Aircraft

Figure and Index Number	Part Number	Code	NOMENCLATURE	No. Req.	SERIAL NUMBERS AFFECTED
10A-26	25414-02		STRIP - Center window retaining, upper, left	1	
	25414-03		STRIP - Center window retaining, upper, right	1	
-27	25414-04		STRIP - Center window retaining, lower, left	1	
	25414-05		STRIP - Center window retaining, lower, right	1	
-28	25415-02		STRIP - Rear window retaining, upper, left	1	
	25415-03		STRIP - Rear window retaining, upper, right	1	
-29	25415-04		STRIP - Rear window retaining, lower, left	1	
	25415-05		STRIP - Rear window retaining, lower, right	1	
-30	24042-00		STRIP - Window retainer, storm window	1	
-31	24019-00		CLIP - Storm window strip	4	
-32	14843-10		BUSHING - Spacer	8	24-4247, 24-4300 to 24-4350
-33	23302-00		WASHER - Retaining, microphone holder	1	
-34	23303-00		HOLDER - Microphone (used with Telephonics mike RS-38A)	1	
	453 415		BRACKET - Microphone (used with Telex mike 66C)	1	
-35	760 502	A	KIT - Cabin door holder replacement	1	24-4247, 24-4300 to 24-4934 incl.
	27072-03		HOLDER ASSEMBLY - Cabin door (with nylon sliding block)	1	24-4935 and up
-36	86102-27		BUSHING - Door holder, front, length 9/32"	1	
	39994-11		BUSHING - Door holder, front, length 3/32"	1	
-37	14843-78		BUSHING - Door holder, rear, length 13/64"	1	
	39994-11		BUSHING - Door holder, rear, length 3/32"	1	
-38	21741-00		BUSHING - Serrated, door hinge, off center	2	
	21741-02		BUSHING - Serrated, door hinge, not off center	2	
-39	20830-00		PIN - Cabin door hinge	2	
-40	480 688		PIN - Roll, door hinge (#59-012-062-0500)	2	
-41	22616-00		PLATE - Cabin door auxiliary latch striker	1	
-42	22609-00		PLATE - Cabin door latch striker	1	
-43	25463-00		PLATE - Baggage door latch striker	1	
-44	81761-58		PIN - Baggage door hinge	1	
-45	30355-00		CHANNEL - Baggage door holder guide	1	
-46	61402-51		BUSHING - Baggage door guide channel	2	
-47	25330-00		SPRING - Baggage door holder retainer	1	
-48	22608-00		RECEPTACLE ASSEMBLY - Cabin door latch	1	

A - If existing door holder incorporates a nylon sliding block, order door holder 27072-03.

When ordering, always specify Part Number, Description and Serial Number of Aircraft

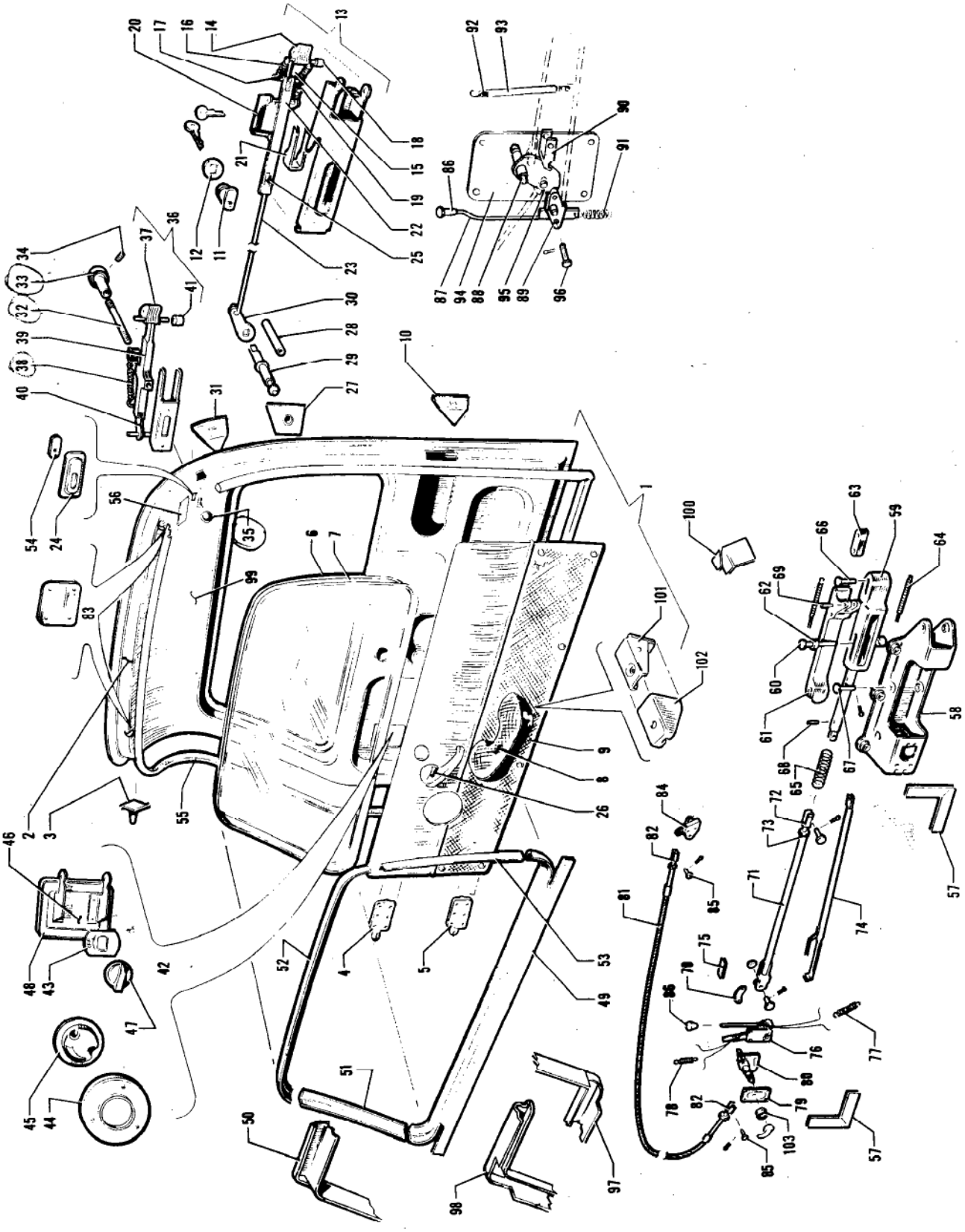

Figure 11. Cabin Door

Figure and Index Number	Part Number	Code	NOMENCLATURE	No. Req.	SERIAL NUMBERS AFFECTED
11-1	20923-02	XY	DOOR ASSEMBLY - Cabin (complete) red	1	24-1 to 24-126 inclusive
	20923-03	XY	DOOR ASSEMBLY - Cabin (complete) blue	1	24-1 to 24-126 inclusive
	20923-04	XY	DOOR ASSEMBLY - Cabin (complete) brown	1	24-1 to 24-126 inclusive
	20923-12	XY	DOOR ASSEMBLY - Cabin (complete) red	1	24-127 to 24-336 inclusive
	20923-13	XY	DOOR ASSEMBLY - Cabin (complete) blue	1	24-127 to 24-336 inclusive
	20923-14	XY	DOOR ASSEMBLY - Cabin (complete) brown	1	24-127 to 24-336 inclusive
	20923-15	XY	DOOR ASSEMBLY - Cabin (complete) red	1	24-337 to 24-1251 inclusive
	20923-16	XY	DOOR ASSEMBLY - Cabin (complete) blue	1	24-337 to 24-1251 inclusive
	20923-17	XY	DOOR ASSEMBLY - Cabin (complete) brown	1	24-337 to 24-1251 inclusive
	20923-18	XY	DOOR ASSEMBLY - Cabin (complete) green	1	24-337 to 24-1251 inclusive
	20923-19	XY	DOOR ASSEMBLY - Cabin (complete) red	1	24-1252 to 24-1476 inclusive
	20923-20	XY	DOOR ASSEMBLY - Cabin (complete) blue	1	24-1252 to 24-1476 inclusive
	20923-21	XY	DOOR ASSEMBLY - Cabin (complete) brown	1	24-1252 to 24-1476 inclusive
	20923-22	XY	DOOR ASSEMBLY - Cabin (complete) green	1	24-1252 to 24-1476 inclusive
	20923-27	XY	DOOR ASSEMBLY - Cabin (complete) red	1	24-1477 to 24-1977 inclusive
	20923-41	AXY	DOOR ASSEMBLY - Cabin (complete) red	1	
	20923-42	XY	DOOR ASSEMBLY - Cabin (complete) red	1	24-2202 to 24-2298 inclusive
	22399-02	XY	DOOR ASSEMBLY - Cabin (complete) red	1	24-2175, 24-2299 to 24-2843
	20923-30	XY	DOOR ASSEMBLY - Cabin (complete) blue	1	24-1477 to 24-1781 inclusive
	20923-33	XY	DOOR ASSEMBLY - Cabin (complete) blue	1	24-1782 to 24-1977 inclusive
	20923-40	AXY	DOOR ASSEMBLY - Cabin (complete) blue	1	
	20923-43	XY	DOOR ASSEMBLY - Cabin (complete) blue	1	24-2202 to 24-2298 inclusive
	22399-05	XY	DOOR ASSEMBLY - Cabin (complete) blue	1	24-2175, 24-2299 to 24-2843
	20923-28	XY	DOOR ASSEMBLY - Cabin (complete) brown	1	24-1477 to 24-1977 inclusive
	20923-31	XY	DOOR ASSEMBLY - Cabin (complete) brown	1	24-1978 to 24-2112 inclusive
	20923-38	DXY	DOOR ASSEMBLY - Cabin (complete) brown	1	
	20923-44	XY	DOOR ASSEMBLY - Cabin (complete) brown	1	24-2202 to 24-2298 inclusive
	22399-03	XY	DOOR ASSEMBLY - Cabin (complete) brown	1	24-2175, 24-2299 to 24-2843
	20923-29	XY	DOOR ASSEMBLY - Cabin (complete) green	1	24-1477 to 24-1734 inclusive, and 24-1827
	20923-32	XY	DOOR ASSEMBLY - Cabin (complete) green	1	24-2135 to 24-1826 inclusive, 24-1828 to 24-1977 inclusive
	20923-39	AXY	DOOR ASSEMBLY - Cabin (complete) green	1	
	20923-45	XY	DOOR ASSEMBLY - Cabin (complete) green	1	24-2202 to 24-2298 inclusive
	22399-04	XY	DOOR ASSEMBLY - Cabin (complete) green	1	24-2175, 24-2299 to 24-2843
	22399-06	BCX	DOOR ASSEMBLY - Cabin (complete)	1	24-2844 to 24-3284 inclusive
	22680-00	BCY	DOOR ASSEMBLY - Cabin (complete)	1	24-2844 to 24-3284 inclusive
	23363-00	BCXY	DOOR ASSEMBLY - Cabin (complete)	1	24-3285 to 24-3557 inclusive
	23364-00	EXY	DOOR ASSEMBLY - Cabin (complete)	1	24-3558 and up
	23885-00	EZ	DOOR ASSEMBLY - Cabin (complete)	1	

A - Used on airplanes with serial numbers 24-1978 to 24-2174, 24-2176 to 24-2201 inclusive.
B - When ordering, specify color brown or silver and airplane serial number.
C - If Palm Beach Interior is installed, see Figure 8A for serial numbers 24-2844 to 24-3557 inclusive.
D - Used on airplanes with serial numbers 24-2113 to 24-2174, 24-2176 to 24-2201 inclusive.
E - When ordering, specify color brown, red or blue.
X - Used on PA-24-180 airplanes only.
Y - Used on PA-24-250 airplanes only.
Z - Used on PA-24-400 airplanes only.

Figure and Index Number	Part Number	Code	NOMENCLATURE	No. Req.	SERIAL NUMBERS AFFECTED
11-1	23885-02	FGV	DOOR ASSEMBLY - Cabin (complete)	1	
	25524-02	BK	DOOR ASSEMBLY - Cabin (complete)	1	
	26687-02	JV	DOOR ASSEMBLY - Cabin (complete)	1	24-4783, 24-4804 and up
-2	20922-00	DXY	DOOR ASSEMBLY - Cabin	1	24-1 to 24-2843 inclusive
	22650-00	EY	DOOR ASSEMBLY - Cabin	1	24-2844 to 24-3284 inclusive
	23360-00	XY	DOOR ASSEMBLY - Cabin	1	24-3285 and up
	23360-06	H	DOOR ASSEMBLY - Cabin	1	
	23360-09	V	DOOR ASSEMBLY - Cabin	1	24-4783, 24-4804 and up
-3	20742-00		PIN ASSEMBLY - Door retainer	1	
-4	20629-01		HINGE - Cabin door, upper	1	
-5	20629-00		HINGE - Cabin door, lower	1	
-6	20923-11		WINDOW - Cabin door, outside	1	
-7	22076-00	XY	WINDOW - Cabin door, inside	1	24-1978 to 24-2201 inclusive
	24117-00	VZ	WINDOW - Cabin door, inside	1	
-8	12799-19	XY	ARMREST ASSEMBLY - Black	1	24-1 to 24-126 inclusive
	12799-27	XY	ARMREST ASSEMBLY - Brown	1	24-1 to 24-126 inclusive
	12799-21	XY	ARMREST ASSEMBLY - Red	1	24-127 to 24-1476 inclusive
	12799-23	XY	ARMREST ASSEMBLY - Blue	1	24-127 to 24-1476 inclusive
	12799-25	XY	ARMREST ASSEMBLY - Brown	1	24-127 to 24-1476 inclusive
	12799-35	XY	ARMREST ASSEMBLY - Green	1	24-337 to 24-1476 inclusive
	12799-39	AXY	ARMREST ASSEMBLY - Red	1	
	12799-40	AXY	ARMREST ASSEMBLY - Blue	1	
	12799-41	XY	ARMREST ASSEMBLY - Brown	1	24-1477 to 24-2843 inclusive
	12799-42	XY	ARMREST ASSEMBLY - Green	1	24-1477 to 24-2843 inclusive
	12799-49	XY	ARMREST ASSEMBLY - Red	1	24-2175, 24-2299 to 24-2843
	12799-50	XY	ARMREST ASSEMBLY - Blue	1	24-2175, 24-2299 to 24-2843
	22944-02	CXY	ARMREST ASSEMBLY - Silver	1	24-2844 to 24-3557 inclusive
	22944-03	CXY	ARMREST ASSEMBLY - Tan	1	24-2844 to 24-3557 inclusive

A - Used on airplanes with serial numbers 24-1477 to 24-2174, 24-2176 to 24-2298 inclusive.
B - When ordering, specify color red, blue, brown, gold or black.
C - If Palm Beach Interior is installed, see Figure 8A for serial numbers 24-2844 to 24-3557 inclusive.
D - Used on PA-24-180 airplanes with serial numbers 24-2844 to 24-3284 inclusive.
E - If lock knob is 11-1/2" from forward edge of door, order part for serial numbers 24-3285 and up.
F - When ordering, specify color brown, red or blue.
G - Used on PA-24-260 with serial numbers 24-3642, 24-4000 to 24-4246 inclusive, 24-4248 to 24-4299 inclusive.
H - Used on PA-24-260 with serial numbers 24-3642, 24-4000 to 24-4782, 24-4784 to 24-4803 inclusive, and PA-24-400 airplanes.
J - When ordering, specify color red, blue, white, black or gold.
K - Used on PA-24-260 with serial numbers 24-4247, 24-4300 to 24-4782, 24-4784 to 24-4803 inclusive.
V - Used on PA-24-260 airplanes only.
X - Used on PA-24-180 airplanes only.
Y - Used on PA-24-250 airplanes only.
Z - Used on PA-24-400 airplanes only.

Figure and Index Number	Part Number	Code	NOMENCLATURE	No. Req.	SERIAL NUMBERS AFFECTED
11-8	23463-10	XYZ	ARMREST ASSEMBLY - Sand	1	24-3558 and up, 26-2 and up
	23463-11	AB	ARMREST ASSEMBLY - Red	1	
	23463-12	AB	ARMREST ASSEMBLY - Blue	1	
	23463-22	AV	ARMREST ASSEMBLY - Russet	1	
	25481-03	C	ARMREST ASSEMBLY - Vinyl, red	1	
	25481-07	C	ARMREST ASSEMBLY - Vinyl, brown	1	
	25481-05	V	ARMREST ASSEMBLY - Vinyl, blue	1	24-4247, 24-4300 and up
	25481-19	V	ARMREST ASSEMBLY - Vinyl, black	1	24-4247, 24-4300 and up
	25481-23	V	ARMREST ASSEMBLY - Vinyl, red	1	24-4783, 24-4804 and up
	25481-35	V	ARMREST ASSEMBLY - Vinyl, gold	1	24-4783, 24-4804 and up
	25481-09	V	ARMREST ASSEMBLY - Leather, gold	1	24-4247, 24-4300 and up
	25481-27	V	ARMREST ASSEMBLY - Leather, red	1	24-4783, 24-4804 and up
	25481-31	V	ARMREST ASSEMBLY - Leather, blue	1	24-4783, 24-4804 and up
	25481-39	V	ARMREST ASSEMBLY - Leather, black	1	24-4783, 24-4804 and up
-9	20918-08	XY	PANEL ASSEMBLY - Door, lower, red	1	24-1 to 24-126 inclusive
	20918-09	XY	PANEL ASSEMBLY - Door, lower, blue	1	24-1 to 24-126 inclusive
	20918-10	XY	PANEL ASSEMBLY - Door, lower, brown	1	24-1 to 24-126 inclusive
	21729-02	XY	PANEL ASSEMBLY - Door, lower, red	1	24-127 to 24-336 inclusive
	21729-03	XY	PANEL ASSEMBLY - Door, lower, blue	1	24-127 to 24-336 inclusive
	21729-04	XY	PANEL ASSEMBLY - Door, lower, brown	1	24-127 to 24-336 inclusive
	21729-14	XY	PANEL ASSEMBLY - Door, lower, red	1	24-337 to 24-1251 inclusive
	21729-15	XY	PANEL ASSEMBLY - Door, lower, blue	1	24-337 to 24-1251 inclusive
	21729-16	XY	PANEL ASSEMBLY - Door, lower, brown	1	24-337 to 24-1251 inclusive
	21729-17	XY	PANEL ASSEMBLY - Door, lower, green	1	24-337 to 24-1251 inclusive
	21915-07	XY	PANEL ASSEMBLY - Door, lower, red	1	24-1252 to 24-1476 inclusive
	21915-08	XY	PANEL ASSEMBLY - Door, lower, blue	1	24-1252 to 24-1476 inclusive
	21915-09	XY	PANEL ASSEMBLY - Door, lower, brown	1	24-1252 to 24-1476 inclusive
	21915-10	XY	PANEL ASSEMBLY - Door, lower, green	1	24-1252 to 24-1476 inclusive
	21992-02	XY	PANEL ASSEMBLY - Door, lower, red	1	24-1477 to 24-1977 inclusive
	21992-05	XY	PANEL ASSEMBLY - Door, lower, blue	1	24-1477 to 24-1781 inclusive
	21992-03	XY	PANEL ASSEMBLY - Door, lower, brown	1	24-1477 to 24-2112 inclusive
	21992-04	XY	PANEL ASSEMBLY - Door, lower, green	1	24-1477 to 24-1734 inclusive, and 24-1827
	22068-02	XY	PANEL ASSEMBLY - Door, lower, red	1	24-1978 to 24-2174 inclusive, 24-2176 to 24-2201 inclusive
	22116-02	XY	PANEL ASSEMBLY - Door, lower, red	1	24-2202 to 24-2298 inclusive
	22394-02	XY	PANEL ASSEMBLY - Door, lower, red	1	24-2175, 24-2299 to 24-2843
	22068-18	XY	PANEL ASSEMBLY - Door, lower, blue	1	24-1782 to 24-2174 inclusive, 24-2176 to 24-2201 inclusive
	22116-05	XY	PANEL ASSEMBLY - Door, lower, blue	1	24-2202 to 24-2298 inclusive
	22394-05	XY	PANEL ASSEMBLY - Door, lower, blue	1	24-2175, 24-2299 to 24-2843

A - Used on PA-24-260 with serial numbers 24-3642, 24-4000 to 24-4246 inclusive, 24-4248 to 24-4299 inclusive.
B - Used on PA-24-180 and PA-24-250 with serial numbers 24-3558 and up, and PA-24-400 with serial numbers 26-2 and up.
C - Used on PA-24-260 with serial numbers 24-4247, 24-4300 to 24-4782, 24-4784 to 24-4803 inclusive.
V - Used on PA-24-260 airplanes only.
X - Used on PA-24-180 airplanes only.
Y - Used on PA-24-250 airplanes only.
Z - Used on PA-24-400 airplanes only.

Figure and Index Number	Part Number	Code	NOMENCLATURE	No. Req.	SERIAL NUMBERS AFFECTED
11-9	22068-16	CXY	PANEL ASSEMBLY - Door, lower, brown	1	
	22116-03	XY	PANEL ASSEMBLY - Door, lower, brown	1	24-2202 to 24-2298 inclusive
	22394-03	XY	PANEL ASSEMBLY - Door, lower, brown	1	24-2175, 24-2299 to 24-2843
	22068-17	XY	PANEL ASSEMBLY - Door, lower, green	1	24-1735 to 24-1826 inclusive, 24-1828 to 24-1977 inclusive
	22116-04	JXY	PANEL ASSEMBLY - Door, lower, green	1	
	22394-04	XY	PANEL ASSEMBLY - Door, lower, green	1	24-2175, 24-2299 to 24-2843
	23016-02	EFX	PANEL ASSEMBLY - Door, lower	1	24-2844 to 24-3284 inclusive
	23016-00	EFX	PANEL ASSEMBLY - Door, lower	1	24-3285 to 24-3557 inclusive
	23016-00	EFY	PANEL ASSEMBLY - Door, lower	1	24-2844 to 24-3557 inclusive
	23270-06	XY	PANEL ASSEMBLY - Door, lower, brown	1	24-3558 and up
	23270-13	AXY	PANEL ASSEMBLY - Door, lower	1	24-3558 and up
	23270-09	Z	PANEL ASSEMBLY - Door, lower, sand	1	
	23270-14	AZ	PANEL ASSEMBLY - Door, lower	1	
	24871-00	GHV	PANEL ASSEMBLY - Door, lower	1	
	25510-00	DV	PANEL ASSEMBLY - Door, lower	1	24-4247, 24-4300 to 24-4782, 24-4784 to 24-4803 inclusive
	26679-00	KV	PANEL ASSEMBLY - Door, lower	1	24-4783, 24-4804 and up
-10	21235-00	B	PLATE - Door latch trim	1	

A - Specify color red or blue when ordering.
B - Not used on PA-24-250 with serial numbers 24-2844 and up, PA-24-180 with serial numbers 24-3285 and up, PA-24-400 or PA-24-260 airplanes.
C - Used on airplanes with serial numbers 24-2113 to 24-2174, 24-2176 to 24-2201 inclusive.
D - When ordering, specify color red, blue, brown, gold or black.
E - Specify color tan or gray when ordering.
F - If Palm Beach Interior is installed, see Figure 8A for serial numbers 24-2844 to 24-3557 inclusive.
G - When ordering, specify color red, blue or russet.
H - Used on PA-24-260 with serial numbers 24-3642, 24-4000 to 24-4246, 24-4248 to 24-4299 inclusive.
J - Used on airplanes with serial numbers 24-1978 to 24-2174, 24-2176 to 24-2298 inclusive.
K - When ordering, specify color red, blue, white, black or gold.
V - Used on PA-24-260 airplanes only.
X - Used on PA-24-180 airplanes only.
Y - Used on PA-24-250 airplanes only.
Z - Used on PA-24-400 airplanes only.

Figure and Index Number	Part Number	Code	NOMENCLATURE	No. Req.	SERIAL NUMBERS AFFECTED
11-11	752 349	CXY	LOCK KIT - Door (with 2 keys)	1	24-1 to 24-2843 inclusive
	752 349	CX	LOCK KIT - Door (with 2 keys)	1	24-2844 to 24-3284 inclusive
	752 350	BE	LOCK KIT - Door (with 2 keys)	1	
-12	21176-00	B	SPACER - Door lock	2	
-13	754 216	XY	LATCH ASSEMBLY - Cabin door	1	24-1 to 24-640 inclusive
	20807-00	B	LATCH ASSEMBLY - Cabin door	1	24-641 to 24-3284 inclusive
-14	14634-00	B	TONGUE ASSEMBLY - Door latch	1	
-15	81262-68	B	LINK - Door latch	1	
-16	14635-02	B	SPRING - Door latch	2	
-17	14627-03	B	PIN - Door latch tongue	1	
-18	14843-90	B	BUSHING - Door latch tongue spacer	1	
-19	83302-43	B	SPRING - Door latch	1	
-20	21172-02	B	PLATE - Door latch, outside	1	
-21	21826-00	B	PLATE - Door latch stop	1	
-22	21169-00	B	PLATE ASSEMBLY - Door latch pull rod	1	
-23	20620-00	B	ROD - Door latch pull	1	
-24	21475-00	B	PLATE - Seal retaining	1	
-25	80122-05	B	WASHER	1	
-26	464 022	D	HANDLE - Door, inside, 80A-1	1	
	464 031	V	HANDLE - Door, inside (#1H-287)	1	24-4783, 24-4804 and up
-27	21375-00	B	PLATE ASSEMBLY - Inside door handle	1	
-28	14843-70	B	BUSHING - Inside door handle	1	
-29	20743-00	B	SHAFT - Inside door handle	1	
-30	20747-00	B	LINK - Inside door handle	1	
-31	21208-00	B	PLATE - Auxiliary door latch trim	1	
-32	21476-02	AB	STUD - Auxiliary door latch	1	
-33	21209-00	B	KNOB - Auxiliary door latch release	1	

A - If Palm Beach Interior is installed, see Figure 8A for serial numbers 24-2844 to 24-3557 inclusive.

B - Not used on PA-24-250 with serial numbers 24-2844 and up, PA-24-180 with serial numbers 24-3285 and up, PA-24-400 or PA-24-260 airplanes.

C - If matching switch and locks are desired, order Kit 487 801 for all PA-24-250 airplanes with serial numbers 24-1 to 24-2201 and for all PA-24-180 airplanes with serial numbers 24-1 to 24-2174, 24-2176 to 24-2298. Order Kit 470 655 for all PA-24-250 airplanes with serial numbers 24-2202 to 24-2843 and for all PA-24-180 airplanes with serial numbers 24-2175, 24-2299 to 24-3284 inclusive.

D - Used on PA-24-180 and PA-24-250 with serial numbers 24-1 to 24-3558 and up, PA-24-260 with serial numbers 24-3642, 24-4000 to 24-4782 inclusive, 24-4784 to 24-4803 inclusive, and PA-24-400 with serial numbers 26-2 and up.

E - If matching switch, baggage and door locks are desired, order Part No. 25163-06. If matching baggage and door locks are desired, order Part No. 25163-05.

V - Used on PA-24-260 airplanes only.

X - Used on PA-24-180 airplanes only.

Y - Used on PA-24-250 airplanes only.

PILOTEN-SERVICE
Straubing LBA II-A-170
Telefon (09421) 715

Figure and Index Number	Part Number	Code	NOMENCLATURE	No. Req.	SERIAL NUMBERS AFFECTED
11-34	419 973	B	SCREW - Socket set (#8-32 x 9/32" L)	1	
-35	471 080	B	KNOB - Tee (KN578A)	1	
-36	754 227	E	LATCH ASSEMBLY - Auxiliary door	1	24-1 to 24-987 inclusive
	21881-00	B	LATCH ASSEMBLY - Auxiliary door	1	24-988 to 24-3284 inclusive
(37)	14634-00	B	TONGUE ASSEMBLY - Door latch	1	
(38)	14635-00	B	SPRING - Door latch	2	
-39	754 228	BD	LINK - Auxiliary door latch	1	24-1 to 24-987 inclusive
	21212-02	B	LINK - Auxiliary door latch	1	24-988 to 24-3284 inclusive
-40	81262-74	B	LINK - Auxiliary door latch	1	
-41	82732-75	B	BUSHING - Auxiliary door latch	1	
-42	754 203	XY	KIT - Ventilator box assembly, black (21160-00)	1	
-43	21257-00	XY	PLACARD - Ventilator control knob, black	1	24-1 to 24-1476 inclusive
	21257-02	XY	PLACARD - Ventilator control knob, gray	1	24-1477 to 24-2843 inclusive
	21257-03	AXY	PLACARD - Ventilator control knob, tan	1	24-2844 to 24-3557 inclusive
	21257-04	AXY	PLACARD - Ventilator control knob, dark brown	1	24-2844 and up
	21257-07	XY	PLACARD - Ventilator control knob, red	1	24-3558 and up
	21257-08	XY	PLACARD - Ventilator control knob, blue	1	24-3558 and up
-44	21156-00	XY	PLATE - Ventilator air deflector	1	
-45	21154-00	XY	DEFLECTOR - Ventilator air, black	1	24-1 to 24-1476 inclusive
	21154-02	XY	DEFLECTOR - Ventilator air, gray	1	24-1477 to 24-2843 inclusive
	21154-03	AXY	DEFLECTOR - Ventilator air, dark brown	1	24-2844 and up
	21154-04	AXY	DEFLECTOR - Ventilator air, light charcoal	1	24-2844 and up
-46	21159-00	XY	DOOR ASSEMBLY - Ventilator	1	
-47	754 181	AXY	KNOB - Vent box, black	1	24-1 to 24-1476 inclusive
	471 079	AXY	KNOB - Vent box, gray	1	24-1477 to 24-2843 inclusive
	471 095	AXY	KNOB - Vent box, brown	1	24-2844 and up
	471 096	AXY	KNOB - Vent box, charcoal	1	24-2844 to 24-3557 inclusive
	23459-00	XY	KNOB - Vent box, red	1	24-3558 and up
-48	21407-00	BXY	SEAL - Vent box door	1	
-49	20923-05	XY	TRIM STRIP - Cabin door window, bottom	1	24-1 to 24-1251 inclusive
	21916-00	XY	TRIM STRIP - Cabin door window, bottom	1	24-1252 to 24-2843 inclusive
	20923-05	AX	TRIM STRIP - Cabin door window, bottom	1	24-2844 to 24-3284 inclusive
	23241-00	ACY	TRIM STRIP - Cabin door window, bottom	1	24-2844 to 24-3284 inclusive
	23241-02	A	TRIM STRIP - Cabin door window, bottom	1	24-3285 to 24-3557 inclusive

A - If Palm Beach Interior is installed, see Figure 8A for serial numbers 24-2844 to 24-3557 inclusive.
B - Not used on PA-24-250 with serial numbers 24-2844 and up, PA-24-180 with serial numbers 24-3285 and up, PA-24-400 or PA-24-260 airplanes.
C - These parts are for door if lock knob is 14-1/2" from forward edge of door. If lock knob is 11-1/2" from forward edge of door, order parts for serial numbers 24-3285 and up.
D - Use link, Part No. 21212-02, if Kit 754 227 has been installed.
E - Use latch, Part No. 21881-00, if Kit 754 227 has been installed.
X - Used on PA-24-180 airplanes only.
Y - Used on PA-24-250 airplanes only.

Figure and Index Number	Part Number	Code	NOMENCLATURE	No. Req.	SERIAL NUMBERS AFFECTED
11-50	23308-02	EF	MOULDING - Cabin door window, complete, charcoal	1	
	23308-03	EF	MOULDING - Cabin door window, complete, dark brown	1	
	23308-05	FV	MOULDING - Cabin door window, complete, sand	1	
	23308-06	V	MOULDING - Cabin door window, complete, beige	1	24-4247, 24-4300 to 24-4782, 24-4784 to 24-4803 inclusive
	26677-02	V	MOULDING - Cabin door window, beige	1	24-4783, 24-4804 and up
	26677-03	V	MOULDING - Cabin door window, beige	1	24-4783, 24-4804 and up
-51	20923-06	AXY	TRIM STRIP - Cabin door window, front	1	24-1 to 24-3557 inclusive
-52	20923-08	AXY	TRIM STRIP - Cabin door window, top	1	24-1 to 24-3557 inclusive
-53	20923-10	AXY	TRIM STRIP - Cabin door window, rear	1	24-1 to 24-3557 inclusive
-54	21474-00	B	SEAL ASSEMBLY - Auxiliary door latch	1	
-55	19063-02		MOULDING - Door seal	12'	
-56	21785-00	B	PLACARD - Door latch, black	1	
	21785-02	B	PLACARD - Door latch, gray	1	
	21785-03	B	PLACARD - Door latch, dark brown	1	
-57	23105-00	Y	SHIM - Door	2	24-2844 to 24-3284 inclusive
-58	22840-00	CY	LATCH ASSEMBLY - Door	1	24-2844 to 24-3284 inclusive
	22840-02		LATCH ASSEMBLY - Door	1	24-3285 and up, 26-2 and up
-59	22679-00	CY	LATCH	1	24-2844 to 24-3284 inclusive
	22679-04		LATCH	1	24-3285 and up, 26-2 and up
-60	22676-00	D	PIN	1	
-61	22641-00	D	HANDLE	1	
-62	14976-68	D	BUSHING	2	
-63	60054-14	D	LINK	5	
-64	83302-47	D	SPRING	2	
-65	83302-48	D	SPRING	1	
-66	424 184	D	PIN - Flat head (AN393-31)	1	
-67	424 182	D	PIN - Flat head (AN393-27)	1	
-68	480 683	D	PIN - Roll (#59-028-125-0678)	1	
-69	480 706	D	PIN - Roll (#59-022-094-0500)	2	
-70	19941-00		PLACARD - Door lock	1	

A - If Palm Beach Interior is installed, see Figure 8A for serial numbers 24-2844 to 24-3557 inclusive.
B - Not used on PA-24-250 with serial numbers 24-2844 and up, PA-24-180 with serial numbers 24-3285 and up, PA-24-400 or PA-24-260 airplanes.
C - These parts are for door if lock knob is 14-1/2" from forward edge of door. If lock knob is 11-1/2" from forward edge of door, order parts for serial numbers 24-3285 and up.
D - Used on PA-24-250 with serial numbers 24-2844 and up, PA-24-180 with serial numbers 24-3285 and up, PA-24-400 and PA-24-260 airplanes.
E - Used on PA-24-180 and PA-24-250 with serial numbers 24-3558 and up, PA-24-400 with serial numbers 26-2 and up.
F - Used on PA-24-260 with serial numbers 24-3642, 24-4000 to 24-4246, 24-4248 to 24-4299 inclusive.
V - Used on PA-24-260 airplanes only.
X - Used on PA-24-180 airplanes only.
Y - Used on PA-24-250 airplanes only.

Figure and Index Number	Part Number	Code	NOMENCLATURE	No. Req.	SERIAL NUMBERS AFFECTED
11-71	22648-00	CY	TUBE ASSEMBLY - Door latch	1	24-2844 to 24-3284 inclusive
	23354-00		TUBE ASSEMBLY - Door latch	1	24-3285 and up, 26-2 and up
-72	16514-00	B	CLEVIS	1	
-73	404 332	B	NUT - (AN316-4R)	1	
-74	23232-00	CY	TUBE ASSEMBLY - Door lock release	1	24-2844 to 24-3284 inclusive
	23356-00		TUBE ASSEMBLY - Door lock release	1	24-3285 and up, 26-2 and up
-75	23240-00	B	PLACARD	1	
-76	23238-00	ACY	LOCK ASSEMBLY - Door	1	24-2844 to 24-3284 inclusive
-77	14635-02	CY	SPRING	1	24-2844 to 24-3284 inclusive
-78	83302-51	CY	SPRING	1	24-2844 to 24-3284 inclusive
-79	22643-00	CY	PLATE - Door handle shaft retainer	1	24-2844 to 24-3284 inclusive
-80	22639-00	CY	SHAFT ASSEMBLY - Door handle	1	24-2844 to 24-3284 inclusive
-81	22860-02	B	CABLE ASSEMBLY	1	
-82	554 757	B	CLEVIS - (MS35812-1)	2	
-83	11199-06	B	PLATE - Cover	1	
-84	22615-00	B	ARM ASSEMBLY - Door lock	1	
-85	424 176	B	PIN - Flat head (MS20392-2C15)	2	
-86	31193-02	EXY	KNOB - Door lock, tan (471 091)	1	
	31193-03	EXY	KNOB - Door lock, gray (471 092)	1	
	24567-00		KNOB - Door lock, aluminum	1	24-3594 and up, 26-2 and up
-87	23350-02	XY	ROD ASSEMBLY - Door lock release	1	24-3285 to 24-3557 inclusive
	23350-03		ROD ASSEMBLY - Door lock release	1	24-3558 and up, 26-2 and up
-88	23346-00	GXY	SHAFT ASSEMBLY - Door handle	1	
	23346-04	DH	SHAFT ASSEMBLY - Door handle	1	
	26781-00	V	SHAFT ASSEMBLY - Door handle	1	24-4783, 24-4804 and up
-89	23353-00	GXY	SHAFT ASSEMBLY - Latch plate	1	
	23353-04	D	SHAFT ASSEMBLY - Latch plate	1	
-90	23552-00	FH	STOP ASSEMBLY - Door handle	1	

A - If Palm Beach Interior is installed, see Figure 8A for serial numbers 24-2844 to 24-3557 inclusive.
B - Used on PA-24-250 with serial numbers 24-2844 and up, PA-24-180 with serial numbers 24-3285 and up, PA-24-400 and PA-24-260 airplanes.
C - These parts are for door if lock knob is 14-1/2" from forward edge of door. If lock knob is 11-1/2" from forward edge of door, order parts for serial numbers 24-3285 and up.
D - Used on PA-24-180 and PA-24-250 with serial numbers 24-3558, 24-3590 to 24-3592, 24-3595, 24-3597 and up, PA-24-400 and PA-24-260 airplanes.
E - Used on PA-24-250 with serial numbers 24-2844 to 24-3593 and PA-24-180 with serial numbers 24-3285 to 24-3293 inclusive.
F - Used on PA-24-180 and PA-24-250 with serial numbers 24-3285 and up, PA-24-400 and PA-24-260 airplanes.
G - Used on PA-24-180 and PA-24-250 with serial numbers 24-3285 to 24-3587, 24-3589, 24-3593, 24-3594 and 24-3596.
H - Used on PA-24-260 with serial numbers 24-3642, 24-4000 to 24-4782, 24-4784 to 24-4803 inclusive.
V - Used on PA-24-260 airplanes only.
X - Used on PA-24-180 airplanes only.
Y - Used on PA-24-250 airplanes only.

Figure and Index Number	Part Number	Code	NOMENCLATURE	No. Req.	SERIAL NUMBERS AFFECTED
11-91	83302-53	C	SPRING	1	
-92	83302-53	C	SPRING	1	
-93	90797-90	C	SLEEVE	1	
-94	23349-00	BC	PLATE - Door handle shaft retainer	1	
	23349-02	V	PLATE - Door handle shaft retainer	1	24-4783, 24-4804 and up
-95	424 176	C	PIN - Flat head (MS20392-2C15)	1	
	407 564	C	WASHER - (AN960-10)	1	
	424 051	C	PIN - Cotter (MS24665-132)	1	
-96	424 144	C	PIN - Flat head (MS20392-1C15)	1	
	407 562	C	WASHER - (AN960-6)	1	
	424 051	C	PIN - Cotter (MS24665-132)	1	
-97	23294-02		STRIP - Window retaining, bottom	1	24-3558 and up, 26-2 and up
-98	23294-03		STRIP - Window retaining, top	1	24-3558 and up, 26-2 and up
-99	21995-00	XY	PANEL ASSEMBLY - Door, upper, white	1	
	23027-00	AXY	PANEL ASSEMBLY - Door, upper	1	
	21995-05	XYZ	PANEL ASSEMBLY - Door, upper, sand	1	
	21995-06	XYZ	PANEL ASSEMBLY - Door, upper, gray	1	
	21995-07	DV	PANEL ASSEMBLY - Door, upper, beige	1	
	21995-08	V	PANEL ASSEMBLY - Door, upper, beige	1	24-4247, 24-4300 to 24-4782, 24-4784 to 24-4803 inclusive
	21995-09	V	PANEL ASSEMBLY - Door, upper, beige	1	24-4783, 24-4804 and up
	21995-10	V	PANEL ASSEMBLY - Door, upper, white	1	24-4783, 24-4804 and up
-100	24164-00		BRACKET - Door trim reinforcing	2	24-3558 and up, 26-2 and up
-101	25283-00	V	BRACKET ASSEMBLY - Armrest support	2	24-4247, 24-4300 and up
-102	25281-00	V	COVER - Armrest support bracket, beige	2	24-4247, 24-4300 and up
	25281-02	V	COVER - Armrest support bracket, black	2	24-4247, 24-4300 to 24-4782, 24-4784 to 24-4803 inclusive
	25281-03	V	COVER - Armrest support bracket, white	2	24-4783, 24-4804 and up
-103	25590-00	V	WASHER - Door lock trim	1	24-4247, 24-4300 and up

A - Specify color silver or brown when ordering.
B - Used on PA-24-260 with serial numbers 24-3642, 24-4000 to 24-4782, 24-4784 to 24-4803 inclusive.
C - Used on PA-24-180 and PA-24-250 with serial numbers 24-3285 and up, PA-24-400 and PA-24-260 airplanes.
D - Used on PA-24-260 with serial numbers 24-3642, 24-4000 to 24-4246, 24-4248 to 24-4299 inclusive.
V - Used on PA-24-260 airplanes only.
X - Used on PA-24-180 airplanes only.
Y - Used on PA-24-250 airplanes only.
Z - Used on PA-24-400 airplanes only.

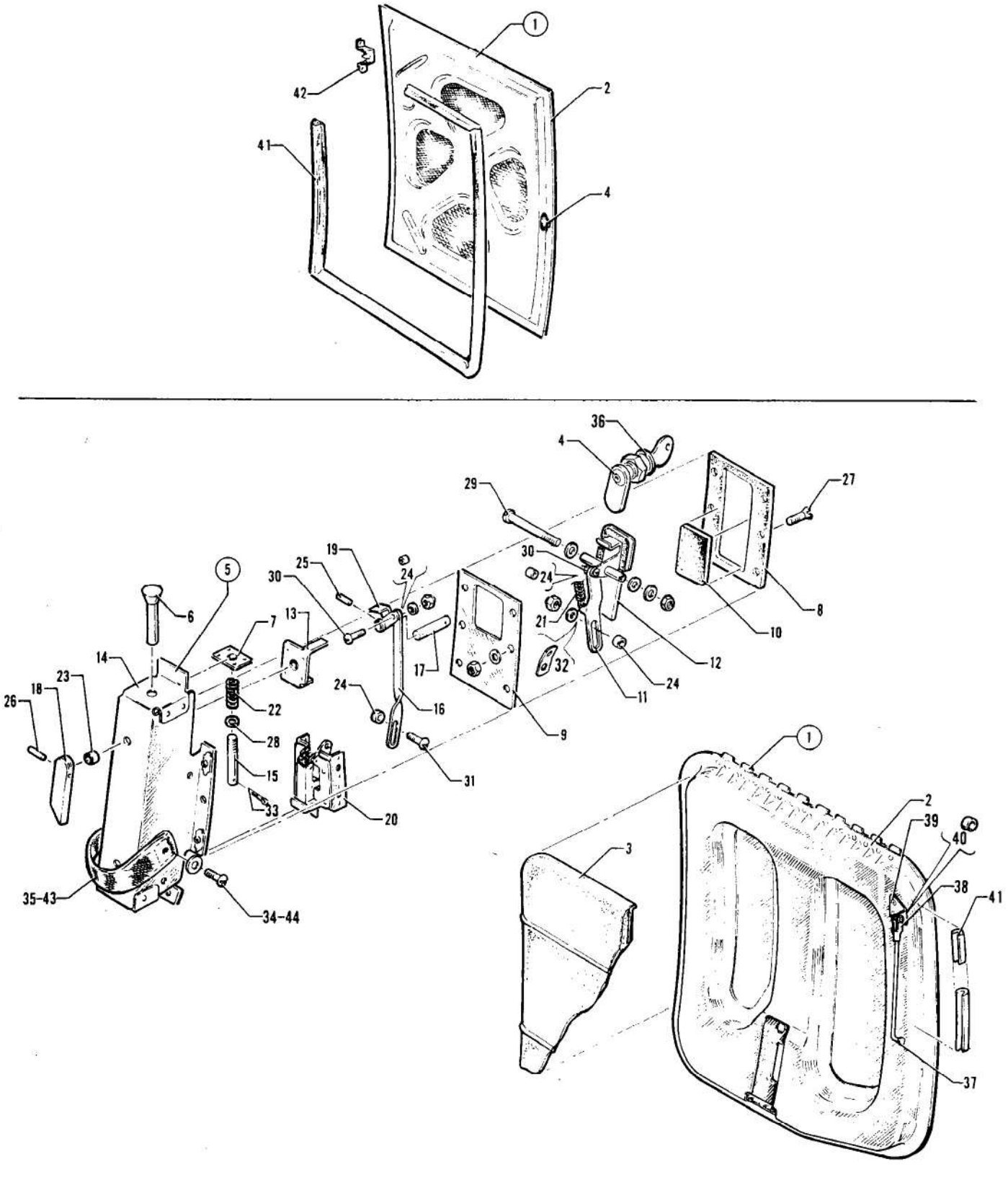

Figure 11A. Baggage Compartment Door Assembly

Figure and Index Number	Part Number	Code	NOMENCLATURE	No. Req.	SERIAL NUMBERS AFFECTED
11A-1	20706-00	X	DOOR ASSEMBLY - Baggage compartment (complete)	1	24-1 to 24-102 inclusive
	20706-04	XY	DOOR ASSEMBLY - Baggage compartment (complete)	1	24-103 and up
	23184-02	Z	DOOR ASSEMBLY - Baggage compartment (complete)	1	
	20706-04	A	DOOR ASSEMBLY - Baggage compartment (complete)	1	
	25509-00	BV	DOOR ASSEMBLY - Baggage compartment (complete)	1	24-4247, 24-4300 to 24-4782, 24-4784 to 24-4803 inclusive
	26724-02	EV	DOOR ASSEMBLY - Baggage compartment (complete)	1	24-4783, 24-4804 and up
-2	20705-00	XY	DOOR ASSEMBLY - Baggage compartment	1	
	22570-00	Z	DOOR ASSEMBLY - Baggage compartment	1	
	20705-00	A	DOOR ASSEMBLY - Baggage compartment	1	
	25506-00	V	DOOR ASSEMBLY - Baggage compartment	1	24-4248, 24-4300 and up
-3	25508-00	BV	PANEL ASSEMBLY - Baggage compartment door	1	24-4247, 24-4300 to 24-4782, 24-4784 to 24-4803 inclusive
	26758-00	EV	PANEL ASSEMBLY - Baggage compartment door	1	24-4783, 24-4804 and up
-4	752 349	CD	LOCK KIT - Door (with 2 keys)	1	
-5	25489-00	V	LATCH ASSEMBLY - Baggage door (complete)	1	24-4247, 24-4300 and up
-6	24567-02	V	KNOB - Door lock (1 1/16" long)	1	24-4247, 24-4300 to 24-4538
	25782-00	V	KNOB - Door lock (2 1/4" long)	1	24-4539 and up
-7	25425-00	V	BEARING ASSEMBLY - Door locking arm shaft	1	24-4247, 24-4300 and up
-8	25428-00	V	PLATE - Baggage door, latch spacer	1	24-4247, 24-4300 and up
-9	25429-00	V	PLATE - Baggage door, latch spacer	1	24-4247, 24-4300 and up
-10	25432-00	V	SEAL - Baggage door, latch	1	24-4247, 24-4300 and up
-11	25437-00	V	LINK - Baggage door, latch	1	24-4247, 24-4300 and up
-12	25438-00	V	HANDLE ASSEMBLY - Baggage door, latch	1	24-4247, 24-4300 and up
-13	25444-00	V	BEARING ASSEMBLY - Inside handle, shaft	1	24-4247, 24-4300 and up
-14	25447-00	V	COVER ASSEMBLY - Baggage door, latch	1	24-4247, 24-4300 and up
-15	25448-00	V	SHAFT - Door, locking knob	1	24-4247, 24-4300 to 24-4538
-16	25456-00	V	LINK - Baggage door, inside handle	1	24-4247, 24-4300 and up
-17	25457-00	V	ROD - Baggage door, inside handle	1	24-4247, 24-4300 and up

A - Used on PA-24-260 with serial numbers 24-3642, 24-4000 to 24-4246, 24-4248 to 24-4299 inclusive.
B - When ordering, specify color red, blue, black or gold.
C - If matching switch and locks are desired, order Kit 487 801 for all PA-24-250 airplanes with serial numbers 24-1 to 24-2201 inclusive and for all PA-24-180 airplanes with serial numbers 24-1 to 24-2174, 24-2176 to 24-2298. Order Kit 470 655 for all PA-24-250 airplanes with serial numbers 24-2202 to 24-2843 inclusive and for all PA-24-180 airplanes with serial numbers 24-2175, 24-2299 to 24-3284.
D - If matching switch, baggage and door locks are desired, order Kit 25163-06, if matching baggage and door locks are desired, order Kit 25163-05 for PA-24-250 airplanes with serial numbers 24-2844 and up, PA-24-180 airplanes with serial numbers 24-3285 and up, PA-24-400 and PA-24-260 airplanes.
E - When ordering, specify color red, blue, black, white or gold.
V - Used on PA-24-260 airplanes only.
X - Used on PA-24-180 airplanes only.
Y - Used on PA-24-250 airplanes only.
Z - Used on PA-24-400 airplanes only.

Figure and Index Number	Part Number	Code	NOMENCLATURE	No. Req.	SERIAL NUMBERS AFFECTED
11A-18	25460-00	V	HANDLE - Baggage door, inside	1	24-4247, 24-4300 and up
-19	25464-00	V	ARM ASSEMBLY - Baggage door, latch	1	24-4247, 24-4300 and up
-20	25473-00	V	LATCH ASSEMBLY - Baggage door	1	24-4247, 24-4300 and up
-21	83302-66	V	SPRING - Baggage door handle (2" long)	1	24-4247, 24-4300 to 24-4538
	83302-47	V	SPRING - Baggage door handle (1 3/8" long)	2	24-4539 and up
-22	83302-67	V	SPRING - Shaft, door locking knob	1	24-4247, 24-4300 and up
-23	14843-07	V	BUSHING - Door handle, inside	1	24-4247, 24-4300 and up
-24	82732-107	V	BUSHING - Door latch link	4	24-4247, 24-4300 and up
-25	480 733	V	PIN - Roll (#79-012-062-0375)	1	24-4247, 24-4300 and up
-26	480 734	V	PIN - Roll (#79-012-062-0500)	1	24-4247, 24-4300 and up
-27	414 781	V	SCREW - (MS24693-C50)	2	24-4247, 24-4300 and up
	407 583	V	WASHER - (AN960-8L)	2	24-4247, 24-4300 and up
	404 823	V	NUT - (AN363-832)	2	24-4247, 24-4300 and up
-28	407 674	V	WASHER - (AN960-C10)	1	24-4247, 24-4300 and up
-29	415 543	V	SCREW - (MS35206-253)	1	24-4247, 24-4300 and up
	407 610	V	WASHER - (AN960-C8)	3	24-4247, 24-4300 and up
	404 823	V	NUT - (AN363-832)	1	24-4247, 24-4300 and up
-30	415 495	V	SCREW - (MS35206-230)	2	24-4247, 24-4300 and up
	407 582	V	WASHER - (AN960-6L)	2	24-4247, 24-4300 and up
	404 971	V	NUT - (AN363-C632)	2	24-4247, 24-4300 and up
-31	415 497	V	SCREW - (MS35206-232)	1	24-4247, 24-4300 and up
	407 582	V	WASHER - (AN960-6L)	1	24-4247, 24-4300 and up
	404 971	V	NUT - (AN363-C632)	1	24-4247, 24-4300 and up
-32	25781-00	V	CLIP - Spring	1	24-4539 and up
-33	424 051	V	PIN - Cotter (MS24665-132)	1	24-4247, 24-4300 and up
-34	414 781	V	SCREW - (MS24693-C50)	2	24-4783, 24-4804 and up
	494 004	V	WASHER - #8 Finishing	2	24-4783, 24-4804 and up
-35	25595-00	V	STRAP ASSEMBLY - Baggage door pull	1	24-4783, 24-4804 and up
-36	25590-00	V	WASHER - Door lock trim	1	24-4247, 24-4300 and up
-37	25389-00	V	ROD ASSEMBLY - Baggage door holder	1	
-38	24091-02	V	CLEVIS - Baggage door holder rod	1	
-39	25459-00	V	BRACKET - Baggage door holder rod	1	
-40	64076-10	V	BUSHING - Baggage door holder rod clevis	2	
-41	19063-02	XY	MOULDING - Baggage door seal	8'	
	23183-00	Z	MOULDING - Baggage door seal	8'	
	19063-02	A	MOULDING - Baggage door seal	8'	
	23183-00	V	MOULDING - Baggage door seal	8'	24-4247, 24-4300 and up
-42	20654-00	AXYZ	CATCH ASSEMBLY - Baggage door (hinge side)	1	
-43	25595-00	B	STRAP ASSEMBLY - Baggage door pull	1	
-44	414 781	B	SCREW - (MS24693-C50)	2	
	494 004	B	WASHER - #8 Finishing	2	

A - Used on PA-24-260 with serial numbers 24-3642, 24-4000 to 24-4246, 24-4248 to 24-4299 inclusive.
B - Used on PA-24-260 with serial numbers 24-4247, 24-4300 to 24-4782, 24-4784 to 24-4803 inclusive.
V - Used on PA-24-260 airplanes only.
X - Used on PA-24-180 airplanes only.
Y - Used on PA-24-250 airplanes only.
Z - Used on PA-24-400 airplanes only.

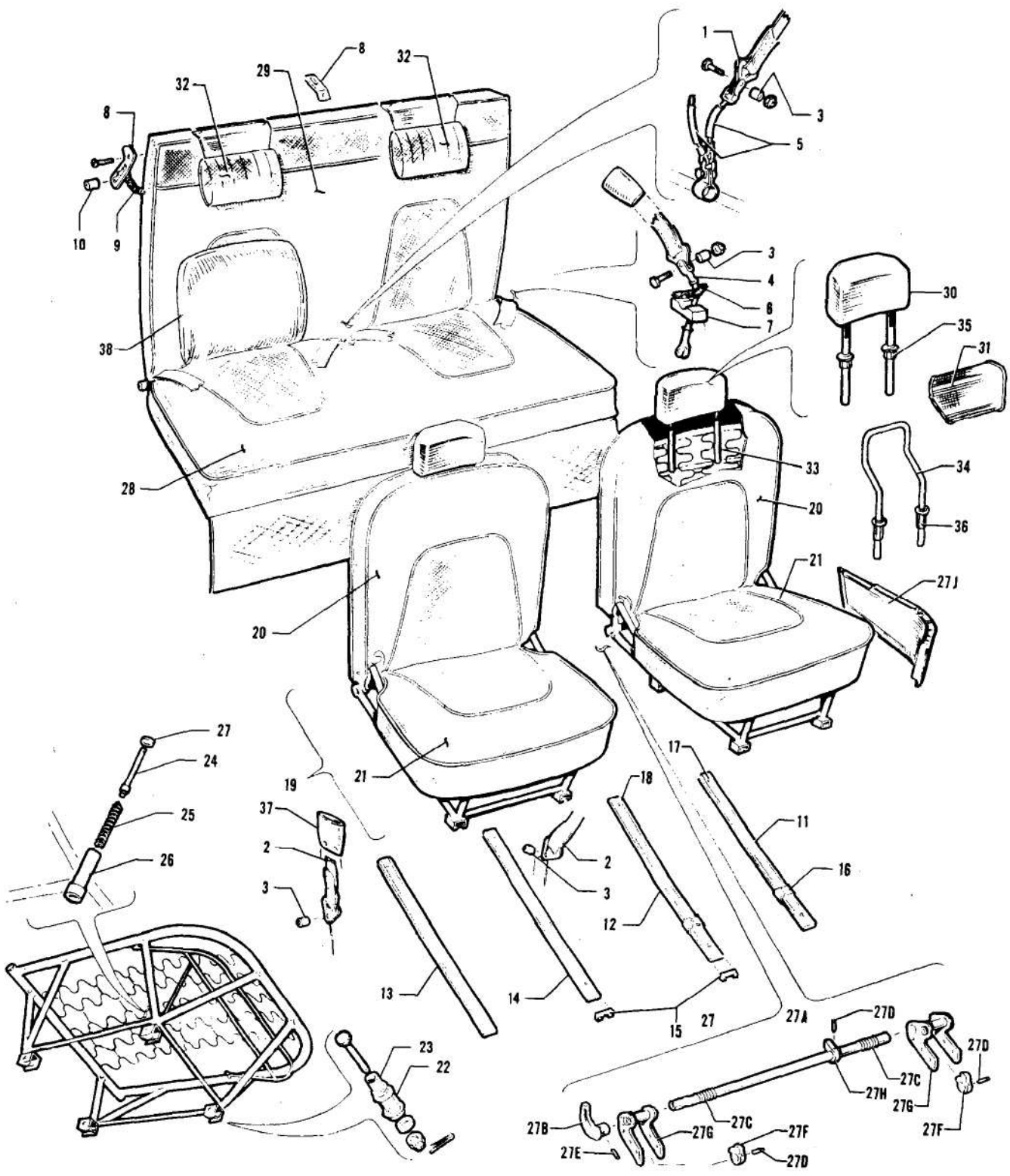

Figure 12. Seats Installation

Figure and Index Number	Part Number	Code	NOMENCLATURE	No. Req.	SERIAL NUMBERS AFFECTED
12-	20810	XY	DRAWING - Seats Installation		24-1 to 24-1251 inclusive
	21963	XY	DRAWING - Seats Installation		24-1252 to 24-1476 inclusive
	21988	XY	DRAWING - Seats Installation		24-1477 to 24-2843 inclusive
	22980	XY	DRAWING - Seats Installation		24-2844 to 24-3557 inclusive
	23405	C	DRAWING - Seats Installation		
	24836	V	DRAWING - Seats Installation		
	25015	Z	DRAWING - Seats Installation		26-125 and up
-1	13947-29	XY	BELT ASSEMBLY - Safety, rear, black	2	24-1 to 24-1636 inclusive
	13947-39	XY	BELT ASSEMBLY - Safety, rear, gray	2	24-1637 to 24-2843 inclusive
	13947-55	BXYZ	BELT ASSEMBLY - Safety, rear, brown	2	24-2844 and up, 26-2 and up
	13947-59		BELT ASSEMBLY - Safety, rear, red	2	24-3558 and up, 26-2 and up
	13947-65		BELT ASSEMBLY - Safety, rear, blue	2	24-3558 and up, 26-2 and up
	13947-29	V	BELT ASSEMBLY - Safety, rear, black	2	
-2	13947-14	XY	BELT ASSEMBLY - Safety, front, black	2	24-1 to 24-1636 inclusive
	13947-33	XY	BELT ASSEMBLY - Safety, front, gray	2	24-1637 to 24-2843 inclusive
	13947-46	BXYZ	BELT ASSEMBLY - Safety, front, brown	2	24-2844 and up, 26-2 and up
	13947-62		BELT ASSEMBLY - Safety, front, red	2	24-3558 and up, 26-2 and up
	13947-68		BELT ASSEMBLY - Safety, front, blue	2	24-3558 and up, 26-2 and up
	13947-14	B	BELT ASSEMBLY - Safety, front, black	2	
-3	14843-51		BUSHING - Safety belt	8	
-4	20868-00		CABLE ASSEMBLY - Safety belt attachment	2	
-5	20869-00		CABLE ASSEMBLY - Safety belt attachment, rear seat	1	
-6	20510-00		CLAMP - Rear seat bottom	2	
-7	20517-00		BLOCK - Rear seat support	2	
-8	23336-00	D	BRACKET - Rear seat frame attachment, left	1	
	23336-01	D	BRACKET - Rear seat frame attachment, right	1	
	24827-00	VZ	STRAP - Rear seat retainer	1	24-3642, 24-4000 and up, 26-125 and up
-9	42891-00	D	SPRING - Rear seat attachment	2	
-10	14843-32	D	BUSHING - Rear seat attachment	2	
-11	20440-05	XY	TRACK - Seat, left, outboard	1	24-1 to 24-1251 inclusive
	21955-05		TRACK - Seat, left, outboard	1	24-1252 and up, 26-2 and up
-12	20440-04	XY	TRACK - Seat, left, inboard	1	24-1 to 24-1251 inclusive
	21955-04		TRACK - Seat, left, inboard	1	24-1252 and up, 26-2 and up
-13	20440-03	XY	TRACK - Seat, right, outboard	1	24-1 to 24-1251 inclusive
	21955-03		TRACK - Seat, right, outboard	1	24-1252 and up, 26-2 and up

A - Used on PA-24-180 and PA-24-250 with serial numbers 24-1 and up, PA-24-260 with serial numbers 24-3642, 24-4000 to 24-4246, 24-4248 to 24-4299 inclusive, and PA-24-400 with serial numbers 26-2 and up.
B - If Palm Beach Interior is installed, see Figure 8A for serial numbers 24-2844 to 24-3557 inclusive.
C - Used on PA-24-180 and PA-24-250 with serial numbers 24-3558 and up, and PA-24-400 with serial numbers 26-2 to 26-124 inclusive.
D - Used on PA-24-180 and PA-24-250 with serial numbers 24-1 and up, and PA-24-400 with serial numbers 26-2 to 26-124 inclusive.
V - Used on PA-24-260 airplanes only.
X - Used on PA-24-180 airplanes only.
Y - Used on PA-24-250 airplanes only.
Z - Used on PA-24-400 airplanes only.

Figure and Index Number	Part Number	Code	NOMENCLATURE	No. Req.	SERIAL NUMBERS AFFECTED
12-14	20440-02	XY	TRACK - Seat, right, inboard	1	24-1 to 24-1251 inclusive
	21955-02		TRACK - Seat, right, inboard	1	24-1252 and up, 26-2 and up
-15	18842-00		STOP - Seat, front	2	
	18842-02		STOP - Seat, left, inboard, rear	1	
-16	18318-00		STOP - Seat	2	
-17	410 047		STRAP - Rear seat (AN509-10R-18)	8	
-18	410 047		STRAP - Rear seat (AN509-10R-18)	7	
-19	20703-07	XY	SEAT ASSEMBLY - Front, right, brown	1	24-1 to 24-126 inclusive
	21746-07	XY	SEAT ASSEMBLY - Front, right, brown	1	24-127 to 24-336 inclusive
	21746-51	XY	SEAT ASSEMBLY - Front, right, brown	1	24-337 to 24-1251 inclusive
	21960-07	XY	SEAT ASSEMBLY - Front, right, brown	1	24-1252 to 24-1476 inclusive
	21987-07	XY	SEAT ASSEMBLY - Front, right, brown	1	24-1477 to 24-1977 inclusive
	21987-75	F	SEAT ASSEMBLY - Front, right, brown	1	
	22424-07	XY	SEAT ASSEMBLY - Front, right, brown	1	24-2175, 24-2299 to 24-2843
	20703-05	XY	SEAT ASSEMBLY - Front, right, blue	1	24-1 to 24-126 inclusive
	21746-05	XY	SEAT ASSEMBLY - Front, right, blue	1	24-127 to 24-336 inclusive
	21746-49	XY	SEAT ASSEMBLY - Front, right, blue	1	24-337 to 24-1251 inclusive
	21960-05	XY	SEAT ASSEMBLY - Front, right, blue	1	24-1252 to 24-1476 inclusive
	21987-05	XY	SEAT ASSEMBLY - Front, right, blue	1	24-1477 to 24-1977 inclusive
	21987-73	F	SEAT ASSEMBLY - Front, right, blue	1	
	22424-05	XY	SEAT ASSEMBLY - Front, right, blue	1	24-2175, 24-2299 to 24-2843
	20703-03	XY	SEAT ASSEMBLY - Front, right, red	1	24-1 to 24-126 inclusive
	21746-03	XY	SEAT ASSEMBLY - Front, right, red	1	24-127 to 24-336 inclusive
	21746-47	XY	SEAT ASSEMBLY - Front, right, red	1	24-337 to 24-1251 inclusive
	21960-03	XY	SEAT ASSEMBLY - Front, right, red	1	24-1252 to 24-1476 inclusive
	21987-03	B	SEAT ASSEMBLY - Front, right, red	1	
	22424-03	XY	SEAT ASSEMBLY - Front, right, red	1	24-2175, 24-2299 to 24-2843
	21746-53	XY	SEAT ASSEMBLY - Front, right, green	1	24-337 to 24-1251 inclusive
	21960-09	XY	SEAT ASSEMBLY - Front, right, green	1	24-1252 to 24-1476 inclusive
	21987-09	XY	SEAT ASSEMBLY - Front, right, green	1	24-1477 to 24-1977 inclusive
	21987-77	F	SEAT ASSEMBLY - Front, right, green	1	
	22424-09	XY	SEAT ASSEMBLY - Front, right, green	1	24-2175, 24-2299 to 24-2843
	22955-01	CDXY	SEAT ASSEMBLY - Front, right	1	24-2844 to 24-3557 inclusive
	23090-39	EXY	SEAT ASSEMBLY - Front, right, vinyl with cloth insert	1	24-3558 and up
	23090-95	XY	SEAT ASSEMBLY - Front, right, tan, vinyl with cloth insert	1	24-3558 and up
	23090-47	EXY	SEAT ASSEMBLY - Front, right, vinyl with vinyl insert	1	24-3558 and up
	23090-97	XY	SEAT ASSEMBLY - Front, right, tan, vinyl with vinyl insert	1	24-3558 and up

A - Used on PA-24-180 and PA-24-250 with serial numbers 24-1 and up, PA-24-260 with serial numbers 24-3642, 24-4000 to 24-4246, 24-4248 to 24-4299 inclusive, and PA-24-400 with serial numbers 26-2 and up.
B - Used on PA-24-180 and PA-24-250 with serial numbers 24-1477 to 24-2174, 24-2176 to 24-2298 inclusive.
C - When ordering, specify color tan or silver and airplane serial number.
D - If Palm Beach Interior is installed, see Figure 8A for serial numbers 24-2844 to 24-3557 inclusive.
E - When ordering, specify color red or blue and airplane serial number.
F - Used on PA-24-180 and PA-24-250 with serial numbers 24-1978 to 24-2174, 24-2176 to 24-2298 inclusive.
X - Used on PA-24-180 airplanes only.
Y - Used on PA-24-250 airplanes only.

Figure and Index Number	Part Number	Code	NOMENCLATURE	No. Req.	SERIAL NUMBERS AFFECTED
12-19	23090-99	XYZ	SEAT ASSEMBLY - Front, right, tan, leather with cloth insert	1	24-3558 and up, 26-2 and up
	23090-59	EXYZ	SEAT ASSEMBLY - Front, right, leather with cloth insert	1	24-3558 and up, 26-2 and up
	23090-101	XYZ	SEAT ASSEMBLY - Front, right, tan, leather with leather insert	1	24-3558 and up, 26-2 and up
	23090-51	EXYZ	SEAT ASSEMBLY - Front, right, leather with leather insert	1	24-3558 and up, 26-2 and up
	24947-01	CV	SEAT ASSEMBLY - Front, right, vinyl with cloth insert	1	
	24947-03	CV	SEAT ASSEMBLY - Front, right, leather with leather insert	1	
	20703-06	XY	SEAT ASSEMBLY - Front, left, brown	1	24-1 to 24-126 inclusive
	21746-06	XY	SEAT ASSEMBLY - Front, left, brown	1	24-127 to 24-336 inclusive
	21746-50	XY	SEAT ASSEMBLY - Front, left, brown	1	24-337 to 24-1251 inclusive
	21960-06	XY	SEAT ASSEMBLY - Front, left, brown	1	24-1252 to 24-1476 inclusive
	21987-06	XY	SEAT ASSEMBLY - Front, left, brown	1	24-1477 to 24-1977 inclusive
	21987-74	D	SEAT ASSEMBLY - Front, left, brown	1	
	22424-06	XY	SEAT ASSEMBLY - Front, left, brown	1	24-2175, 24-2299 to 24-2843
	20703-04	XY	SEAT ASSEMBLY - Front, left, blue	1	24-1 to 24-126 inclusive
	21746-04	XY	SEAT ASSEMBLY - Front, left, blue	1	24-127 to 24-336 inclusive
	21746-48	XY	SEAT ASSEMBLY - Front, left, blue	1	24-337 to 24-1251 inclusive
	21960-04	XY	SEAT ASSEMBLY - Front, left, blue	1	24-1252 to 24-1476 inclusive
	21987-04	XY	SEAT ASSEMBLY - Front, left, blue	1	24-1477 to 24-1977 inclusive
	21987-72	D	SEAT ASSEMBLY - Front, left, blue	1	
	22424-04	XY	SEAT ASSEMBLY - Front, left, blue	1	24-2175, 24-2299 to 24-2843
	20703-02	XY	SEAT ASSEMBLY - Front, left, red	1	24-1 to 24-126 inclusive
	21746-02	XY	SEAT ASSEMBLY - Front, left, red	1	24-127 to 24-336 inclusive
	21746-46	XY	SEAT ASSEMBLY - Front, left, red	1	24-337 to 24-1251 inclusive
	21960-02	XY	SEAT ASSEMBLY - Front, left, red	1	24-1252 to 24-1476 inclusive
	21987-02	B	SEAT ASSEMBLY - Front, left, red	1	
	22424-02	XY	SEAT ASSEMBLY - Front, left, red	1	24-2175, 24-2299 to 24-2843
	21746-52	XY	SEAT ASSEMBLY - Front, left, green	1	24-337 to 24-1251 inclusive
	21960-08	XY	SEAT ASSEMBLY - Front, left, green	1	24-1252 to 24-1476 inclusive
	21987-08	XY	SEAT ASSEMBLY - Front, left, green	1	24-1477 to 24-1977 inclusive
	21987-76	XY	SEAT ASSEMBLY - Front, left, green	1	24-1477 to 24-2174 inclusive, 24-2176 to 24-2298 inclusive
	22424-08	XY	SEAT ASSEMBLY - Front, left, green	1	24-2175, 24-2299 to 24-2843

A - Used on PA-24-180 and PA-24-250 with serial numbers 24-1 and up, PA-24-260 with serial numbers 24-3642, 24-4000 to 24-4246, 24-4248 to 24-4299 inclusive. and PA-24-400 with serial numbers 26-2 and up.
B - Used on PA-24-180 and PA-24-250 with serial numbers 24-1477 to 24-2174, 24-2176 to 24-2298 inclusive.
C - When ordering, specify color red, blue or russet and airplane serial number.
D - Used on PA-24-180 and PA-24-250 with serial numbers 24-1978 to 24-2174, 24-2176 to 24-2298 inclusive.
E - When ordering, specify color red or blue and airplane serial number.
V - Used on PA-24-260 airplanes only.
X - Used on PA-24-180 airplanes only.
Y - Used on PA-24-250 airplanes only.
Z - Used on PA-24-400 airplanes only.

Figure and Index Number	Part Number	Code	NOMENCLATURE	No. Req.	SERIAL NUMBERS AFFECTED
12-19	22955-00	EFXY	SEAT ASSEMBLY - Front, left	1	24-2844 to 24-3557 inclusive
	23090-38	BXY	SEAT ASSEMBLY - Front, left, vinyl with cloth insert	1	24-3558 and up
	23090-96	XY	SEAT ASSEMBLY - Front, left, tan, vinyl with cloth insert	1	24-3558 and up
	23090-46	BXY	SEAT ASSEMBLY - Front, left, vinyl with vinyl insert	1	24-3558 and up
	23090-98	XY	SEAT ASSEMBLY - Front, left, tan, vinyl with vinyl insert	1	24-3558 and up
	23090-50	BXYZ	SEAT ASSEMBLY - Front, left, leather with leather insert	1	24-3558 and up, 26-2 and up
	23090-102	XYZ	SEAT ASSEMBLY - Front, left, tan, leather with leather insert	1	24-3558 and up, 26-2 and up
	23090-58	BXYZ	SEAT ASSEMBLY - Front, left, leather with cloth insert	1	24-3558 and up, 26-2 and up
	23090-100	XYZ	SEAT ASSEMBLY - Front, left, tan, leather with cloth insert	1	24-3558 and up, 26-2 and up
	24947-00	CV	SEAT ASSEMBLY - Front, left, vinyl with cloth insert	1	
	24947-02	CV	SEAT ASSEMBLY - Front, left, leather with leather insert	1	
-20	20703-24	XY	CUSHION - Front seat, back, left, brown	1	24-1 to 24-126 inclusive
	21746-12	XY	CUSHION - Front seat, back, left, brown	1	24-127 to 24-336 inclusive
	21746-58	XY	CUSHION - Front seat, back, left, brown	1	24-337 to 24-1251 inclusive
	21960-58	XY	CUSHION - Front seat, back, left, brown	1	24-1252 to 24-1476 inclusive
	21987-14	DXY	CUSHION - Front seat, back, left, brown	1	
	22424-22	XY	CUSHION - Front seat, back, left, brown	1	24-2175, 24-2299 to 24-2843
	20703-25	XY	CUSHION - Front seat, back, left, brown	1	24-1 to 24-126 inclusive
	21746-13	XY	CUSHION - Front seat, back, left, brown	1	24-127 to 24-336 inclusive
	21746-59	XY	CUSHION - Front seat, back, left, brown	1	24-337 to 24-1251 inclusive
	21960-59	XY	CUSHION - Front seat, back, left, brown	1	24-1252 to 24-1476 inclusive
	21987-15	DXY	CUSHION - Front seat, back, left, brown	1	
	22424-23	XY	CUSHION - Front seat, back, left, brown	1	24-2175, 24-2299 to 24-2843
	20703-22	XY	CUSHION - Front seat, back, left, blue	1	24-1 to 24-126 inclusive
	21746-10	XY	CUSHION - Front seat, back, left, blue	1	24-127 to 24-336 inclusive
	21746-56	XY	CUSHION - Front seat, back, left, blue	1	24-337 to 24-1251 inclusive
	21960-56	XY	CUSHION - Front seat, back, left, blue	1	24-1252 to 24-1476 inclusive
	21987-12	D	CUSHION - Front seat, back, left, blue	1	
	22424-20	XY	CUSHION - Front seat, back, left, blue	1	24-2175, 24-2299 to 24-2843
	20703-23	XY	CUSHION - Front seat, back, right, blue	1	24-1 to 24-126 inclusive
	21746-11	XY	CUSHION - Front seat, back, right, blue	1	24-127 to 24-336 inclusive
	21746-57	XY	CUSHION - Front seat, back, right, blue	1	24-337 to 24-1251 inclusive
	21960-57	XY	CUSHION - Front seat, back, right, blue	1	24-1252 to 24-1476 inclusive
	21987-13	D	CUSHION - Front seat, back, right, blue	1	
	22424-21	XY	CUSHION - Front seat, back, right, blue	1	24-2175, 24-2299 to 24-2843

A - Used on PA-24-180 and PA-24-250 with serial numbers 24-1 and up, PA-24-260 with serial numbers 24-3642, 24-4000 to 24-4246, 24-4248 to 24-4299 inclusive, and PA-24-400 with serial numbers 26-2 and up.
B - When ordering, specify color red or blue and airplane serial number.
C - When ordering, specify color red, blue or russet and airplane serial number.
D - Used on PA-24-180 and PA-24-250 with serial numbers 24-1477 to 24-2174, 24-2176 to 24-2298 inclusive.
E - When ordering, specify color tan or silver and airplane serial number.
F - If Palm Beach Interior is installed, see Figure 8A for serial numbers 24-2844 to 24-3557 inclusive.
V - Used on PA-24-260 airplanes only.
X - Used on PA-24-180 airplanes only.
Y - Used on PA-24-250 airplanes only.
Z - Used on PA-24-400 airplanes only.

Figure and Index Number	Part Number	Code	NOMENCLATURE	No. Req.	SERIAL NUMBERS AFFECTED
12-20	20703-20	XY	CUSHION - Front seat, back, left, red	1	24-1 to 24-126 inclusive
	21746-08	XY	CUSHION - Front seat, back, left, red	1	24-127 to 24-336 inclusive
	21746-54	XY	CUSHION - Front seat, back, left, red	1	24-337 to 24-1251 inclusive
	21960-54	XY	CUSHION - Front seat, back, left, red	1	24-1252 to 24-1476 inclusive
	21987-10	E	CUSHION - Front seat, back, left, red	1	
	22424-18	XY	CUSHION - Front seat, back, left, red	1	24-2175, 24-2299 to 24-2843
	20703-21	XY	CUSHION - Front seat, back, right, red	1	24-1 to 24-126 inclusive
	21746-09	XY	CUSHION - Front seat, back, right, red	1	24-127 to 24-336 inclusive
	21746-55	XY	CUSHION - Front seat, back, right, red	1	24-337 to 24-1251 inclusive
	21960-55	XY	CUSHION - Front seat, back, right, red	1	24-1252 to 24-1476 inclusive
	21987-11	E	CUSHION - Front seat, back, right, red	1	
	22424-19	XY	CUSHION - Front seat, back, right, red	1	24-2175, 24-2299 to 24-2843
	21746-60	XY	CUSHION - Front seat, back, left, green	1	24-337 to 24-1251 inclusive
	21960-60	XY	CUSHION - Front seat, back, left, green	1	24-1252 to 24-1476 inclusive
	21987-16	E	CUSHION - Front seat, back, left, green	1	
	22424-24	XY	CUSHION - Front seat, back, left, green	1	24-2175, 24-2299 to 24-2843
	21746-61	XY	CUSHION - Front seat, back, right, green	1	24-337 to 24-1251 inclusive
	21960-61	XY	CUSHION - Front seat, back, right, green	1	24-1252 to 24-1476 inclusive
	21987-17	E	CUSHION - Front seat, back, right, green	1	
	22424-25	XY	CUSHION - Front seat, back, right, green	1	24-2175, 24-2299 to 24-2843
	22955-06	CDXY	CUSHION - Front seat, back, left and right	1	24-2844 to 24-3557 inclusive
	23090-62	BXY	CUSHION - Front seat, back, left, vinyl with cloth insert	1	24-3558 and up
	23090-116	XY	CUSHION - Front seat, back, left, tan, vinyl with cloth insert	1	24-3558 and up
	23090-70	BXY	CUSHION - Front seat, back, left, vinyl with vinyl insert	1	24-3558 and up
	23090-118	XY	CUSHION - Front seat, back, left, tan, vinyl with vinyl insert	1	24-3558 and up
	23090-78	BXYZ	CUSHION - Front seat, back, left, leather with leather insert	1	24-3558 and up, 26-2 and up
	23090-122	XYZ	CUSHION - Front seat, back, left, tan, leather with leather insert	1	24-3558 and up, 26-2 and up
	23090-94	BXYZ	CUSHION - Front seat, back, left, leather with cloth insert	1	24-3558 and up, 26-2 and up
	23090-120	XYZ	CUSHION - Front seat, back, left, tan, leather with cloth insert	1	24-3558 and up, 26-2 and up

A - Used on PA-24-180 and PA-24-250 with serial numbers 24-1 and up, PA-24-260 with serial numbers 24-3642, 24-4000 to 24-4246, 24-4248 to 24-4299 inclusive, and PA-24-400 with serial numbers 26-2 and up.
B - When ordering, specify color red or blue and airplane serial number.
C - When ordering, specify color tan or silver and airplane serial number.
D - If Palm Beach Interior is installed, see Figure 8A for serial numbers 24-2844 to 24-3557 inclusive.
E - Used on PA-24-180 and PA-24-250 with serial numbers 24-1477 to 24-2174, 24-2176 to 24-2298 inclusive.
X - Used on PA-24-180 airplanes only.
Y - Used on PA-24-250 airplanes only.
Z - Used on PA-24-400 airplanes only.

Figure and Index Number	Part Number	Code	NOMENCLATURE	No. Req.	SERIAL NUMBERS AFFECTED
12-20	31685-02	BV	CUSHION - Front seat, back, left, vinyl with cloth insert	1	
	31685-00	BV	CUSHION - Front seat, back, left, leather with leather insert	1	
	23090-63	CXY	CUSHION - Front seat, back, right, vinyl with cloth insert	1	24-3558 and up
	23090-115	XY	CUSHION - Front seat, back, right, tan, vinyl with cloth insert	1	24-3558 and up
	23090-69	CXY	CUSHION - Front seat, back, right, vinyl with vinyl insert	1	24-3558 and up
	23090-117	XY	CUSHION - Front seat, back, right, tan, vinyl with vinyl insert	1	24-3558 and up
	23090-119	XYZ	CUSHION - Front seat, back, right, tan, leather with leather insert	1	24-3558 and up, 26-2 and up
	23090-93	CXYZ	CUSHION - Front seat, back, right, leather with cloth insert	1	24-3558 and up, 26-2 and up
	23090-121	XYZ	CUSHION - Front seat, back, right, tan, leather with leather insert	1	24-3558 and up, 26-2 and up
	23090-79	CXYZ	CUSHION - Front seat, back, right, leather with leather insert	1	24-3558 and up, 26-2 and up
	31685-02	BV	CUSHION - Front seat, back, right, vinyl with cloth insert	1	
	31685-00	BV	CUSHION - Front seat, back, right, leather with leather insert	1	
-21	20703-28	XY	CUSHION - Front seat, bottom, brown	1	24-1 to 24-126 inclusive
	21746-22	XY	CUSHION - Front seat, bottom, brown	1	24-127 to 24-336 inclusive
	21746-66	XY	CUSHION - Front seat, bottom, brown	1	24-337 to 24-1251 inclusive
	21960-42	XY	CUSHION - Front seat, bottom, left, brown	1	24-1252 to 24-1476 inclusive
	21987-62	D	CUSHION - Front seat, bottom, left, brown	1	
	22424-14	XY	CUSHION - Front seat, bottom, left, brown	1	24-2175, 24-2299 to 24-2843
	21960-43	XY	CUSHION - Front seat, bottom, right, brown	1	24-1252 to 24-1476 inclusive
	21987-63	D	CUSHION - Front seat, bottom, right, brown	1	
	22424-15	XY	CUSHION - Front seat, bottom, right, brown	1	24-2175, 24-2299 to 24-2843

A - Used on PA-24-180 and PA-24-250 with serial numbers 24-1 and up, PA-24-260 with serial numbers 24-3642, 24-4000 to 24-4246, 24-4248 to 24-4299 inclusive. and PA-24-400 with serial numbers 26-2 and up.
B - When ordering, specify color red, blue or russet and airplane serial number.
C - When ordering, specify color red or blue and airplane serial number.
D - Used on PA-24-180 and PA-24-250 with serial numbers 24-1477 to 24-2174, 24-2176 to 24-2298 inclusive.
V - Used on PA-24-260 airplanes only.
X - Used on PA-24-180 airplanes only.
Y - Used on PA-24-250 airplanes only.
Z - Used on PA-24-400 airplanes only.

Figure and Index Number	Part Number	Code	NOMENCLATURE	No. Req.	SERIAL NUMBERS AFFECTED
12-21	20703-27	XY	CUSHION - Front seat, bottom, blue	1	24-1 to 24-126 inclusive
	21746-21	XY	CUSHION - Front seat, bottom, blue	1	24-127 to 24-336 inclusive
	21746-65	XY	CUSHION - Front seat, bottom, blue	1	24-337 to 24-1251 inclusive
	21960-40	XY	CUSHION - Front seat, bottom, left, blue	1	24-1252 to 24-1476 inclusive
	21987-60	E	CUSHION - Front seat, bottom, left, blue	1	
	22424-12	XY	CUSHION - Front seat, bottom, left, blue	1	24-2175, 24-2299 to 24-2843
	21960-41	XY	CUSHION - Front seat, bottom, right, blue	1	24-1252 to 24-1476 inclusive
	21987-61	E	CUSHION - Front seat, bottom, right, blue	1	
	22424-13	XY	CUSHION - Front seat, bottom, right, blue	1	24-2175, 24-2299 to 24-2843
	20703-26	XY	CUSHION - Front seat, bottom, red	1	24-1 to 24-126 inclusive
	21746-20	XY	CUSHION - Front seat, bottom, red	1	24-127 to 24-336 inclusive
	21746-64	XY	CUSHION - Front seat, bottom, red	1	24-337 to 24-1251 inclusive
	21960-38	XY	CUSHION - Front seat, bottom, left, red	1	24-1252 to 24-1476 inclusive
	21987-58	E	CUSHION - Front seat, bottom, left, red	1	
	22424-10	XY	CUSHION - Front seat, bottom, left, red	1	24-2175, 24-2299 to 24-2843
	21960-39	XY	CUSHION - Front seat, bottom, right, red	1	24-1252 to 24-1476 inclusive
	21987-59	E	CUSHION - Front seat, bottom, right, red	1	
	22424-11	XY	CUSHION - Front seat, bottom, right, red	1	24-2175, 24-2299 to 24-2843
	21746-67	XY	CUSHION - Front seat, bottom, green	1	24-337 to 24-1251 inclusive
	21960-44	XY	CUSHION - Front seat, bottom, left, green	1	24-1252 to 24-1476 inclusive
	21987-64	E	CUSHION - Front seat, bottom, left, green	1	
	22424-16	XY	CUSHION - Front seat, bottom, left, green	1	24-2175, 24-2299 to 24-2843
	22955-04	CDXY	CUSHION - Front seat, bottom, left	1	24-2844 to 24-3557 inclusive
	21960-45	XY	CUSHION - Front seat, bottom, right, green	1	24-1252 to 24-1476 inclusive
	21987-65	E	CUSHION - Front seat, bottom, right, green	1	
	22424-17	XY	CUSHION - Front seat, bottom, right, green	1	24-2175, 24-2299 to 24-2843
	22955-05	CDXY	CUSHION - Front seat, bottom, right	1	24-2844 to 24-3557 inclusive
	23090-40	BXY	CUSHION - Front seat, bottom, left, vinyl with cloth insert	1	24-3558 and up
	23090-104	XY	CUSHION - Front seat, bottom, left, tan, vinyl with cloth insert	1	24-3558 and up
	23090-48	BXY	CUSHION - Front seat, bottom, left, vinyl with vinyl insert	1	24-3558 and up
	23090-106	XY	CUSHION - Front seat, bottom, left, tan, vinyl with vinyl insert	1	24-3558 and up

A - Used on PA-24-180 and PA-24-250 with serial numbers 24-1 and up, PA-24-260 with serial numbers 24-3642, 24-4000 to 24-4246, 24-4248 to 24-4299 inclusive, and PA-24-400 with serial numbers 26-2 and up.
B - When ordering, specify color red or blue and airplane serial number.
C - When ordering, specify color tan or silver and airplane serial number.
D - If Palm Beach Interior is installed, see Figure 8A for serial numbers 24-2844 to 24-3557 inclusive.
E - Used on PA-24-180 and PA-24-250 with serial numbers 24-1477 to 24-2174, 24-2176 to 24-2298 inclusive.
X - Used on PA-24-180 airplanes only.
Y - Used on PA-24-250 airplanes only.

Figure and Index Number	Part Number	Code	NOMENCLATURE	No. Req.	SERIAL NUMBERS AFFECTED
12-21	23090-52	BXYZ	CUSHION - Front seat, bottom, left, leather with leather insert	1	24-3558 and up, 26-2 and up
	23090-110	XYZ	CUSHION - Front seat, bottom, left, tan, leather with leather insert	1	24-3558 and up, 26-2 and up
	23090-60	BXYZ	CUSHION - Front seat, bottom, left, leather with cloth insert	1	24-3558 and up, 26-2 and up
	23090-108	XYZ	CUSHION - Front seat, bottom, left, tan, leather with cloth insert	1	24-3558 and up, 26-2 and up
	24947-04	CV	CUSHION - Front seat, bottom, left, vinyl with cloth insert	1	
	24947-06	CV	CUSHION - Front seat, bottom, left, leather with leather insert	1	
	23090-41	BXY	CUSHION - Front seat, bottom, right, vinyl with cloth insert	1	24-3558 and up
	23090-103	XY	CUSHION - Front seat, bottom, right, tan, vinyl with cloth insert	1	24-3558 and up
	23090-49	BXY	CUSHION - Front seat, bottom, right, vinyl with vinyl insert	1	24-3558 and up
	23090-105	XY	CUSHION - Front seat, bottom, right, tan, vinyl with vinyl insert	1	24-3558 and up
	23090-107	XYZ	CUSHION - Front seat, bottom, right, tan, leather with cloth insert	1	24-3558 and up, 26-2 and up
	23090-61	BXYZ	CUSHION - Front seat, bottom, right, leather with cloth insert	1	24-3558 and up, 26-2 and up
	23090-109	XYZ	CUSHION - Front seat, bottom, right, tan, leather with leather insert	1	24-3558 and up, 26-2 and up
	23090-53	BXYZ	CUSHION - Front seat, bottom, right, leather with leather insert	1	24-3558 and up, 26-2 and up
	24947-05	CV	CUSHION - Front seat, bottom, right, vinyl with cloth insert	1	
	24947-07	CV	CUSHION - Front seat, bottom, right, leather with leather insert	1	

A - Used on PA-24-180 and PA-24-250 with serial numbers 24-1 and up, PA-24-260 with serial numbers 24-3642, 24-4000 to 24-4246, 24-4248 to 24-4299 inclusive, and PA-24-400 with serial numbers 26-2 and up.
B - When ordering, specify color red or blue and airplane serial number.
C - When ordering, specify color red, blue or russet and airplane serial number.
V - Used on PA-24-260 airplanes only.
X - Used on PA-24-180 airplanes only.
Y - Used on PA-24-250 airplanes only.
Z - Used on PA-24-400 airplanes only.

Figure and Index Number	Part Number	Code	NOMENCLATURE	No. Req.	SERIAL NUMBERS AFFECTED
12-22	18968-00		ROLLER - Seat	4	
-23	14175-43		BUSHING - Seat roller	4	
-24	12073-00		PLUNGER ASSEMBLY - Seat	2	
-25	50111-00		SPRING - Seat plunger	2	
-26	86102-56		BUSHING - Seat plunger	2	
-27	85012-30		WASHER - Seat plunger	2	
-27a	19392-12		TUBE ASSEMBLY - Reclining mechanism, left	1	24-1252 and up, 26-2 and up
	19392-13		TUBE ASSEMBLY - Reclining mechanism, right	1	24-1252 and up, 26-2 and up
-27b	19455-00		HANDLE - Seat back adjustment	1	24-1252 and up, 26-2 and up
-27c	19336-00		SPRING - Seat back adjustment, inboard	1	24-1252 and up, 26-2 and up
	19336-01		SPRING - Seat back adjustment, outboard	1	24-1252 and up, 26-2 and up
-27d	480 701		PIN - Roll (#59-028-125-0625)	3	24-1252 and up, 26-2 and up
-27e	480 683		PIN - Roll (#59-028-125-0687)	1	24-1252 and up, 26-2 and up
-27f	19365-00		CAM - Reclining seat	2	24-1252 and up, 26-2 and up
-27g	19359-00		BRACKET - Reclining seat	2	24-1252 and up, 26-2 and up
-27h	19304-00		STOP - Reclining seat back	1	24-1252 and up, 26-2 and up
-27j	23252-06	BXY	SKIRT ASSEMBLY - Front seat, vinyl	1	24-3558 to 24-3604 inclusive
	23252-08	BXY	SKIRT ASSEMBLY - Front seat, leather	1	24-3558 to 24-3604 inclusive
	23252-10	XY	SKIRT ASSEMBLY - Front seat, tan, vinyl	1	24-3558 to 24-3604 inclusive
	23252-12	XY	SKIRT ASSEMBLY - Front seat, tan, leather	1	24-3558 to 24-3604 inclusive
	24617-02	B	SKIRT ASSEMBLY - Front seat, vinyl, left	1	24-3605 and up, 26-2 and up
	24617-03	B	SKIRT ASSEMBLY - Front seat, vinyl, right	1	24-3605 and up, 26-2 and up
	24617-04	BXYZ	SKIRT ASSEMBLY - Front seat, leather, left	1	24-3605 and up, 26-2 and up
	24617-05	BXYZ	SKIRT ASSEMBLY - Front seat, leather, right	1	24-3605 and up, 26-2 and up
	24617-06	XYZ	SKIRT ASSEMBLY - Front seat, tan, vinyl, left	1	24-3605 and up, 26-2 and up
	24617-07	XYZ	SKIRT ASSEMBLY - Front seat, tan, vinyl, right	1	24-3605 and up, 26-2 and up
	24617-08	XYZ	SKIRT ASSEMBLY - Front seat, tan, leather, left	1	24-3605 and up, 26-2 and up
	24617-09	XYZ	SKIRT ASSEMBLY - Front seat, tan, leather, right	1	24-3605 and up, 26-2 and up
	24617-18	V	SKIRT ASSEMBLY - Front seat, russet, vinyl, left	1	
	24617-19	V	SKIRT ASSEMBLY - Front seat, russet, vinyl, right	1	
-28	20808-04	XY	CUSHION ASSEMBLY - Rear seat, bottom, brown	1	24-1 to 24-126 inclusive
	21738-04	XY	CUSHION ASSEMBLY - Rear seat, bottom, brown	1	24-127 to 24-336 inclusive
	21738-18	XY	CUSHION ASSEMBLY - Rear seat, bottom, brown	1	24-337 to 24-1476 inclusive
	21982-03	XY	CUSHION ASSEMBLY - Rear seat, bottom, brown	1	24-1477 to 24-2112 inclusive
	22070-03	XY	CUSHION ASSEMBLY - Rear seat, bottom, brown	1	24-2113 to 24-2201 inclusive
	22070-10	C	CUSHION ASSEMBLY - Rear seat, bottom, brown	1	
	22438-04	XY	CUSHION ASSEMBLY - Rear seat, bottom, brown	1	24-2175, 24-2299 to 24-2843

A - Used on PA-24-180 and PA-24-250 with serial numbers 24-1 and up, PA-24-260 with serial numbers 24-3642, 24-4000 to 24-4246, 24-4248 to 24-4299 inclusive, and PA-24-400 with serial numbers 26-2 and up.
B - When ordering, specify color red or blue and airplane serial number.
C - Used on PA-24-180 and PA-24-250 with serial numbers 24-2202 to 24-2174, 24-2176 to 24-2298 inclusive.
V - Used on PA-24-260 airplanes only.
X - Used on PA-24-180 airplanes only.
Y - Used on PA-24-250 airplanes only.
Z - Used on PA-24-400 airplanes only.

Figure and Index Number	Part Number	Code	NOMENCLATURE	No. Req.	SERIAL NUMBERS AFFECTED
12-28	20808-03	XY	CUSHION ASSEMBLY - Rear seat, bottom, blue	1	24-1 to 24-126 inclusive
	21738-03	XY	CUSHION ASSEMBLY - Rear seat, bottom, blue	1	24-127 to 24-336 inclusive
	21738-17	XY	CUSHION ASSEMBLY - Rear seat, bottom, blue	1	24-336 to 24-1476 inclusive
	21982-05	XY	CUSHION ASSEMBLY - Rear seat, bottom, blue	1	24-1477 to 24-1781 inclusive
	22070-05	XY	CUSHION ASSEMBLY - Rear seat, bottom, blue	1	24-1782 to 24-2201 inclusive
	22070-12	F	CUSHION ASSEMBLY - Rear seat, bottom, blue	1	
	22438-03	XY	CUSHION ASSEMBLY - Rear seat, bottom, blue	1	24-2175, 24-2299 to 24-2843
	20808-02	XY	CUSHION ASSEMBLY - Rear seat, bottom, red	1	24-1 to 24-126 inclusive
	21738-02	XY	CUSHION ASSEMBLY - Rear seat, bottom, red	1	24-127 to 24-336 inclusive
	21738-16	XY	CUSHION ASSEMBLY - Rear seat, bottom, red	1	24-337 to 24-1476 inclusive
	21982-02	XY	CUSHION ASSEMBLY - Rear seat, bottom, red	1	24-1477 to 24-2201 inclusive
	22070-02	F	CUSHION ASSEMBLY - Rear seat, bottom, red	1	
	22438-02	XY	CUSHION ASSEMBLY - Rear seat, bottom, red	1	24-2175, 24-2299 to 24-2843
	21738-19	XY	CUSHION ASSEMBLY - Rear seat, bottom, green	1	24-337 to 24-1476 inclusive
	21982-04	XY	CUSHION ASSEMBLY - Rear seat, bottom, green	1	24-1477 to 24-1734, 24-1827
	22070-04	XY	CUSHION ASSEMBLY - Rear seat, bottom, green	1	24-1735 to 24-1826 inclusive. 24-1828 to 24-1977 inclusive
	22070-11	B	CUSHION ASSEMBLY - Rear seat, bottom, green	1	
	22438-05	XY	CUSHION ASSEMBLY - Rear seat, bottom, green	1	24-2175, 24-2299 to 24-2843
	22957-00	CDXY	CUSHION ASSEMBLY - Rear seat, bottom	1	24-2844 to 24-3557 inclusive
	23274-18	EXY	CUSHION ASSEMBLY - Rear seat, bottom, vinyl with cloth insert	1	24-3558 and up
	23274-20	XY	CUSHION ASSEMBLY - Rear seat, bottom, tan, vinyl with cloth insert	1	24-3558 and up
	23274-17	EXY	CUSHION ASSEMBLY - Rear seat, bottom, vinyl with vinyl insert	1	24-3558 and up
	23274-19	XY	CUSHION ASSEMBLY - Rear seat, bottom, tan, vinyl with vinyl insert	1	24-3558 and up
	23274-14	EXYZ	CUSHION ASSEMBLY - Rear seat, bottom, leather with cloth insert	1	24-3558 and up, 26-2 to 26-124
	23274-16	XYZ	CUSHION ASSEMBLY - Rear seat, bottom, tan, leather with cloth insert	1	24-3558 and up, 26-2 to 26-124
	23274-13	EXYZ	CUSHION ASSEMBLY - Rear seat, bottom, leather with leather insert	1	24-3558 and up, 26-2 to 26-124
	23274-15	XYZ	CUSHION ASSEMBLY - Rear seat, bottom, tan, leather with leather insert	1	24-3558 and up, 26-2 to 26-124

A - Used on PA-24-180 and PA-24-250 with serial numbers 24-1 and up, PA-24-260 with serial numbers 24-3642, 24-4000 to 24-4246, 24-4248 to 24-4299 inclusive. and PA-24-400 with serial numbers 26-2 and up.
B - Used on PA-24-180 and PA-24-250 with serial numbers 24-1978 to 24-2174, 24-2176 to 24-2298 inclusive.
C - When ordering, specify color tan or silver and airplane serial number.
D - If Palm Beach Interior is installed, see Figure 8A for serial numbers 24-2844 to 24-3557 inclusive.
E - When ordering, specify color red or blue and airplane serial number.
F - Used on PA-24-180 and PA-24-250 with serial numbers 24-2202 to 24-2174, 24-2176 to 24-2298 inclusive.
X - Used on PA-24-180 airplanes only.
Y - Used on PA-24-250 airplanes only.
Z - Used on PA-24-400 airplanes only.

Figure and Index Number	Part Number	Code	NOMENCLATURE	No. Req.	SERIAL NUMBERS AFFECTED
12-28	25011-00	EZ	CUSHION ASSEMBLY - Rear seat, bottom, leather with leather insert	1	26-125 and up
	25011-02	EZ	CUSHION ASSEMBLY - Rear seat, bottom, leather with cloth insert	1	26-125 and up
	25011-03	Z	CUSHION ASSEMBLY - Rear seat, bottom, tan, leather with leather insert	1	26-125 and up
	25011-04	Z	CUSHION ASSEMBLY - Rear seat, bottom, tan, leather with cloth insert	1	26-125 and up
	24882-00	CV	CUSHION ASSEMBLY - Rear seat, bottom, vinyl with cloth insert	1	
	24882-09	CV	CUSHION ASSEMBLY - Rear seat, bottom, leather with leather insert	1	
-29	20809-04	XY	CUSHION ASSEMBLY - Rear seat, back, brown	1	24-1 to 24-126 inclusive
	21744-04	XY	CUSHION ASSEMBLY - Rear seat, back, brown	1	24-127 to 24-336 inclusive
	21744-20	XY	CUSHION ASSEMBLY - Rear seat, back, brown	1	24-337 to 24-1476 inclusive
	21980-04	XY	CUSHION ASSEMBLY - Rear seat, back, brown	1	24-1477 to 24-2112 inclusive
	22071-04	XY	CUSHION ASSEMBLY - Rear seat, back, brown	1	24-2113 to 24-2201 inclusive
	22071-11	D	CUSHION ASSEMBLY - Rear seat, back, brown	1	
	22439-04	XY	CUSHION ASSEMBLY - Rear seat, back, brown	1	24-2175, 24-2299 to 24-2843
	20809-03	XY	CUSHION ASSEMBLY - Rear seat, back, blue	1	24-1 to 24-126 inclusive
	21744-03	XY	CUSHION ASSEMBLY - Rear seat, back, blue	1	24-127 to 24-336 inclusive
	21744-19	XY	CUSHION ASSEMBLY - Rear seat, back, blue	1	24-337 to 24-1476 inclusive
	21980-03	XY	CUSHION ASSEMBLY - Rear seat, back, blue	1	24-1477 to 24-1781 inclusive
	22071-03	XY	CUSHION ASSEMBLY - Rear seat, back, blue	1	24-1782 to 24-2201 inclusive
	22071-10	D	CUSHION ASSEMBLY - Rear seat, back, blue	1	
	22439-03	XY	CUSHION ASSEMBLY - Rear seat, back, blue	1	24-2175, 24-2299 to 24-2843
	20809-02	XY	CUSHION ASSEMBLY - Rear seat, back, red	1	24-1 to 24-126 inclusive
	21744-02	XY	CUSHION ASSEMBLY - Rear seat, back, red	1	24-127 to 24-336 inclusive
	21744-18	XY	CUSHION ASSEMBLY - Rear seat, back, red	1	24-337 to 24-1476 inclusive
	21980-02	XY	CUSHION ASSEMBLY - Rear seat, back, red	1	24-1477 to 24-1977 inclusive
	22071-02	B	CUSHION ASSEMBLY - Rear seat, back, red	1	
	22439-02	XY	CUSHION ASSEMBLY - Rear seat, back, red	1	24-2175, 24-2299 to 24-2843

A - Used on PA-24-180 and PA-24-250 with serial numbers 24-1 and up, PA-24-260 with serial numbers 24-3642, 24-4000 to 24-4246, 24-4248 to 24-4299 inclusive, and PA-24-400 with serial numbers 26-2 and up.
B - Used on PA-24-180 and PA-24-250 with serial numbers 24-1978 to 24-2174, 24-2176 to 24-2298 inclusive.
C - When ordering, specify color red, blue or russet and airplane serial number.
D - Used on PA-24-180 and PA-24-250 with serial numbers 24-2202 to 24-2174, 24-2176 to 24-2298 inclusive.
E - When ordering, specify color red or blue and airplane serial number.
V - Used on PA-24-260 airplanes only.
X - Used on PA-24-180 airplanes only.
Y - Used on PA-24-250 airplanes only.
Z - Used on PA-24-400 airplanes only.

Figure and Index Number	Part Number	Code	NOMENCLATURE	No. Req.	SERIAL NUMBERS AFFECTED
12-29	21744-21	XY	CUSHION ASSEMBLY - Rear seat, back, green	1	24-337 to 24-1476 inclusive
	21980-05	XY	CUSHION ASSEMBLY - Rear seat, back, green	1	24-1477 to 24-1734, 24-1827
	22071-05	XY	CUSHION ASSEMBLY - Rear seat, back, green	1	24-1735 to 24-1826 inclusive, 24-1828 to 24-1977 inclusive
	22071-12	B	CUSHION ASSEMBLY - Rear seat, back, green	1	
	22439-05	XY	CUSHION ASSEMBLY - Rear seat, back, green	1	24-2175, 24-2299 to 24-2843
	22956-00	CDXY	CUSHION ASSEMBLY - Rear seat, back	1	24-2844 to 24-3557 inclusive
	23275-19	EXY	CUSHION ASSEMBLY - Rear seat, back, vinyl with cloth insert	1	24-3558 and up
	23275-21	XY	CUSHION ASSEMBLY - Rear seat, back, tan, vinyl with cloth insert	1	24-3558 and up
	23275-18	EXY	CUSHION ASSEMBLY - Rear seat, back, vinyl with vinyl insert	1	24-3558 and up
	23275-20	XY	CUSHION ASSEMBLY - Rear seat, back, tan, vinyl with vinyl insert	1	24-3558 and up
	23275-15	EXYZ	CUSHION ASSEMBLY - Rear seat, back, leather with cloth insert	1	24-3558 and up, 26-2 to 26-124
	23275-17	XYZ	CUSHION ASSEMBLY - Rear seat, back, tan, leather with cloth insert	1	24-3558 and up, 26-2 to 26-124
	23275-14	EXYZ	CUSHION ASSEMBLY - Rear seat, back, leather with leather insert	1	24-3558 and up, 26-2 to 26-124
	23275-16	XYZ	CUSHION ASSEMBLY - Rear seat, back, tan, leather with leather insert	1	24-3558 and up, 26-2 to 26-124
	25012-00	EZ	CUSHION ASSEMBLY - Rear seat, back, leather with leather insert	1	26-125 and up
	25012-02	EZ	CUSHION ASSEMBLY - Rear seat, back, leather with cloth insert	1	26-125 and up
	25012-03	Z	CUSHION ASSEMBLY - Rear seat, back, tan, leather with leather insert	1	26-125 and up
	25012-04	Z	CUSHION ASSEMBLY - Rear seat, back, tan, leather with cloth insert	1	26-125 and up
	24937-02	FV	CUSHION ASSEMBLY - Rear seat, back, vinyl with cloth insert	1	
	24937-03	FV	CUSHION ASSEMBLY - Rear seat, back, leather with leather insert	1	

A - Used on PA-24-180 and PA-24-250 with serial numbers 24-1 and up, PA-24-260 with serial numbers 24-3642, 24-4000 to 24-4246, 24-4248 to 24-4299 inclusive, and PA-24-400 with serial numbers 26-2 and up.
B - Used on PA-24-180 and PA-24-250 with serial numbers 24-1978 to 24-2174, 24-2176 to 24-2298 inclusive.
C - When ordering, specify color tan or silver and airplane serial number.
D - If Palm Beach Interior is installed, see Figure 8A for serial numbers 24-2844 to 24-3557 inclusive.
E - When ordering, specify color red or blue and airplane serial number.
F - When ordering, specify color red, blue or russet and airplane serial number.
V - Used on PA-24-260 airplanes only.
X - Used on PA-24-180 airplanes only.
Y - Used on PA-24-250 airplanes only.
Z - Used on PA-24-400 airplanes only.

Figure and Index Number	Part Number	Code	NOMENCLATURE	No. Req.	SERIAL NUMBERS AFFECTED
12-30	19341-02	DXY	HEADREST ASSEMBLY - Brown	2	24-1252 to 24-1476 inclusive
	16510-04	DXY	HEADREST ASSEMBLY - Brown	2	24-1477 to 24-2112 inclusive
	16510-29	DXY	HEADREST ASSEMBLY - Brown	2	24-2113 to 24-2843 inclusive
	19341-06	DXY	HEADREST ASSEMBLY - Blue	2	24-1252 to 24-1476 inclusive
	16510-03	DXY	HEADREST ASSEMBLY - Blue	2	24-1477 to 24-1781 inclusive
	16510-28	DE	HEADREST ASSEMBLY - Blue	2	
	22434-03	DXY	HEADREST ASSEMBLY - Blue	2	24-2175, 24-2299 to 24-2843
	19341-10	DXY	HEADREST ASSEMBLY - Red	2	24-1252 to 24-1476 inclusive
	16510-02	DXY	HEADREST ASSEMBLY - Red	2	24-1477 to 24-1977 inclusive
	16510-27	DG	HEADREST ASSEMBLY - Red	2	
	22434-02	DXY	HEADREST ASSEMBLY - Red	2	24-2175, 24-2299 to 24-2843
	19341-17	DXY	HEADREST ASSEMBLY - Green	2	24-1252 to 24-1476 inclusive
	16510-15	DXY	HEADREST ASSEMBLY - Green	2	24-1477 to 24-1734, 24-1827
	16510-30	DXY	HEADREST ASSEMBLY - Green	2	24-1735 to 24-2843 inclusive
	22979-00	BCD	HEADREST ASSEMBLY - Front seat	2	24-2844 to 24-3557 inclusive
	22979-00	BCDX	HEADREST ASSEMBLY - Front seat	2	24-2844 to 24-3557 inclusive
	22979-00	BCDY	HEADREST ASSEMBLY - Front seat	2	24-2844 to 24-3557 inclusive
	19943-27	F	HEADREST ASSEMBLY - Front seat, red	2	
	19943-28	F	HEADREST ASSEMBLY - Front seat, blue	2	
	19943-29	F	HEADREST ASSEMBLY - Front seat, tan	2	
-31	24247-02		HEADREST ASSEMBLY - Front seat, red, leather	2	24-3680 and up, 26-32 and up
	24247-03		HEADREST ASSEMBLY - Front seat, blue, leather	2	24-3680 and up, 26-32 and up
	24247-04	XYZ	HEADREST ASSEMBLY - Front seat, tan, leather	2	24-3680 and up, 26-32 and up
	24247-26	V	HEADREST ASSEMBLY - Front seat, russet, leather	2	
	24247-16	V	HEADREST ASSEMBLY - Front seat, russet, vinyl	2	
	24247-15	V	HEADREST ASSEMBLY - Front seat, blue, vinyl	2	
	24247-14	V	HEADREST ASSEMBLY - Front seat, red, vinyl	2	
-32	464 331	BDXY	HEADREST ASSEMBLY - Rear seat, silver (23052-05)	2	24-2844 to 24-3557 inclusive
	464 332	BDXY	HEADREST ASSEMBLY - Rear seat, tan (23052-00)	2	24-2844 to 24-3557 inclusive
	23469-12	DXYZ	HEADREST ASSEMBLY - Rear seat, red	2	24-3558 and up, 26-2 and up
	23469-13	DXYZ	HEADREST ASSEMBLY - Rear seat, blue	2	24-3558 and up, 26-2 and up
	23469-14	DXYZ	HEADREST ASSEMBLY - Rear seat, tan	2	24-3558 and up, 26-2 and up

A - Used on PA-24-180 and PA-24-250 with serial numbers 24-1 and up, PA-24-260 with serial numbers 24-3642, 24-4000 to 24-4246, 24-4248 to 24-4299 inclusive. and PA-24-400 with serial numbers 26-2 and up.
B - If Palm Beach Interior is installed, see Figure 8A for serial numbers 24-2844 to 24-3557 inclusive.
C - When ordering, specify color tan or silver and airplane serial number.
D - Optional equipment.
E - Used on PA-24-180 and PA-24-250 with serial numbers 24-1782 to 24-2174, 24-2176 to 24-2298 inclusive.
F - Used on PA-24-180 and PA-24-250 with serial numbers 24-3558 to 24-3679 inclusive, and PA-24-400 with serial numbers 26-2 to 26-31 inclusive.
G - Used on PA-24-180 and PA-24-250 with serial numbers 24-1978 to 24-2174, 24-2176 to 24-2298 inclusive.
V - Used on PA-24-260 airplanes only.
X - Used on PA-24-180 airplanes only.
Y - Used on PA-24-250 airplanes only.
Z - Used on PA-24-400 airplanes only.

Figure and Index Number	Part Number	Code	NOMENCLATURE	No. Req.	SERIAL NUMBERS AFFECTED
12-33	86062-92		TUBE - Seat back frame (headrest)	2	
-34	24245-00		FRAME - Headrest	2	
-35	19402-00		BUSHING - Headrest support, 3/4" I.D.	4	
-36	24246-00		BUSHING - Headrest support, 3/8" I.D.	4	
-37	31186-03	YZ	SHROUD ASSEMBLY - Safety belt fitting, front, sand	4	
	31186-04	VYZ	SHROUD ASSEMBLY - Safety belt fitting, front, red	4	
	31186-05	VYZ	SHROUD ASSEMBLY - Safety belt fitting, front, blue	4	
	31186-11	V	SHROUD ASSEMBLY - Safety belt fitting, front, russet	4	
	31186-13	YZ	SHROUD ASSEMBLY - Safety belt fitting, rear, sand	4	
	31186-14	VYZ	SHROUD ASSEMBLY - Safety belt fitting, rear, red	4	
	31186-15	VYZ	SHROUD ASSEMBLY - Safety belt fitting, rear, blue	4	
	31186-16	V	SHROUD ASSEMBLY - Safety belt fitting, rear, russet	4	
-38	24952-00	BV	CUSHION ASSEMBLY - Seat, "Comanche"	1	

A - Used on PA-24-180 and PA-24-250 with serial numbers 24-1 and up, PA-24-260 with serial numbers 24-3642, 24-4000 to 24-4246, 24-4248 to 24-4299 inclusive, and PA-24-400 with serial numbers 26-2 and up.
B - When ordering, specify color red, blue or russet and airplane serial number.
V - Used on PA-24-260 airplanes only.
Y - Used on PA-24-250 airplanes only.
Z - Used on PA-24-400 airplanes only.

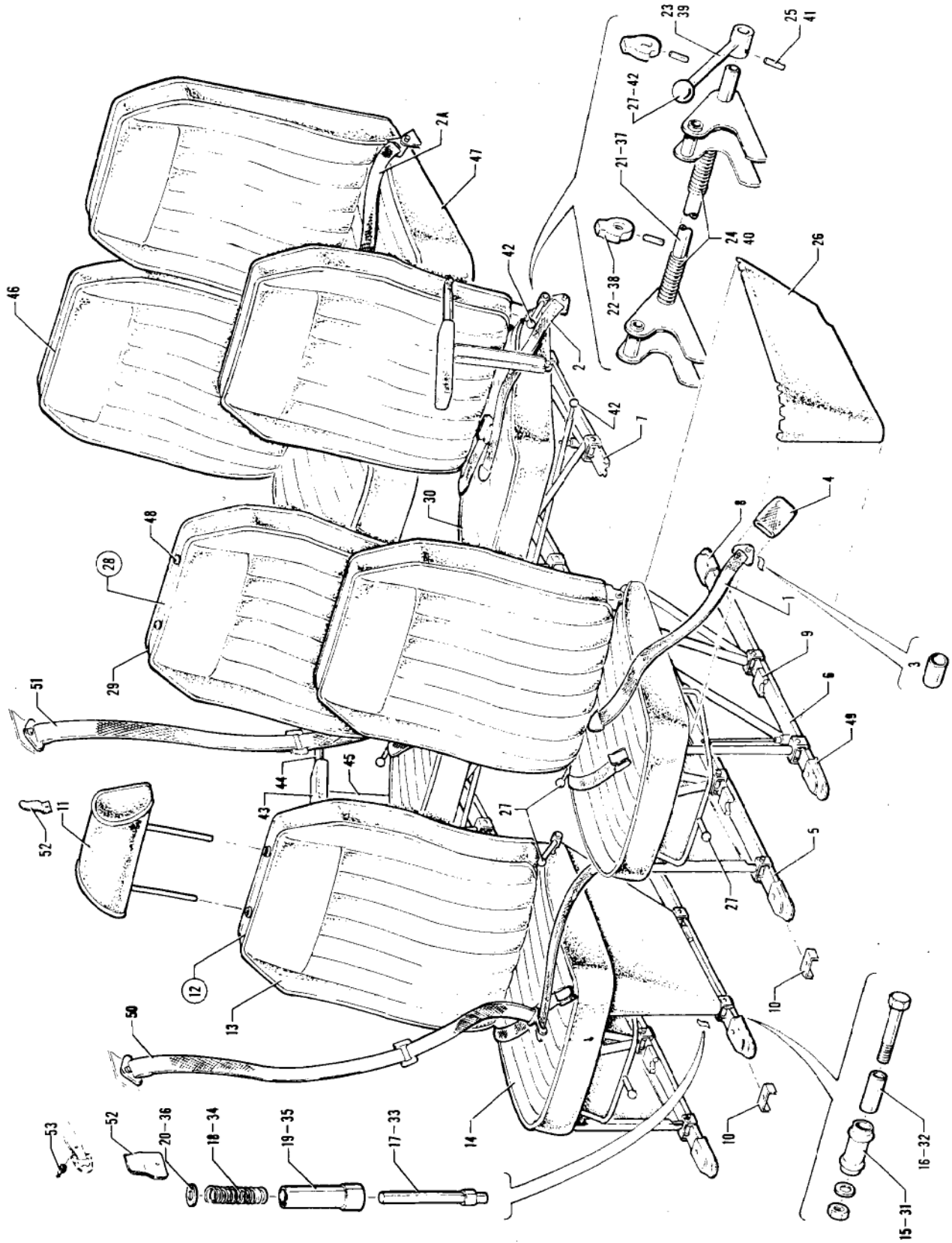

Figure 12A. Seats Installation
(Serial Nos. 24-4247, 24-4300 and up)

Figure and Index Number	Part Number	Code	NOMENCLATURE	No. Req.	SERIAL NUMBERS AFFECTED
12A-	25540	A	DRAWING - Seat Installation		
	26652		DRAWING - Seat Installation		24-4783, 24-4804 and up
	25302	A	DRAWING - Seat Installation (Fifth & Sixth)		
	26602		DRAWING - Seat Installation (Fifth & Sixth)		24-4783, 24-4804 and up
-1	13947-75	A	BELT ASSEMBLY - Safety, front, red (friction buckle)	2	
	13947-68	A	BELT ASSEMBLY - Safety, front, blue (friction buckle)	2	
	13947-46	A	BELT ASSEMBLY - Safety, front, brown (friction buckle)	2	
	13947-14	A	BELT ASSEMBLY - Safety, front, black (friction buckle)	2	
	25801-03	B	BELT ASSEMBLY - Safety, front, blue (metal to metal buckle)	2	
	25801-04	B	BELT ASSEMBLY - Safety, front, fawn (metal to metal buckle)	2	
	25801-02	B	BELT ASSEMBLY - Safety, front, black (metal to metal buckle)	2	
-2	13947-89	A	BELT ASSEMBLY - Safety, center, red (friction buckle)	2	
	13947-88	A	BELT ASSEMBLY - Safety, center, blue (friction buckle)	2	
	13947-87	A	BELT ASSEMBLY - Safety, center, brown (friction buckle)	2	
	13947-90	A	BELT ASSEMBLY - Safety, center, black (friction buckle)	2	
	25801-06	B	BELT ASSEMBLY - Safety, center, blue (metal to metal buckle)	2	
	25801-07	B	BELT ASSEMBLY - Safety, center, fawn (metal to metal buckle)	2	
	25801-05	B	BELT ASSEMBLY - Safety, center, black (metal to metal buckle)	2	
-2a	13947-76	A	BELT ASSEMBLY - Safety, rear, red (friction buckle)	2	
	13947-65	A	BELT ASSEMBLY - Safety, rear, blue (friction buckle)	2	
	13947-55	A	BELT ASSEMBLY - Safety, rear, brown (friction buckle)	2	
	13947-29	A	BELT ASSEMBLY - Safety, rear, black (friction buckle)	2	
	25801-11		BELT ASSEMBLY - Safety, rear, blue (metal to metal buckle)	2	
	25801-08		BELT ASSEMBLY - Safety, rear, fawn (metal to metal buckle)	2	
	25801-10		BELT ASSEMBLY - Safety, rear, black (metal to metal buckle)	2	
-3	14843-51		BUSHING - Safety belt	12	
-4	25598-03	A	SHROUD ASSEMBLY - Single safety belt fitting, brown	8	
	25598-00	A	SHROUD ASSEMBLY - Single safety belt fitting, red	8	
	25598-21		SHROUD ASSEMBLY - Single safety belt fitting, red	8	24-4783, 24-4804 and up
	25598-02		SHROUD ASSEMBLY - Single safety belt fitting, blue	8	
	25598-04		SHROUD ASSEMBLY - Single safety belt fitting, gold	8	
	25598-17		SHROUD ASSEMBLY - Single safety belt fitting, black	8	
	25598-25		SHROUD ASSEMBLY - Single safety belt fitting, white	8	24-4783, 24-4804 and up
	25598-07	A	SHROUD ASSEMBLY - Double safety belt fitting, brown	2	
	25598-05	A	SHROUD ASSEMBLY - Double safety belt fitting, red	2	
	25598-22		SHROUD ASSEMBLY - Double safety belt fitting, red	2	24-4783, 24-4804 and up
	25598-06		SHROUD ASSEMBLY - Double safety belt fitting, blue	2	
	25598-08		SHROUD ASSEMBLY - Double safety belt fitting, gold	2	
	25598-18		SHROUD ASSEMBLY - Double safety belt fitting, black	2	
	25598-26		SHROUD ASSEMBLY - Double safety belt fitting, white	2	24-4783, 24-4804 and up

A - Used on airplanes with serial numbers 24-4247, 24-4300 to 24-4782 inclusive, 24-4784 to 24-4803 inclusive.
B - Used if shoulder harness has not been installed.

When ordering, always specify Part Number, Description and Serial Number of Aircraft

Figure and Index Number	Part Number	Code	NOMENCLATURE	No. Req.	SERIAL NUMBERS AFFECTED
12A-5	21955-04		TRACK - Front seat, left, inboard	1	
	21955-02		TRACK - Front seat, right, inboard	1	
-6	21955-05		TRACK - Front seat, left, outboard	1	
	21955-03		TRACK - Front seat, right, outboard	1	
-7	25467-00		TRACK - Center seat	4	
-8	25552-00		COVER - Seat track end	8	
-9	18318-00		STOP - Seat	2	
-10	18842-00	A	STOP - Seat	2	
-11	25223-02	A	HEADREST ASSEMBLY - Vinyl, red	4	
	25223-03	A	HEADREST ASSEMBLY - Vinyl, blue	4	
	25223-04	A	HEADREST ASSEMBLY - Vinyl, brown	4	
	25223-24	A	HEADREST ASSEMBLY - Vinyl, black	4	
	25223-48	A	HEADREST ASSEMBLY - Vinyl, gold	4	
	32429-32		HEADREST ASSEMBLY - Vinyl, red	4	24-4783, 24-4804 and up
	32429-33		HEADREST ASSEMBLY - Vinyl, blue	4	24-4783, 24-4804 and up
	32429-34		HEADREST ASSEMBLY - Vinyl, white	4	24-4783, 24-4804 and up
	32429-35		HEADREST ASSEMBLY - Vinyl, black	4	24-4783, 24-4804 and up
	32429-36		HEADREST ASSEMBLY - Vinyl, gold	4	24-4783, 24-4804 and up
	25223-12	A	HEADREST ASSEMBLY - Leather, red	4	
	25223-15	A	HEADREST ASSEMBLY - Leather, blue	4	
	25223-18	A	HEADREST ASSEMBLY - Leather, brown	4	
	25223-21	A	HEADREST ASSEMBLY - Leather, gold	4	
	25223-25	A	HEADREST ASSEMBLY - Leather, black	4	
	32429-37		HEADREST ASSEMBLY - Leather, red	4	24-4783, 24-4804 and up
	32429-38		HEADREST ASSEMBLY - Leather, blue	4	24-4783, 24-4804 and up
	32429-39		HEADREST ASSEMBLY - Leather, white	4	24-4783, 24-4804 and up
	32429-40		HEADREST ASSEMBLY - Leather, black	4	24-4783, 24-4804 and up
	32429-41		HEADREST ASSEMBLY - Leather, gold	4	24-4783, 24-4804 and up
-12	25515-02	AB	SEAT ASSEMBLY - Front, left, vinyl	1	
	26617-00	DE	SEAT ASSEMBLY - Front, left, vinyl	1	24-4783, 24-4804 and up
	25515-04	ABC	SEAT ASSEMBLY - Front, left, leather	1	
	26617-02	CD	SEAT ASSEMBLY - Front, left, leather	1	24-4783, 24-4804 and up
	25515-03	AB	SEAT ASSEMBLY - Front, right, vinyl	1	
	26617-01	DE	SEAT ASSEMBLY - Front, right, vinyl	1	24-4783, 24-4804 and up
	25515-05	ABC	SEAT ASSEMBLY - Front, right, leather	1	
	26617-03	CD	SEAT ASSEMBLY - Front, right, leather	1	24-4783, 24-4804 and up
-13	25515-14	AB	CUSHION ASSEMBLY - Front, back, vinyl	1	
	26538-21	DE	CUSHION ASSEMBLY - Front, back, vinyl	1	24-4783, 24-4804 and up
	25515-15	ABC	CUSHION ASSEMBLY - Front, back, leather	1	
	26538-22	CD	CUSHION ASSEMBLY - Front, back, leather	1	24-4783, 24-4804 and up

Note: Refer to Figure 12B if vertically adjustable front seats are installed.

A - Used on airplanes with serial numbers 24-4247, 24-4300 to 24-4782 inclusive, 24-4784 to 24-4803 inclusive.
B - When ordering, specify color red, blue, brown, gold or black.
C - When ordering, specify leather or cloth insert.
D - When ordering, specify color red, blue, white, black or gold.
E - When ordering, specify vinyl or cloth insert.

Figure and Index Number	Part Number	Code	NOMENCLATURE	No. Req.	SERIAL NUMBERS AFFECTED
12A-14	25515-08	AB	CUSHION ASSEMBLY - Front, bottom, left, vinyl	1	
	26574-02	DE	CUSHION ASSEMBLY - Front, bottom, left, vinyl	1	24-4783, 24-4804 and up
	25515-10	ABC	CUSHION ASSEMBLY - Front, bottom, left, leather	1	
	26574-04	CD	CUSHION ASSEMBLY - Front, bottom, left, leather	1	24-4783, 24-4804 and up
	25515-09	AB	CUSHION ASSEMBLY - Front, bottom, right, vinyl	1	
	26574-03	DE	CUSHION ASSEMBLY - Front, bottom, right, vinyl	1	24-4783, 24-4804 and up
	25515-11	ABC	CUSHION ASSEMBLY - Front, bottom, right, leather	1	
	26574-05	CD	CUSHION ASSEMBLY - Front, bottom, right, leather	1	24-4783, 24-4804 and up
-15	18968-00		ROLLER - Seat	4	
-16	41413-38		BUSHING - Seat roller	4	
-17	12073-00		PLUNGER ASSEMBLY - Seat	2	
-18	50111-00		SPRING - Seat plunger	2	
-19	86102-56		BUSHING - Seat plunger	2	
-20	85012-30		WASHER - Seat plunger	2	
-21	25242-02	A	TUBE ASSEMBLY - Reclining mechanism	1	
	26453-05		TUBE ASSEMBLY - Reclining mechanism	1	24-4783, 24-4804 and up
-22	19365-00		CAM - Reclining seat	2	
-23	25285-00	A	LEVER ASSEMBLY - Seat adjustment	1	
	32380-00		HANDLE - Seat adjustment	1	24-4783, 24-4804 and up
-24	19336-00		SPRING - Seat back adjustment, inboard	1	
	19336-01		SPRING - Seat back adjustment, outboard	1	
-25	480 701		PIN - Roll (#59-028-125-0625)	3	
-26	25519-04	AB	SKIRT ASSEMBLY - Front seat, vinyl, left	1	
	25519-14	D	SKIRT ASSEMBLY - Front seat, vinyl, left	1	24-4783, 24-4804 and up
	25519-05	AB	SKIRT ASSEMBLY - Front seat, vinyl, right	1	
	25519-15	D	SKIRT ASSEMBLY - Front seat, vinyl, right	1	24-4783, 24-4804 and up
	25519-02	AB	SKIRT ASSEMBLY - Front seat, leather, left	1	
	25519-18	D	SKIRT ASSEMBLY - Front seat, leather, left	1	24-4783, 24-4804 and up
	25519-03	AB	SKIRT ASSEMBLY - Front seat, leather, right	1	
	25519-19	D	SKIRT ASSEMBLY - Front seat, leather, right	1	24-4783, 24-4804 and up
-27	471 093	A	KNOB - (#222) (3/4") White	2	
	571 109		KNOB - (#214)	1	24-4783, 24-4804 and up
-28	25550-02	AB	SEAT ASSEMBLY - Center, left, vinyl	1	
	26618-00	DE	SEAT ASSEMBLY - Center, left, vinyl	1	24-4783, 24-4804 and up
	25550-04	ABC	SEAT ASSEMBLY - Center, left, leather	1	
	26618-02	CD	SEAT ASSEMBLY - Center, left, leather	1	24-4783, 24-4804 and up
	25550-03	AB	SEAT ASSEMBLY - Center, right, vinyl	1	
	26618-01	DE	SEAT ASSEMBLY - Center, right, vinyl	1	24-4783, 24-4804 and up
	25550-05	ABC	SEAT ASSEMBLY - Center, right, leather	1	
	26618-03	CD	SEAT ASSEMBLY - Center, right, leather	1	24-4783, 24-4804 and up

Note: Refer to Figure 12B if vertically adjustable front seats are installed.

A - Used on airplanes with serial numbers 24-4247, 24-4300 to 24-4782 inclusive, 24-4784 to 24-4803 inclusive.
B - When ordering, specify color red, blue, brown, gold or black.
C - When ordering, specify leather or cloth insert.
D - When ordering, specify color red, blue, white, black or gold.
E - When ordering, specify vinyl or cloth insert.

Figure and Index Number	Part Number	Code	NOMENCLATURE	No. Req.	SERIAL NUMBERS AFFECTED
12A-29	25550-14	AB	CUSHION ASSEMBLY - Center, back, left, vinyl	1	
	26538-05	DE	CUSHION ASSEMBLY - Center, back, left, vinyl	1	24-4783, 24-4804 and up
	25550-15	AB	CUSHION ASSEMBLY - Center, back, right, vinyl	1	
	26538-06	DE	CUSHION ASSEMBLY - Center, back, right, vinyl	1	24-4783, 24-4804 and up
	25550-16	ABC	CUSHION ASSEMBLY - Center, back, left, leather	1	
	26538-07	CD	CUSHION ASSEMBLY - Center, back, left, leather	1	24-4783, 24-4804 and up
	25550-17	ABC	CUSHION ASSEMBLY - Center, back, right, leather	1	
	26538-08	CD	CUSHION ASSEMBLY - Center, back, right, leather	1	24-4783, 24-4804 and up
-30	25550-08	AB	CUSHION ASSEMBLY - Center, bottom, left, vinyl	1	
	26609-02	DE	CUSHION ASSEMBLY - Center, bottom, left, vinyl	1	24-4783, 24-4804 and up
	25550-09	AB	CUSHION ASSEMBLY - Center, bottom, right, vinyl	1	
	26609-03	DE	CUSHION ASSEMBLY - Center, bottom, right, vinyl	1	24-4783, 24-4804 and up
	25550-10	ABC	CUSHION ASSEMBLY - Center, bottom, left, leather	1	
	26609-04	CD	CUSHION ASSEMBLY - Center, bottom, left, leather	1	24-4783, 24-4804 and up
	25550-11	ABC	CUSHION ASSEMBLY - Center, bottom, right, leather	1	
	26609-05	CD	CUSHION ASSEMBLY - Center, bottom, right, leather	1	24-4783, 24-4804 and up
-31	18968-00		ROLLER - Seat	4	
-32	41413-38		BUSHING - Seat roller	4	
-33	12073-00		PLUNGER ASSEMBLY - Seat	1	
-34	50111-00		SPRING - Seat plunger	1	
-35	86102-56		BUSHING - Seat plunger	1	
-36	85012-30		WASHER - Seat plunger	1	
-37	25503-10	A	TUBE ASSEMBLY - Reclining mechanism	1	
	26453-05		TUBE ASSEMBLY - Reclining mechanism	1	24-4783, 24-4804 and up
-38	19365-00		CAM - Reclining seat	2	
-39	25285-00	A	LEVER ASSEMBLY - Seat adjustment	1	
	32380-00		HANDLE - Seat adjustment	1	24-4783, 24-4804 and up
-40	19336-00		SPRING - Seat back adjustment, inboard	1	
	19336-01		SPRING - Seat back adjustment, outboard	1	
-41	480 701		PIN - Roll (#59-028-125-0625)	3	
-42	471 093	A	KNOB - (#222) (3/4") White	2	
	571 109		KNOB - (#214)	1	24-4783, 24-4804 and up
-43	25482-04	A	ARMREST ASSEMBLY - Center seat, vinyl, brown	1	
	25482-02	A	ARMREST ASSEMBLY - Center seat, vinyl, red	1	
	25482-12		ARMREST ASSEMBLY - Center seat, vinyl, red	1	24-4783, 24-4804 and up
	25482-14		ARMREST ASSEMBLY - Center seat, leather, red	1	24-4783, 24-4804 and up
	25482-03		ARMREST ASSEMBLY - Center seat, vinyl, blue	1	
	25482-16		ARMREST ASSEMBLY - Center seat, leather, blue	1	24-4783, 24-4804 and up
	25482-18		ARMREST ASSEMBLY - Center seat, vinyl, gold	1	24-4783, 24-4804 and up
	25482-05		ARMREST ASSEMBLY - Center seat, leather, gold	1	
	25482-10		ARMREST ASSEMBLY - Center seat, vinyl, black	1	
	25482-20		ARMREST ASSEMBLY - Center seat, leather, black	1	24-4783, 24-4804 and up
-44	25454-00		TUBE ASSEMBLY - Armrest	1	
-45	25453-00		BRACKET - Armrest support	1	

A - Used on airplanes with serial numbers 24-4247, 24-4300 to 24-4782 inclusive, 24-4784 to 24-4803 inclusive.
B - When ordering, specify color red, blue, brown, gold or black.
C - When ordering, specify leather or cloth insert.
D - When ordering, specify color red, blue, white, black or gold.
E - When ordering, specify vinyl or cloth insert.

Figure and Index Number	Part Number	Code	NOMENCLATURE	No. Req.	SERIAL NUMBERS AFFECTED
12A-46	25535-02	AB	CUSHION ASSEMBLY - Seat back, rear, vinyl	2	
	26584-02	DE	CUSHION ASSEMBLY - Seat back, rear, vinyl	2	24-4783, 24-4804 and up
	25535-03	AB	CUSHION ASSEMBLY - Seat back, rear, leather	2	
	26584-03	CD	CUSHION ASSEMBLY - Seat back, rear, leather	2	24-4783, 24-4804 and up
	25535-23	AB	CUSHION ASSEMBLY - Seat back, rear, leather (cloth insert)	2	
-47	25534-02	AB	CUSHION ASSEMBLY - Seat bottom, rear, vinyl	2	
	26591-02	DE	CUSHION ASSEMBLY - Seat bottom, rear, vinyl	2	24-4783, 24-4804 and up
	25534-03	AB	CUSHION ASSEMBLY - Seat bottom, rear, leather	2	
	26591-03	CD	CUSHION ASSEMBLY - Seat bottom, rear, leather	2	24-4783, 24-4804 and up
	25534-18	AB	CUSHION ASSEMBLY - Seat bottom, rear, leather (cloth insert)	2	
-48	453 688		PLUG BUTTON - Seat back	8	24-4300 to 24-4314 inclusive
	453 661		PLUG BUTTON - Seat back	8	24-4315 and up
-49	25552-03		COVER - Seat track	4	24-4783, 24-4804 and up
-50	43813-07		HARNESS ASSEMBLY - Shoulder, front, black	2	
	43813-08		HARNESS ASSEMBLY - Shoulder, front, blue	2	
	43813-06		HARNESS ASSEMBLY - Shoulder, front, fawn	2	
	44762-04		HARNESS ASSEMBLY - Shoulder, inertia reel, front, black	2	24-4922 and up
-51	43813-04		HARNESS ASSEMBLY - Shoulder, center, black	2	
	43813-05		HARNESS ASSEMBLY - Shoulder, center, blue	2	
	43813-03		HARNESS ASSEMBLY - Shoulder, center, fawn	2	
	44762-03		HARNESS ASSEMBLY - Shoulder, inertia reel, center, black	2	24-4922 and up
-52	44512-00		CLIP - Shoulder harness retainer	3	24-4922 and up
	27252-00	F	CLIP ASSEMBLY - Shoulder harness retainer, right front	1	24-4922 and up
-53	487 560		STUD - (#XX-10369-12)	4	24-4922 and up

A - Used on airplanes with serial numbers 24-4247, 24-4300 to 24-4782 inclusive, 24-4784 to 24-4803 inclusive.
B - When ordering, specify color red, blue, brown, gold or black.
C - When ordering, specify leather or cloth insert.
D - When ordering, speciyf color red, blue, white, black or gold.
E - When ordering, specify vinyl or cloth insert.
F - When ordering, specify color beige or white.

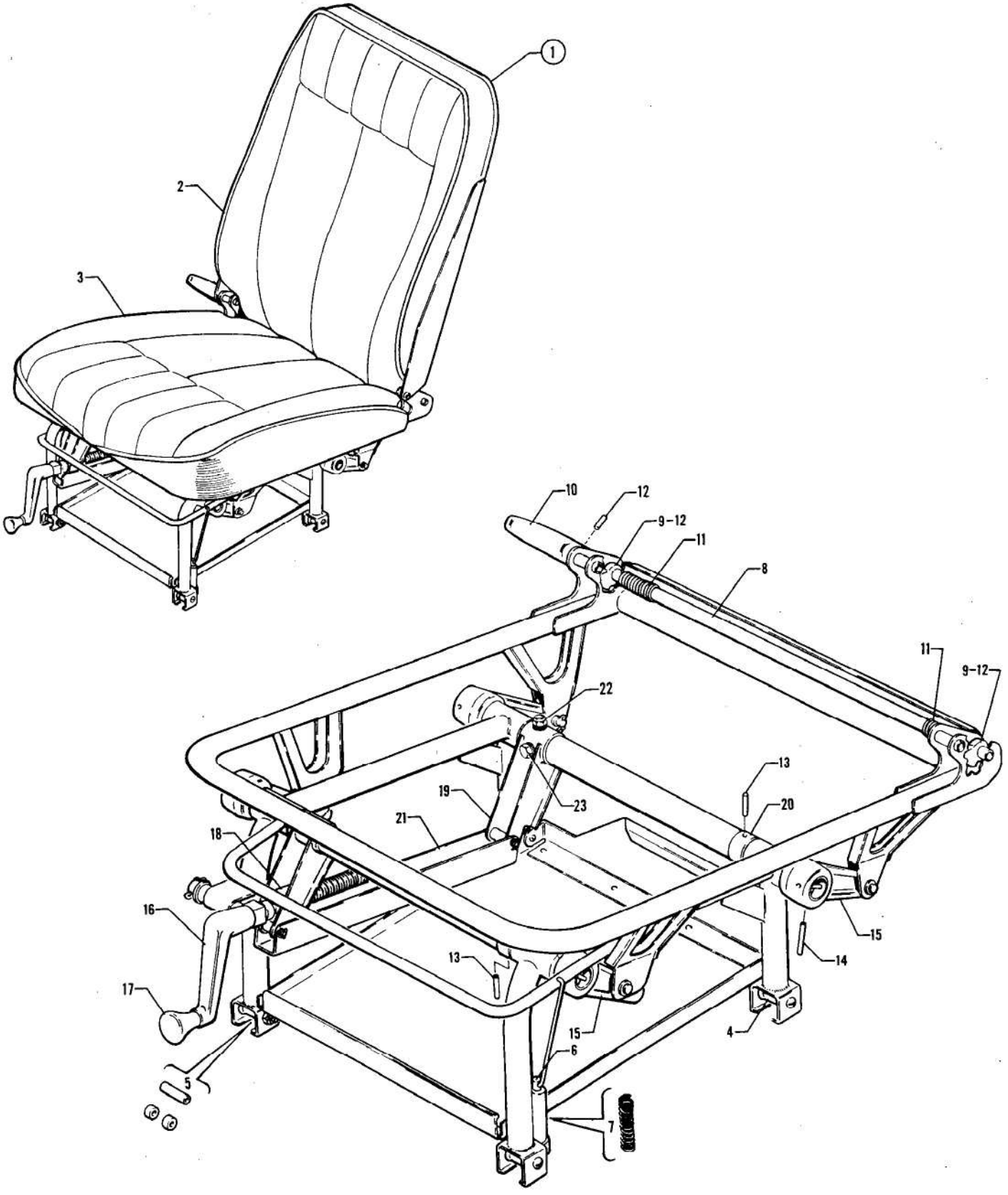

Figure 12B. Vertically Adjustable Seats Installation
(Serial Nos. 24-4783, 24-4804 and up)

Figure and Index Number	Part Number	Code	NOMENCLATURE	No. Req.	SERIAL NUMBERS AFFECTED
12B-	26971		DRAWING - Vertically Adjustable Seats Installation		
-1	26617-04	AB	SEAT ASSEMBLY - Left, vinyl	1	
	26617-05	AB	SEAT ASSEMBLY - Right, vinyl	1	
	26617-06	AC	SEAT ASSEMBLY - Left, leather	1	
	26617-07	AC	SEAT ASSEMBLY - Right, leather	1	
-2	26538-21	AB	CUSHION ASSEMBLY - Back, vinyl	1	
	26538-22	AC	CUSHION ASSEMBLY - Back, leather	1	
-3	26970-02	AB	CUSHION ASSEMBLY - Bottom, left, vinyl	1	
	26970-03	AB	CUSHION ASSEMBLY - Bottom, right, vinyl	1	
	26970-04	AC	CUSHION ASSEMBLY - Bottom, left, leather	1	
	26970-05	AC	CUSHION ASSEMBLY - Bottom, right, leather	1	
-4	18968-00		ROLLER - Seat (with one center bushing)	4	
	452 386	D	ROLLER - Seat (with two end bushings)	4	
-5	14175-43		BUSHING - Seat roller, center	4	
	63900-54	D	BUSHING - Seat roller, ends	8	
-6	12073-00		PLUNGER ASSEMBLY - Seat	2	
-7	50111-00		SPRING - Seat plunger	2	
-8	26453-05		TUBE ASSEMBLY - Reclining mechanism	1	
-9	19365-00		CAM - Reclining seat	2	
-10	32380-00		HANDLE - Seat back adjustment	1	
-11	19336-00		SPRING - Seat back adjustment, inboard	1	
	19336-01		SPRING - Seat back adjustment, outboard	1	
-12	480 701		PIN - Roll (#59-028-125-0625)	3	
-13	480 727	D	PIN - Roll (#52-028-125-1000)	2	
-14	480 690	D	PIN - Roll (#52-040-187-1250)	10	
-15	27018-00	D	ARM - Seat adjusting	4	
-16	26653-00	D	HANDLE ASSEMBLY - Seat vertical adjustment	1	
-17	571 131	D	KNOB - (#KN679D-1)	1	
-18	26952-00	D	BLOCK - Seat adjustment	1	
-19	26965-00	D	ANGLE ASSEMBLY - Seat adjustment	2	
-20	26953-00	D	BUSHING - Seat	2	
-21	26961-00	D	CHANNEL - Seat adjustment	1	
-22	27244-00		BOLT - Special	1	
	27245-00		WASHER - Special	1	
	407 565		WASHER - (AN960-416)	3	
	404 888		NUT - (MS20365-428C)	1	
-23	401 315		BOLT - (AN4-15A)	1	
	27245-00		WASHER - Special	4	
	404 888		NUT - (MS20365-428C)	1	

A - When ordering, specify color red, blue, white, black or gold.
B - When ordering, specify vinyl or cloth insert.
C - When ordering, specify leather or cloth insert.
D - These parts must be ordered from Service Spares Department, Piper Aircraft, Vero Beach, Florida.

When ordering, always specify Part Number, Description and Serial Number of Aircraft

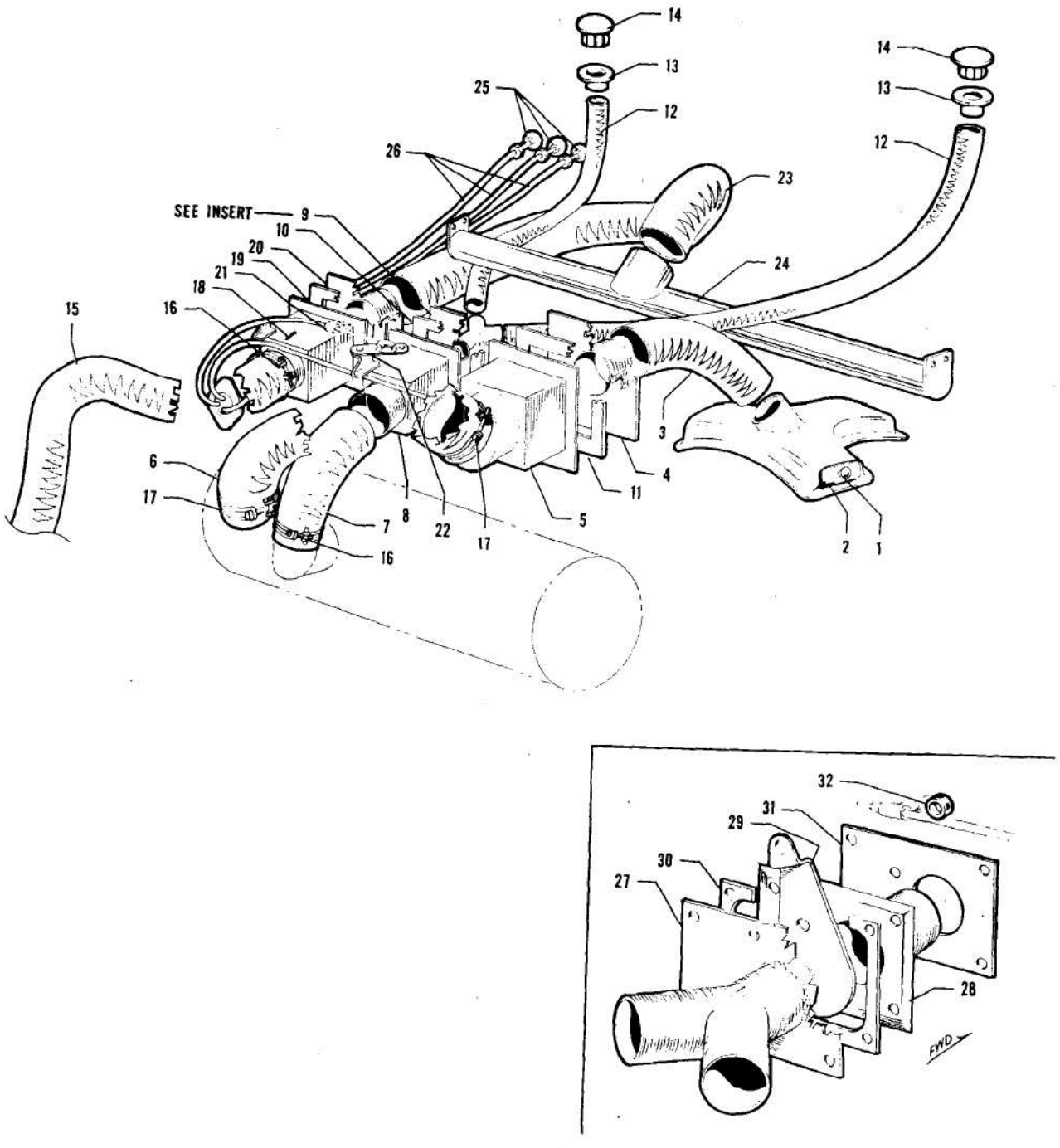

Figure 13. Cabin Heat, Defroster and Fresh Air Systems
(Serial Nos. 24-1 to 24-1251 inclusive)

Figure and Index Number	Part Number	Code	NOMENCLATURE	No. Req.	SERIAL NUMBERS AFFECTED
13-	21200		DRAWING - Engine Exhaust System Installation		24-1 to 24-102 inclusive
	21629		DRAWING - Engine Exhaust System Installation "180"		24-103 and up
	21668		DRAWING - Engine Exhaust System Installation "250"		
	21443		DRAWING - Cabin and Defroster Air Box Installation		
	21500		DRAWING - Cabin Hot Air Box Installation		24-1 to 24-1251 inclusive
	20940		DRAWING - Fuselage Assembly		
	21901		DRAWING - Cabin and Defroster Air Box Installation		
-1	471 051		KNOB - Cabin heat outlet, black	2	24-1 to 24-1251 inclusive
-2	21496-00		HINGE ASSEMBLY - Cabin heat outlet	2	24-1 to 24-1251 inclusive
-3	10525-59		HOSE - Cabin heat outlet, I. D. 2" L. 9"	1	24-1 to 24-1251 inclusive
-4	21495-00		TAKE-OFF ASSEMBLY - Cabin heat	1	24-1 to 24-102 inclusive
	21481-00		TAKE-OFF ASSEMBLY - Cabin heat	1	24-103 and up
-5	21260-00		BOX ASSEMBLY - Cabin heat	1	24-1 to 24-102 inclusive
	21647-00		BOX ASSEMBLY - Cabin heat	1	24-103 to 24-433 inclusive
	21647-05		BOX ASSEMBLY - Cabin heat	1	24-434 and up
-6	10525-60		HOSE - Cabin heat inlet, I. D. 3" L. 16-1/2"	1	24-1 to 24-102 inclusive
	10525-69		HOSE - Cabin heat inlet, I. D. 2" L. 13"	1	24-103 and up
-7	10525-59		HOSE - Defroster air inlet, I. D. 2" L. 9"	1	24-1 to 24-102 inclusive
	10525-68		HOSE - Defroster air inlet, I. D. 1" L. 9"	1	24-103 and up
-8	21268-00		BOX ASSEMBLY - Defroster air	1	24-1 to 24-102 inclusive
-9	21439-00		TAKE-OFF ASSEMBLY - Defroster air	1	24-1 to 24-102 inclusive
-10	21438-00		SEAL - Defroster air	1	24-1 to 24-102 inclusive
-11	21428-00		SEAL - Cabin heat	1	24-1 to 24-102 inclusive
	21480-00		SEAL - Cabin heat	1	24-103 to 24-464 inclusive
	21480-02		SEAL - Cabin heat	1	24-465 and up
-12	85052-26		TUBE - Defroster air outlet, left	1	
	85052-27		TUBE - Defroster air outlet, right	1	
-13	14149-00		TUBE ASSEMBLY - Defroster air outlet	2	
-14	21630-00		BUTTON - Plug, defroster air outlet	2	
-15	10525-67		HOSE - Cabin fresh air inlet, I. D. 2" L. 45"	1	
-16	454 895		CLAMP - Hose (H2-1800)	4	
-17	454 864		CLAMP - Hose (H3-1800)	2	
-18	21498-00		BOX ASSEMBLY - Cabin fresh air	1	24-1 to 24-102 inclusive
	21647-05		BOX ASSEMBLY - Cabin fresh air	1	24-103 and up
-19	21480-00		SEAL - Cabin fresh air	1	
-20	21481-00		TAKE-OFF ASSEMBLY - Cabin fresh air	1	
-21	13357-00		CLAMP	2	
-22	70371-00		FITTING ASSEMBLY - Swivel	3	
-23	10525-65		HOSE - Cabin fresh air inlet, I. D. 2" L. 28-1/2"	1	
-24	21482-00		BOX ASSEMBLY - Cabin fresh air distributor	1	
-25	18875-05		KNOB - Cabin heat, defroster and fresh air	3	
-26	41481-16		CONTROL - Cabin heat, defroster and fresh air	3	
-27	21570-00		TUBE ASSEMBLY - Defroster air outlet	1	24-103 and up
-28	21572-00		PLATE ASSEMBLY - Defroster air outlet	1	24-103 and up
-29	21573-00		VALVE - Defroster	1	24-103 and up
-30	21574-00		SPACER - Defroster air valve	1	24-103 and up
-31	21575-00		GASKET - Defroster air outlet tube	1	24-103 and up
-32	14976-10		BUSHING	1	24-103 and up

When ordering, always specify Part Number, Description and Serial Number of Aircraft

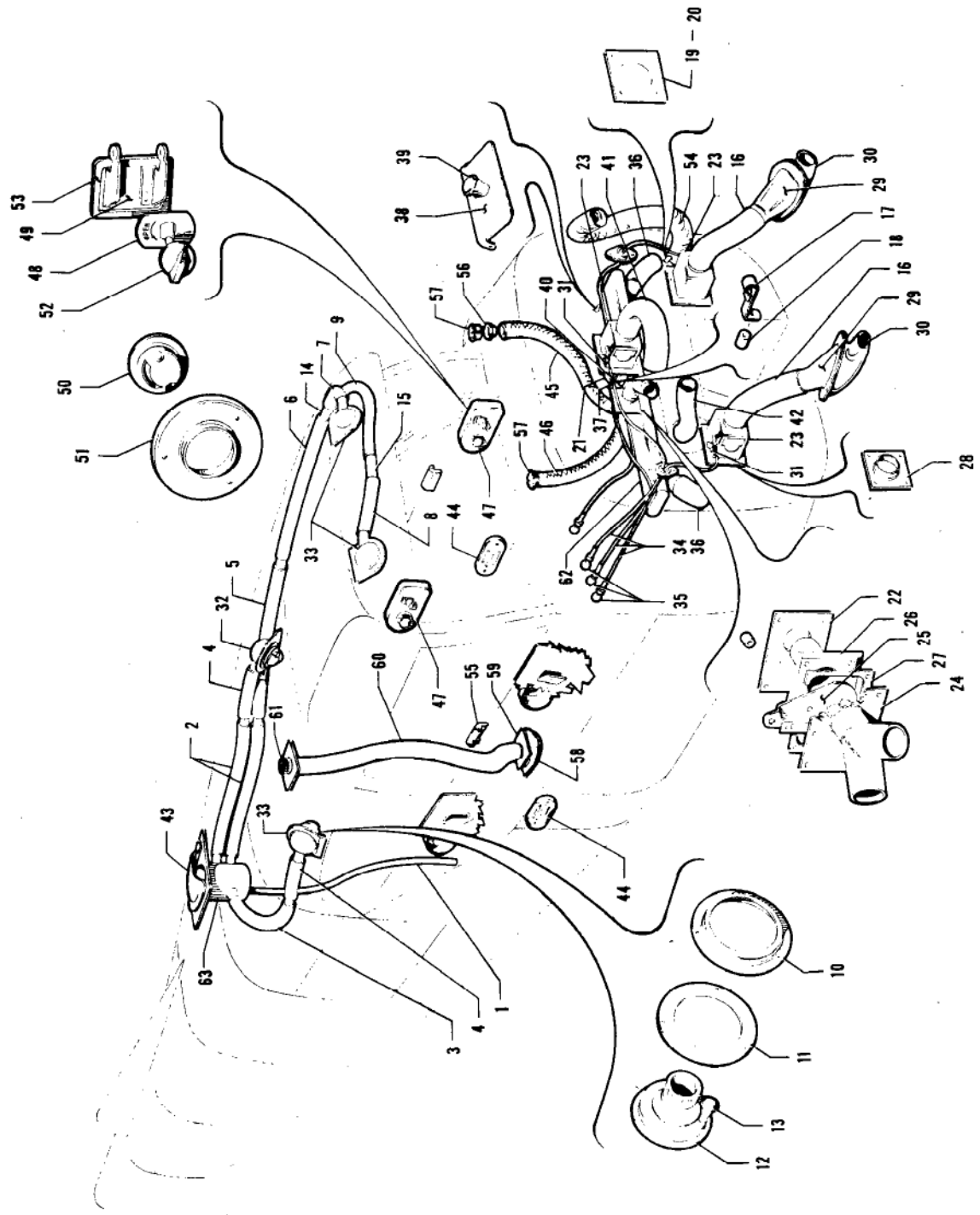

Figure 13A. Cabin Heat, Defroster and Ventilating System
(Serial Nos. 24-1252 to 24-2174, 24-2176 to 24-2298 inclusive)

Figure and Index Number	Part Number	Code	NOMENCLATURE	No. Req.	SERIAL NUMBERS AFFECTED
13A-	21939		DRAWING - Cabin Ventilating System Installation		
	21938		DRAWING - Cabin Air and Defroster Box Installation		
	21935		DRAWING - Cabin Air Box Installation		
	22125		DRAWING - Vent Installation, Cabin Air		24-2202 and up
	21901	C	DRAWING - Cabin Heat System Installation		
-1	13586-22	B	TUBE - Cabin air distribution box drain	1	
-2	13586-69	B	TUBE - Cabin air distribution	2	
-3	13586-70	B	TUBE - Cabin air distribution	1	
-4	13586-71	B	TUBE - Cabin air distribution	2	
-5	13586-72	B	TUBE - Cabin air distribution	1	
-6	13586-73	B	TUBE - Cabin air distribution	1	
-7	13586-74	B	TUBE - Cabin air distribution	1	
-8	13586-75	B	TUBE - Cabin air distribution	1	
-9	13586-76	B	TUBE - Cabin air distribution	1	
-10	19377-00	B	RING - Retainer	4	
-11	19378-00	B	GASKET - Moleskin	4	
-12	19380-05		NOZZLE ASSEMBLY - Ventilator, gray, knob adjustment	4	
	19380-06		NOZZLE ASSEMBLY - Ventilator, white, knob adjustment	4	
	30957-00		NOZZLE ASSEMBLY - Ventilator, white, finger grip adjustment	4	
-13	471 059	B	KNOB - Ventilator control (#3001-SD)	1	
-14	21945-00	B	TUBE ASSEMBLY - Air distribution	1	
-15	82352-50	B	TUBE - Cabin air distribution	1	
-16	10525-84	B	TUBE - Cabin air inlet	2	
-17	13357-00	B	CLAMP - Control cable	2	
-18	14976-10	B	BUSHING - Control cable clamp spacer	1	
-19	21480-00	B	GASKET - Cabin air box	2	
-20	21480-02	B	GASKET - Cabin air box	1	
-21	21481-00	C	TAKE-OFF ASSEMBLY - Cabin air	1	
-22	21575-00	C	GASKET - Defroster air outlet tube	1	
-23	21647-05	B	BOX ASSEMBLY - Cabin air	3	
-24	21570-00	C	TUBE ASSEMBLY - Defroster air outlet	1	
-25	21572-00	C	PLATE ASSEMBLY - Defroster air outlet	1	
-26	21573-00	C	VALVE - Defroster	1	
-27	21574-00	C	SPACER - Defroster air valve	1	
-28	21931-00	B	PLATE - Cabin air outlet cover	1	
-29	21932-00	B	TUBE - Cabin air inlet	2	
-30	21933-00	B	SCOOP - Cabin air inlet	2	
-31	70371-00	A	FITTING ASSEMBLY - Swivel	4	
-32	21922-01	B	BOX ASSEMBLY - Ventilator mounting, left	1	
-33	21922-00	B	BOX ASSEMBLY - Ventilator mounting	3	
-34	41481-16	A	CABLE - Cabin air control	4	
-35	18875-05	A	KNOB - Cabin air control cable	4	
-36	10525-82	C	HOSE - Cabin heat inlet, I.D. 2" L. 5"	2	
-37	10525-83	C	HOSE - Cabin heat inlet, I.D. 2" L. 10"	1	
-38	21886-00	C	DOOR ASSEMBLY - Cabin hot air inlet	2	

A - Two used on 24-1252 to 24-1329 inclusive.
B - Used on airplanes with serial numbers 24-1330 and up.
C - Used on airplanes with serial numbers 24-1252 and up.

Figure and Index Number	Part Number	Code	NOMENCLATURE	No. Req.	SERIAL NUMBERS AFFECTED
13A-39	471 060	A	KNOB - Cabin hot air outlet door (#3304SM)	1	
-40	10525-72	A	HOSE - Defroster inlet, I.D. 1" L. 10"	1	
-41	10525-69	A	HOSE - Cabin hot air inlet, I.D. 2" L. 13"	1	
-42	10525-19	A	HOSE - Ram air inlet, I.D. 2" L. 19"	1	
-43	18405-00	B	SCOOP - Cabin air	1	
-44	21890-00	A	GRILL - Cabin hot air duct	1	
-45	85052-26	A	TUBE - Defroster outlet	1	
-46	85052-27	A	TUBE - Defroster outlet	1	
-47	754 203		KIT - Ventilator box assembly, black (21160-00)	4	
-48	21257-00		PLACARD - Ventilator control knob, black	1	24-1 to 24-1476 inclusive
	21257-02	C	PLACARD - Ventilator control knob, gray	1	
-49	21159-00		DOOR ASSEMBLY - Ventilator	1	
-50	21154-00		DEFLECTOR - Air, black	1	24-1 to 24-1476 inclusive
	21154-02	C	DEFLECTOR - Air, gray	1	
-51	21156-00		PLATE - Ventilator air deflector	1	
-52	754 181		KNOB - Vent box	1	
-53	21407-00		SEAL - Vent box		
-54	22502-25	A	HOSE - Air inlet, left, "250" I.D. 2" L. 40"	1	
	10525-86	A	HOSE - Air inlet, left, "180" I.D. 2" L. 21"	1	
-55	22030-00	B	PLATE - Defroster air outlet	2	
-56	14149-00	A	TUBE ASSEMBLY - Defroster air outlet	2	
-57	21630-00	A	BUTTON - Defroster air outlet	2	
-58	22117-00	D	SCOOP - Cabin air	1	
-59	22122-00	D	TAKE-OFF ASSEMBLY - Cabin air exhaust	2	
-60	10525-93	D	HOSE - Air duct, I.D. 3" L. 66"	1	
-61	22121-00	D	SCREEN - Cabin air exhaust	1	
-62	21892-00		DUCT ASSEMBLY - Cabin hot air	1	24-1 to 24-1476 inclusive
	22185-00		DUCT ASSEMBLY - Cabin hot air	1	24-1477 and up
-63	19477-08		BOX ASSEMBLY - Air distributor	1	

A - Used on airplanes with serial numbers 24-1252 and up.
B - Used on airplanes with serial numbers 24-1330 and up.
C - Used on airplanes with serial numbers 24-1477 and up.
D - Used on airplanes with serial numbers 24-2202 and up.

When ordering, always specify Part Number, Description and Serial Number of Aircraft

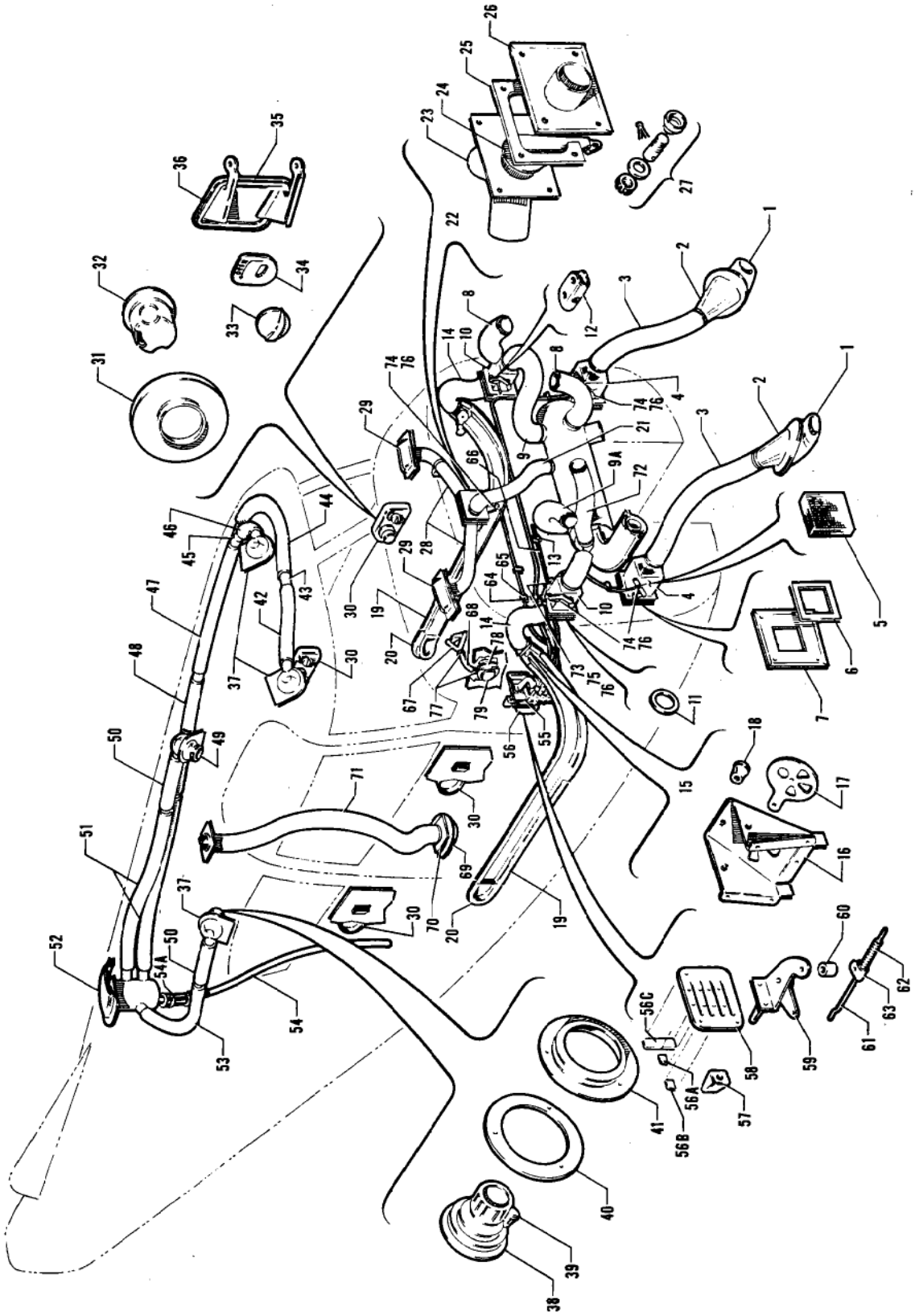

Figure 13B. Cabin Heat, Defroster and Ventilating System
(Serial Nos. 24-2175, 24-2299 and up)

Figure and Index Number	Part Number	Code	NOMENCLATURE	No. Req.	SERIAL NUMBERS AFFECTED
13B-	22410		DRAWING - Cabin Heat, Ventilating and Defroster Installation		
	21939		DRAWING - Cabin Ventilating System Installation		
	21935		DRAWING - Cabin Air Box Installation		
	22125		DRAWING - Vent Installation, Cabin Air		
-1	21933-00		SCOOP - Cabin air inlet	2	
-2	21932-00		TUBE - Cabin air inlet	2	
-3	10525-37		HOSE - Cabin air inlet, I.D. 2" L. 15-1/2"	2	
	10525-76		HOSE - Cabin air inlet, I.D. 2" L. 18"	2	
-4	22492-00		BOX ASSEMBLY - Cabin air	2	
-5	22492-03		FILTER - Cabin air box	2	
-6	22487-00		SEAL - Cabin air box	2	
-7	22484-00		PLATE Cabin air box trim	2	
-8	10525-86		HOSE - Air inlet, "180" I.D. 2" L. 21"	1	
	10525-58		HOSE - Air inlet, "250" I.D. 3" L. 14"	1	24-1 to 24-2843 inclusive
	22502-18		HOSE - Air inlet, "250" I.D. 3" L. 14"	1	24-2844 and up
-9	10525-76		HOSE - Cabin hot air inlet, right, I.D. 2" L. 18"	1	
-9a	10525-84		HOSE - Cabin hot air inlet, left, I.D. 2" L. 16"	1	
-10	22343-00		BOX ASSEMBLY - Cabin air	2	
-11	19513-31		WASHER	2	
-12	22301-00		BRACKET - Heat box torque tube attachment	1	
-13	22304-00		PLATE - Heat box torque tube attachment	1	
-14	22339-00		HOSE ASSEMBLY - Cabin hot air inlet	2	
-15	22337-00		BOX ASSEMBLY - Cabin hot air outlet	4	
-16	22336-00		BOX - Cabin hot air outlet	1	
-17	22334-00		VALVE - Cabin hot air outlet	1	
-18	471 059		KNOB - Valve	1	
-19	22338-00		DUCT - Cabin hot air, left	1	
	22338-01		DUCT - Cabin hot air, right	1	
-20	22289-00		OUTLET - Cabin heat	2	
-21	22502-05		HOSE - Defroster air outlet, L. 22-1/2", "250"	1	
	22502-04		HOSE - Defroster air outlet, L. 18", "180"	1	
-22	22363-00		VALVE ASSEMBLY - Defroster	1	
-23	22353-00		TUBE ASSEMBLY - Defroster air outlet	1	
-24	22354-00		VALVE - Defroster	1	
-25	21574-00		SPACER - Defroster air valve	1	
-26	22352-00		PLATE ASSEMBLY - Defroster air outlet	1	
-27	70371-00		FITTING ASSEMBLY - Swivel, complete	3	
-28	22374-02		HOSE ASSEMBLY - Defroster air outlet, left	1	
	22374-03		HOSE ASSEMBLY - Defroster air outlet, right	1	
-29	22295-00		OUTLET - Defroster air	2	
-30	754 203		KIT - Ventilator box assembly, black (21160-00)	4	
-31	21156-00		PLATE - Ventilator air deflector	1	
-32	21154-02	A	DEFLECTOR - Air, gray	1	
	21154-03	A	DEFLECTOR - Air, dark brown	1	
	21154-04	A	DEFLECTOR - Air, light charcoal	1	
-33	754 181	A	KNOB - Ventilator box, black	1	
	471 079	A	KNOB - Ventilator box, gray	1	
	471 095	A	KNOB - Ventilator box, dark brown	1	
	471 096	A	KNOB - Ventilator box, charcoal	1	
	23459-00		KNOB - Ventilator box, red	1	24-3558 and up
			A - If Palm Beach Interior is installed, see Figure 8A.		

When ordering, always specify Part Number, Description and Serial Number of Aircraft

Figure and Index Number	Part Number	Code	NOMENCLATURE	No. Req.	SERIAL NUMBERS AFFECTED
13B-34	21257-02	A	PLACARD - Ventilator control knob, gray	1	
	21257-03	A	PLACARD - Ventilator control knob, tan	1	
	21257-04	A	PLACARD - Ventilator control knob, dark brown	1	
	21257-07		PLACARD - Ventilator control knob, red	1	24-3558 and up
	21257-08		PLACARD - Ventilator control knob, blue	1	24-3558 and up
-35	21159-00		DOOR ASSEMBLY - Ventilator	1	
-36	21407-00		SEAL - Ventilator box door	1	
-37	21922-00		BOX ASSEMBLY - Ventilator mounting	3	
-38	19380-05		NOZZLE ASSEMBLY - Ventilator, gray, knob adjustment	4	
	19380-06		NOZZLE ASSEMBLY - Ventilator, white, knob adjustment	4	
	30957-00		NOZZLE ASSEMBLY - Ventilator, white, finger grip adjustment	4	
-39	471 059		KNOB - Ventilator control, black	1	
	471 082		KNOB - Ventilator control, gray	1	
	471 097		KNOB - Ventilator control, white	1	
-40	19378-02		GASKET - Moleskin	4	
-41	19377-00		RING - Retainer	4	
-42	13586-75		TUBE - Cabin air distribution	1	
-43	82352-50		TUBE - Cabin air distribution	1	
-44	13586-76		TUBE - Cabin air distribution	1	
-45	21945-00		TUBE ASSEMBLY - Air distribution	1	
-46	13586-74		TUBE - Cabin air distribution	1	
-47	13586-73		TUBE - Cabin air distribution	1	
-48	13586-72		TUBE - Cabin air distribution	1	
-49	21922-01		BOX ASSEMBLY - Ventilator mounting, left	1	
-50	13586-71		TUBE - Cabin air distribution	2	
-51	13586-69		TUBE - Cabin air distribution	2	
-52	18405-00		SCOOP - Cabin air	1	
-53	13586-70		TUBE - Cabin air distribution	1	
-54	13586-85		TUBE - Cabin air distribution box drain	1	24-1 to 24-3208 inclusive
	23339-02		TUBE - Beaded cabin air distribution box drain	1	24-3209 and up
-54a	16633-37		HOSE - Flexible, cabin air distribution box drain	1	24-3209 and up
-55	22463-00		CONTROLS ASSEMBLY - Cabin air	1	
-56	22459-00		PLATE - Cabin air control cover	1	
-56a	24960-00		PLACARD - Off	1	
-56b	24982-00		PLACARD - On	1	
-56c	24983-00		PLACARD - Heater control	1	
-57	22287-00		KNOB ASSEMBLY - Control	4	
-58	22460-00		PLATE - Cabin air control guide	1	
-59	22433-00		ARM ASSEMBLY - Control cable actuator	4	
-60	61402-24		BUSHING - Control arm spacer	3	
-61	22470-02		WIRE - Control, cabin air, left	1	
	22470-03		WIRE - Control, cabin air, right	1	
	22470-04		WIRE - Control, cabin heat	1	
	22470-05		WIRE - Control, defroster	1	
-62	22472-02		HOUSING - Control wire, cabin air, left	1	
	22472-03		HOUSING - Control wire, cabin air, right	1	
	22472-04		HOUSING - Control wire, cabin heat	1	
	22472-05		HOUSING - Control wire, defroster	1	
-63	454 887		CLAMP - Control cable	4	
-64	406 380		NUT - Tinnerman (A10733-1024-1)	6	
-65	19513-24		WASHER - Firewall, spacer	3	
-66	22305-00		TUBE ASSEMBLY - Heat box torque	1	
			A - If Palm Beach Interior is installed, see Figure 8A.		

When ordering, always specify Part Number, Description and Serial Number of Aircraft

Figure and Index Number	Part Number	Code	NOMENCLATURE	No. Req.	SERIAL NUMBERS AFFECTED
13B-67	22486-00	A	TUBE ASSEMBLY - Radio cooling	1	
	22622-00		TUBE ASSEMBLY - Radio cooling	1	24-2603 to 24-3564 inclusive, 24-3566 to 24-3594 inclusive
	23718-00		TUBE ASSEMBLY - Radio cooling	1	24-3565, 24-3595 to 24-3687
	24657-00		TUBE ASSEMBLY - Radio cooling	1	24-3688 and up
-68	82371-93		HOSE - Radio cooling	1	
-69	22117-00		SCOOP - Cabin air exhaust	1	
-70	22122-00		TAKE-OFF ASSEMBLY - Cabin air exhaust	1	
-71	10525-93		HOSE - Cabin air exhaust, I.D. 3" L. 66"	1	
-72	10525-19		HOSE - Engine baffle to shroud	1	
-73	91193-00		FITTING - Swivel	1	
-74	70371-03		STUD	1	
-75	408 803		WASHER - Spring (#3515-14-06)	1	
-76	81342-19		WASHER	1	
-77	454 987		CLAMP - Hose, radio cooling	2	
-78	22478-00		BOX ASSEMBLY - Ventilator, radio cooling	1	
-79	22482-00		SCOOP - Air, radio cooling	1	

A - Used on airplanes with serial numbers 24-2175, 24-2299 to 24-2602 inclusive.

When ordering, always specify Part Number, Description and Serial Number of Aircraft

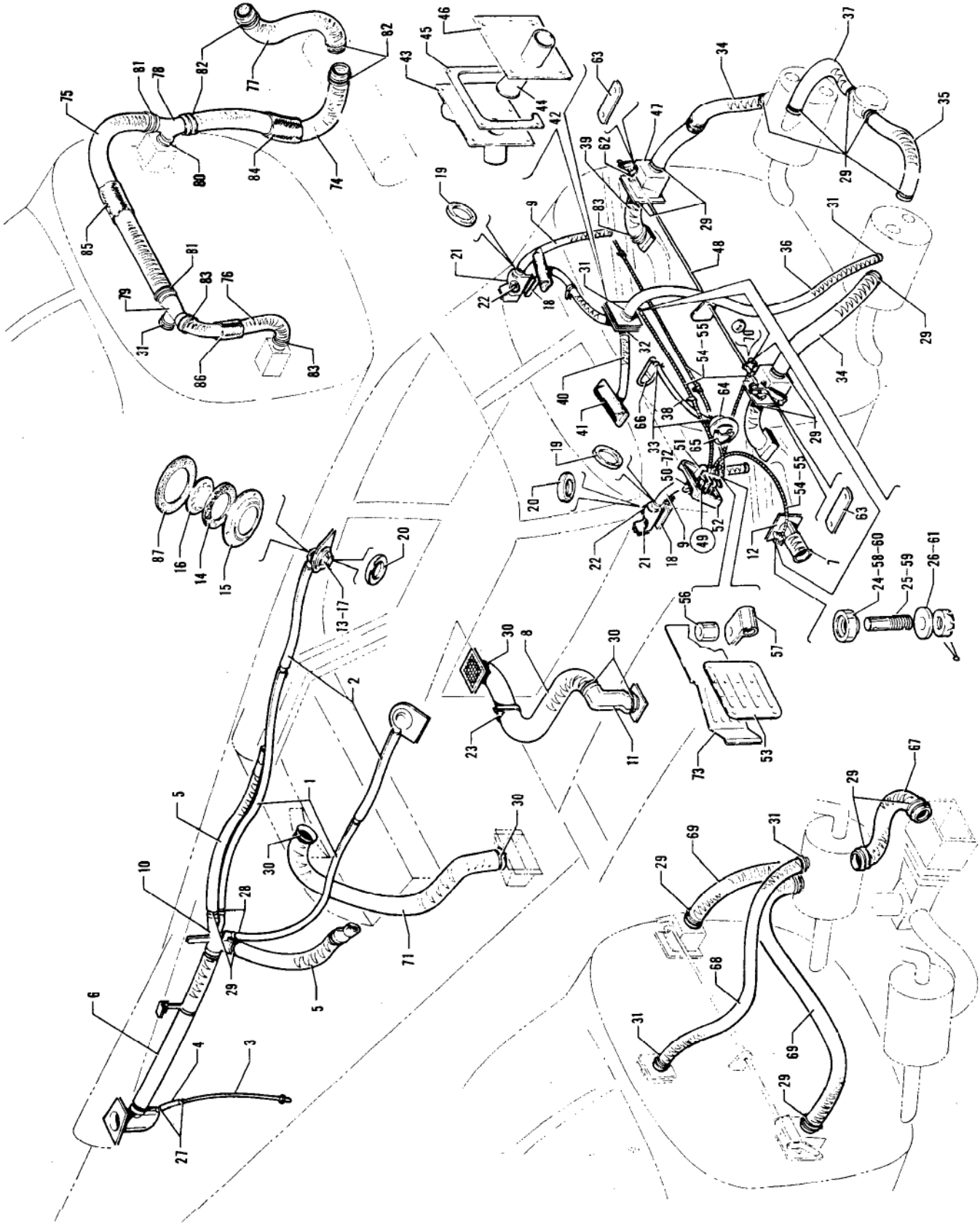

Figure 13C. Cabin Heat, Defroster and Ventilating System

Figure and Index Number	Part Number	Code	NOMENCLATURE	No. Req.	SERIAL NUMBERS AFFECTED
13C-	24499	B	DRAWING - Cabin Heat System Installation		
	26685		DRAWING - Cabin Heat System Installation		24-4783, 24-4804 and up
	24265	A	DRAWING - Cabin Ventilating System Installation		
	25386	V	DRAWING - Cabin Ventilating System Installation		24-4247, 24-4300 and up
	26847	V	DRAWING - Heater System Installation		24-4783, 24-4804 and up
-1	13586-70	A	TUBE - Cabin air distribution	2	
-2	13586-76	A	TUBE - Cabin air distribution	2	
	22369-27	V	TUBE - Cabin air distribution	2	24-4247, 24-4300 and up
-3	23339-04		TUBE - Cabin air distribution box drain	1	
-4	16633-37		HOSE - Cabin air distribution box drain	1	
-5	22502-46	A	HOSE - Cabin air distribution	2	
	10525-66	V	HOSE - Cabin air distribution	2	24-4247, 24-4300 and up
-6	22502-56	A	HOSE - Cabin air distribution	1	
	10525-73	V	HOSE - Cabin air distribution	1	24-4247, 24-4300 and up
-7	10525-14		HOSE - Cabin air inlet	2	
-8	10525-100	A	HOSE - Cabin air exhaust	1	
-9	22502-04		HOSE - Cabin air distribution	2	
-10	24433-00	A	TUBE ASSEMBLY - Cabin air distribution	1	
	25376-00	V	TUBE ASSEMBLY - Cabin air distribution	1	24-4247, 24-4300 and up
-11	24766-00	A	TUBE ASSEMBLY - Cabin air exhaust	1	
-12	24720-00		VALVE ASSEMBLY - Cabin air, left	1	
	24720-01		VALVE ASSEMBLY - Cabin air, right	1	
-13	24323-00	A	VALVE ASSEMBLY - Cabin air	2	
	25573-00	C	VALVE ASSEMBLY - Cabin air (gasper type)	2	
	26448-00	V	VALVE ASSEMBLY - Cabin air (complete)	2	24-4783, 24-4804 and up
-14	19513-75	A	SEAL - Valve assembly	1	
	25572-00	C	GASKET - Valve assembly	1	
-15	24737-00	A	RING - Retaining	1	
	25571-00	C	PLATE - Retaining	1	
	26432-00	V	PLATE - Air valve	1	24-4783, 24-4804 and up
-16	31429-00	A	WASHER - Valve assembly	1	
-17	26569-00	V	VALVE ASSEMBLY - Cabin air	1	24-4783, 24-4804 and up
-18	24284-00	B	PLATE - Air outlet, left	1	
	24285-00	B	PLATE - Air outlet, right	1	
-19	19513-70		WASHER - Air outlet box spacer	2	
-20	24298-02	Z	COVER - Air valve, gray	4	
	24298-03	Z	COVER - Air valve, brown	4	
	24298-04	V	COVER - Air valve, sand	4	24-3642, 24-4000 to 24-4246 incl., 24-4248 to 24-4299 inclusive

A - Used on PA-24-260 with serial numbers 24-3642, 24-4000 to 24-4246 inclusive, 24-4248 to 24-4299 inclusive, and PA-24-400 with serial numbers 26-2 and up.
B - Used on PA-24-260 with serial numbers 24-3642, 24-4000 to 24-4782 inclusive, 24-4784 to 24-4803 inclusive, and PA-24-400 with serial numbers 26-2 and up.
C - Used on PA-24-260 with serial numbers 24-4247, 24-4300 to 24-4782, 24-4784 to 24-4803 inclusive.
V - Used on PA-24-260 airplanes only.
Z - Used on PA-24-400 airplanes only.

Figure and Index Number	Part Number	Code	NOMENCLATURE	No. Req.	SERIAL NUMBERS AFFECTED
13C-21	24307-00	Z	BOX ASSEMBLY - Cabin air outlet, gray, left	1	
	24307-02	Z	BOX ASSEMBLY - Cabin air outlet, brown, left	1	
	24307-03	V	BOX ASSEMBLY - Cabin air outlet, brown, left	1	24-3642, 24-4000 to 24-4412 incl.
	25574-00	C	BOX ASSEMBLY - Cabin air outlet, beige, left	1	
	26613-00	V	BOX ASSEMBLY - Cabin air outlet, beige, left	1	24-4783, 24-4804 and up
	26613-02	V	BOX ASSEMBLY - Cabin air outlet, white, left	1	24-4783, 24-4804 and up
	24308-00	Z	BOX ASSEMBLY - Cabin air outlet, gray, right	1	
	24308-02	Z	BOX ASSEMBLY - Cabin air outlet, brown, right	1	
	24308-03	V	BOX ASSEMBLY - Cabin air outlet, brown, right	1	24-3642, 24-4000 to 24-4412 incl.
	25580-00	C	BOX ASSEMBLY - Cabin air outlet, beige, right	1	
	26630-00	V	BOX ASSEMBLY - Cabin air outlet, beige, right	1	24-4783, 24-4804 and up
	26630-02	V	BOX ASSEMBLY - Cabin air outlet, white, right	1	24-4783, 24-4804 and up
-22	492 082	Z	VALVE ASSEMBLY - Cabin air outlet box	1	
	492 082	V	VALVE ASSEMBLY - Cabin air outlet box	1	24-3642, 24-4000 to 24-4412 incl.
	462 006	V	GASPER ASSEMBLY - Cabin air outlet box	1	24-4413 and up
-23	80032-44	Z	CLAMP - Exhaust hose	1	
-24	70371-02		FITTING - Swivel, cabin air valve	2	
-25	70371-03		STUD - Swivel fitting, cabin air valve	2	
-26	81342-19		WASHER - Swivel fitting, cabin air valve	2	
-27	454 983		CLAMP - Hose (#8)	2	
-28	454 805	A	CLAMP - Hose (#16)	2	
-29	454 895		CLAMP - Hose (#H-2-1800)	11	
-30	454 864		CLAMP - Hose (#H-3-1800)	3	
-31	454 981		CLAMP - Hose (#H-1-5160)	2	
-32	454 860	B	CLAMP - Hose (#H-1-1800)	2	
-33	454 987	D	CLAMP - Hose (#12)	2	
-34	22502-03	Z	HOSE - Cabin heat inlet	2	
-35	22502-35	Z	HOSE - Muffler shroud air inlet, right	1	
-36	22502-49	Z	HOSE - Defroster air inlet	1	
-37	22502-50	Z	HOSE - Muffler shroud air inlet, left	1	
-38	82371-93	D	HOSE - Radio cooling	1	
-39	22339-00	B	TUBE ASSEMBLY - Cabin heat inlet	2	
	10525-83	V	TUBE ASSEMBLY - Cabin heat inlet	2	24-4783, 24-4804 and up
-20	22374-02		HOSE ASSEMBLY - Defroster air outlet, left	1	
	22374-03		HOSE ASSEMBLY - Defroster air outlet, right	1	
-41	22295-00		OUTLET - Defroster air	2	
-42	22363-00		VALVE ASSEMBLY - Defroster (complete)	1	
-43	22353-00		TUBE ASSEMBLY - Defroster air outlet	1	
-44	22354-00		VALVE - Defroster	1	
-45	21574-00		SPACER - Defroster air valve	1	
-46	22352-00		PLATE ASSEMBLY - Defroster air outlet	1	

A - Used on PA-24-260 with serial numbers 24-3642, 24-4000 to 24-4246 inclusive, 24-4248 to 24-4299 inclusive, and PA-24-400 with serial numbers 26-2 and up.

B - Used on PA-24-260 with serial numbers 24-3642, 24-4000 to 24-4782 inclusive, 24-4784 to 24-4803 inclusive, and PA-24-400 with serial numbers 26-2 and up.

C - Used on PA-24-260 with serial numbers 24-4413 to 24-4782 inclusive, 24-4784 to 24-4803 inclusive.

D - Used on PA-24-260 with serial numbers 24-3642, 24-4000 to 24-5018 inclusive and PA-24-400 with serial numbers 26-2 and up.

V - Used on PA-24-260 airplanes only.

Z - Used on PA-24-400 airplanes only.

When ordering, always specify Part Number, Description and Serial Number of Aircraft

Figure and Index Number	Part Number	Code	NOMENCLATURE	No. Req.	SERIAL NUMBERS AFFECTED
13C-47	22820-00	Z	BOX ASSEMBLY - Cabin heat, left	1	
	27193-00	V	BOX ASSEMBLY - Cabin heat, left	1	
	22343-00	A	BOX ASSEMBLY - Cabin heat, right	1	
	25452-00	V	BOX ASSEMBLY - Cabin heat, right	1	24-4247, 24-4300 to 24-4782, 24-4784 to 24-4803 inclusive
	27193-01	V	BOX ASSEMBLY - Cabin heat, right	1	24-4783, 24-4804 and up
-48	22889-00		TUBE ASSEMBLY - Heat box torque	1	
-49	22463-02	B	CONTROLS ASSEMBLY - Cabin air	1	
	26744-02	V	CONTROLS ASSEMBLY - Cabin air	1	24-4783, 24-4804 and up
-50	22287-00	B	KNOB ASSEMBLY - Control	4	
-51	22433-00		ARM ASSEMBLY - Control cable actuator	4	
-52	22459-00	B	PLATE - Control cover	1	
-53	22460-00		PLATE - Control guide	1	
-54	22470-04		WIRE - Control heat	1	
	22470-05		WIRE - Control defroster	1	
	22470-08		WIRE - Control cabin air, left	1	
	22470-09		WIRE - Control cabin air, right	1	
-55	22472-04		HOUSING - Control wire, cabin heat	1	
	22472-05		HOUSING - Control wire, defroster	1	
	22472-13		HOUSING - Control wire, cabin air, left	1	
	22472-10		HOUSING - Control wire, cabin air, right	1	
-56	61402-24		BUSHING - Control arm spacer	3	
-57	454 887		CLAMP - Control cable bushing	4	
-58	70371-02		FITTING - Swivel, defroster valve	1	
-59	70371-03		STUD - Swivel fitting	2	
-60	91193-00		FITTING - Swivel, cabin heat box	1	
-61	81342-19		WASHER - Swivel, fitting	2	
-62	22842-00		STRAP - Heat box torque tube attachment	2	
-63	60054-13		LINK - Heat box torque tube attachment	2	
-64	22478-00		BOX ASSEMBLY - Radio cooling	1	24-4783, 24-4804 to 24-5018 incl.
	22478-08		BOX ASSEMBLY - Radio cooling	1	24-5019 and up
-65	22482-00		SCOOP - Radio cooling	1	
-66	24657-00		TUBE ASSEMBLY - Radio cooling	1	24-4783, 24-4804 to 24-5018 incl.
-67	10525-61	C	HOSE - Muffler shroud air inlet, left	1	
-68	22502-49	C	HOSE - Defroster air inlet	1	
-69	10525-76	C	HOSE - Cabin heat inlet, left	1	
	10525-64	C	HOSE - Cabin heat inlet, right	1	
-70	408 803		WASHER - Spring (#3515-14-06)	1	

A - Used on PA-24-260 with serial numbers 24-3642, 24-4000 to 24-4246 inclusive, 24-4248 to 24-4299 inclusive, and PA-24-400 with serial numbers 26-2 and up.
B - Used on PA-24-260 with serial numbers 24-3642, 24-4000 to 24-4782 inclusive, 24-4784 to 24-4803 inclusive, and PA-24-400 with serial numbers 26-2 and up.
C - Used on PA-24-260 with serial numbers 24-3642, 24-4000 to 24-4782 inclusive, 24-4784 to 24-4803 inclusive.
V - Used on PA-24-260 airplanes only.
Z - Used on PA-24-400 airplanes only.

When ordering, always specify Part Number, Description and Serial Number of Aircraft

Figure and Index Number	Part Number	Code	NOMENCLATURE	No. Req.	SERIAL NUMBERS AFFECTED
13C-71	22502-20	V	HOSE - Cabin air exhaust	1	24-4247, 24-4300 and up
-72	22287-00	V	KNOB ASSEMBLY - Control	4	24-4783, 24-4804 to 24-5037 incl.
	66980-00	V	KNOB ASSEMBLY - Control	4	24-5038 and up
-73	26855-00	V	PLACARD - Heat and ventilation	1	24-4783, 24-4804 and up
-74	22502-24	V	HOSE - Cabin heat box, left	1	24-4783, 24-4804 and up
-75	22502-69	V	HOSE - Defroster air outlet	1	24-4783, 24-4804 and up
-76	29998-03	V	HOSE - Cabin heat box, right	1	24-4783, 24-4804 and up
-77	29998-02	V	HOSE - Muffler shroud air inlet	1	24-4783, 24-4804 and up
-78	26800-00	V	TEE ASSEMBLY - Cabin heat box, left	1	24-4783, 24-4804 and up
-79	26627-00	V	TEE ASSEMBLY - Defroster air outlet	1	24-4783, 24-4804 and up
-80	454 994	V	TEE - (#H2-1160)	1	24-4783, 24-4804 and up
-81	554 882	V	TEE - (#H2-9160)	2	24-4783, 24-4804 and up
-82	454 993	V	TEE - (#H3-1160)	4	24-4783, 24-4804 and up
-83	454 895	V	CLAMP - (#H2-1800)	4	24-4783, 24-4804 and up
-84	22497-10		COVER ASSEMBLY - Cabin air tube	1	24-4783, 24-4804 and up
-85	22497-09		COVER ASSEMBLY - Cabin air tube	1	24-4783, 24-4804 and up
-86	22497-08		COVER ASSEMBLY - Cabin air tube	1	24-4783, 24-4804 and up
-87	19871-00	A	GASKET - Air valve	2	

A - Used on PA-24-260 with serial numbers 24-3642, 24-4000 to 24-4246 inclusive, 24-4248 to 24-4299 inclusive, and PA-24-400 with serial numbers 26-2 and up.
V - Used on PA-24-260 airplanes only.

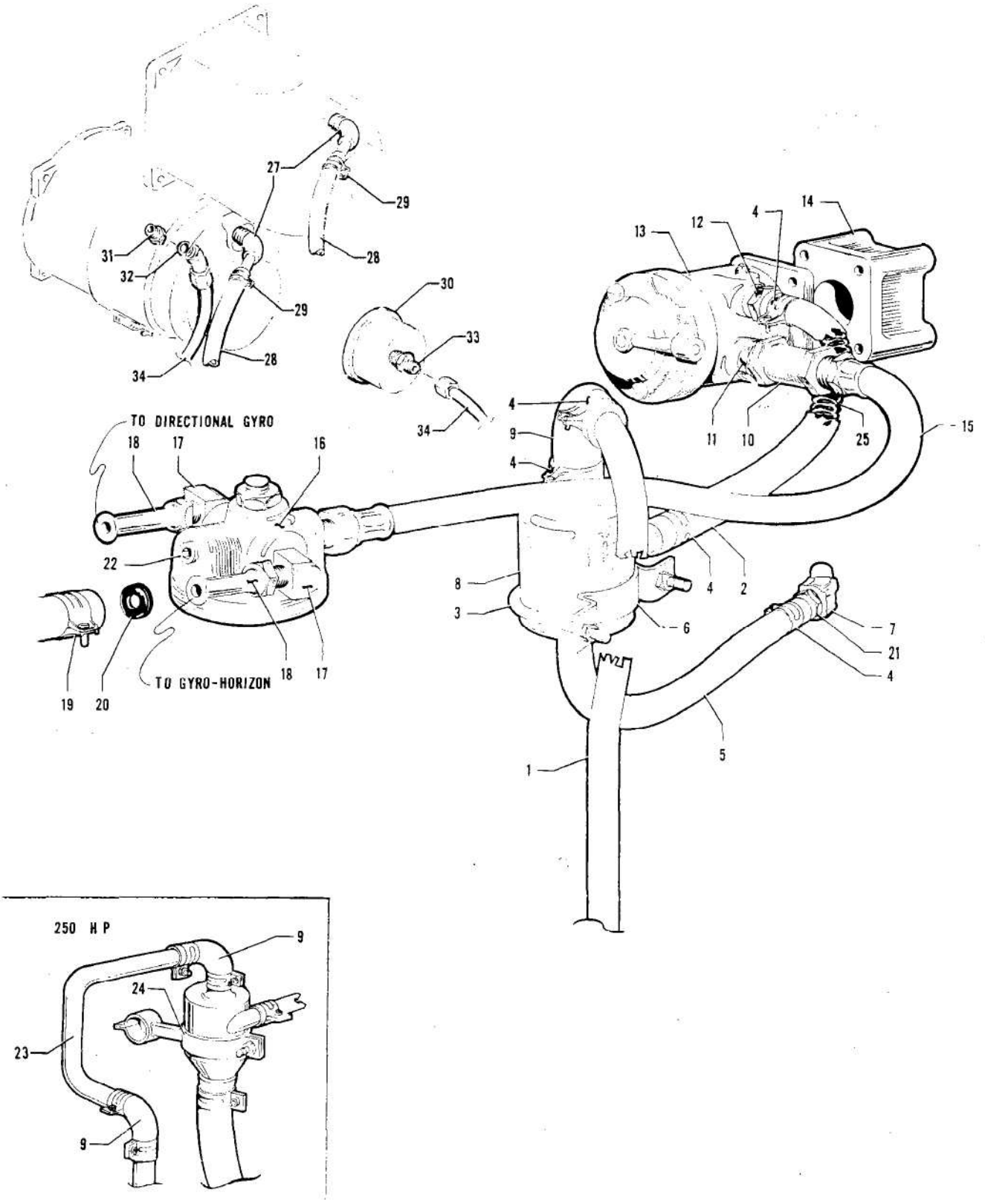

Figure 14. Vacuum Pump Installation and Instrument Lines - Serial Nos. 24-1 to 24-2175 inclusive, 24-2178, 24-2185, 24-2203, 24-2219 to 24-2221 inclusive, 24-2223 to 24-2298 inclusive.

Figure and Index Number	Part Number	Code	NOMENCLATURE	No. Req.	SERIAL NUMBERS AFFECTED
14-	21312		DRAWING - Vacuum System Installation "180"		
	21673		DRAWING - Vacuum System Installation "250"		
-1	21305-00		VENT LINE - Oil separator "180"	1	
	82352-47		VENT LINE - Oil separator "250"	1	
-2	82371-81		HOSE - Flexible "180"	1	
	82371-17		HOSE - Flexible "250"	1	
-3	18291-02		ROD - Oil separator attachment "180"	1	
-4	454 882		CLAMP - Hose (1" dia.)	6	
-5	82371-82		HOSE - Flexible	1	
-6	21298-00		BRACKET - Oil separator attachment "180"	1	
-7	458 883		ELBOW - (AN915-3D)	2	
-8	486 380		SEPARATOR ASSEMBLY - Oil	1	
-9	455 149		HOSE - Connection (2 used on "250")	1	
-10	492 029		VALVE - Check (2-2844-75)	1	
-11	476 645		UNION - (AN911-3D)	1	
-12	451 861		ADAPTER - (AN840-9D)	1	
-13	481 667		PUMP - Vacuum	1	
-14	450 380	X	KIT - Vacuum pump drive	1	
-15	21343-00		HOSE ASSEMBLY - Flexible "180"	1	
	21343-02		HOSE ASSEMBLY - Flexible "250"	1	
-16	492 059	B	VALVE - Suction regulator	1	
-17	460 661		ELBOW - (W/H 3400 x 4)	2	
-18	451 458		ADAPTER - (AN840-6D)	2	
-19	454 904		CLAMP - Hose (3/4" dia.)	2	
-20	434 134		GROMMET - (AN931-6-10)	2	
-21	18936-00		ADAPTER - Hose (special)	1	
-22	580 887		PLUG - (AN932-2)	1	
-23	21677-00		TUBE - Oil separator discharge "250"	1	
-24	21516-00		CLAMP ASSEMBLY - Oil separator support "250"	1	
-25	83302-44		SPRING - "180"	1	24-1477 and up
-26	21296-00		BRACKET - Suction regulating valve mounting	1	24-1 to 24-2201 inclusive
-27	458 941	D	ELBOW - Gyro to regulating valve (AN844-6D)	2	
-28	82371-77	D	HOSE - Gyro to regulating valve	2	
-29	454 904	D	CLAMP - Hose (3/4 D)	2	
-30	450 787	C	INSTRUMENT - Suction gauge	1	24-1 to 24-2298 inclusive
-31	453 653	C	BUSHING - (3224-2)	1	24-1 to 24-2638 inclusive
-32	458 893	C	ELBOW - (AN822-3D)	1	24-1 to 24-2638 inclusive
-33	476 647	C	NIPPLE - (AN816-3D)	1	24-1 to 24-2638 inclusive
-34	21779-00	CD	LINE ASSEMBLY - Suction gauge	1	

A - Serial numbers 24-1 to 24-2175 inclusive, 24-2178, 24-2185, 24-2203, 24-2219 to 24-2221 inclusive, 24-2223 to 24-2298 inclusive.
B - Not available. Suction Regulating Valve Replacement Kit 756 764 will be supplied as a replacement. If Kit 756 764 has previously been installed, order Valve Assembly 492 065.
C - Used when AutoControl I is installed.
D - Used on airplanes with serial numbers 24-1 to 24-2174, 24-2176 to 24-2298 inclusive.
X - Used on PA-24-180 airplanes only.

When ordering, always specify Part Number, Description and Serial Number of Aircraft

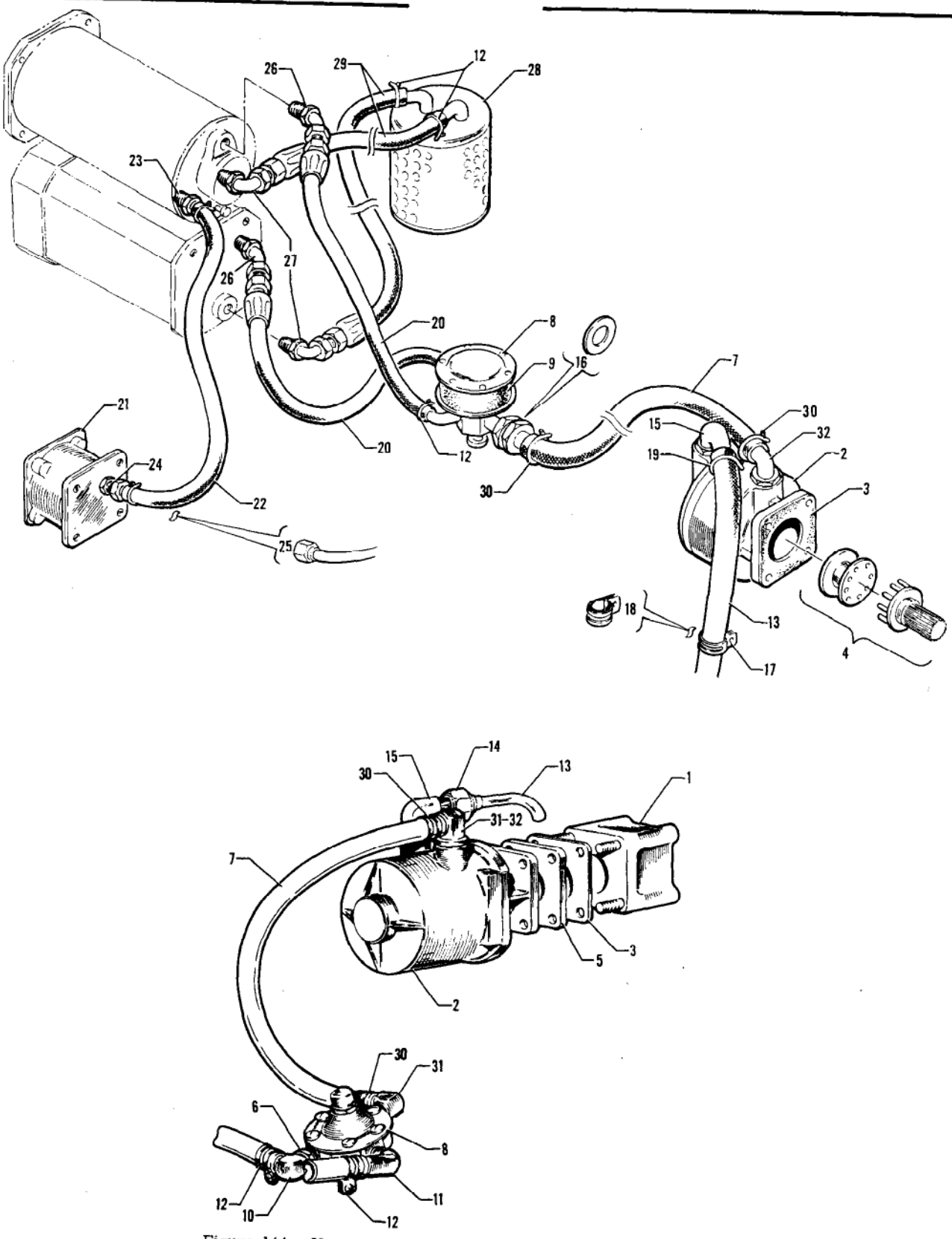

Figure 14A. Vacuum System Installation (Dry Vacuum Pump) - Serial Nos. 24-2176, 24-2177, 24-2179 to 24-2184 inclusive, 24-2186 to 24-2202 inclusive, 24-2204 to 24-2218 inclusive, 24-2222, 24-2299 and up, and 26-2 and up.

Figure and Index Number	Part Number	Code	NOMENCLATURE	No. Req.	SERIAL NUMBERS AFFECTED
14A-	22605	B	DRAWING - Vacuum System Installation		
	24642	X	DRAWING - Vacuum System Installation		24-3662 and up
	24643	VY	DRAWING - Vacuum System Installation		24-3664 to 24-4719 inclusive
	24643	Z	DRAWING - Vacuum System Installation		
	26283	V	DRAWING - Vacuum System Installation		24-4720 to 24-4782 inclusive, 24-4784 to 24-4803 inclusive
	26712	V	DRAWING - Vacuum System Installation		24-4783, 24-4804 and up
-1	450 380	X	KIT - Vacuum pump drive	1	
-2	481 681	BD	PUMP - Vacuum (#113A5)	1	
	481 692		PUMP - Vacuum (#200 CC)	1	24-3662 and up, 26-2 and up
-3	751 859		GASKET - Vacuum pump mounting (B3-1-2)	1	
-4	753 910		COUPLING ASSEMBLY - Pump drive (B1-9-1)	1	24-3662 and up, 26-2 and up
-5	487 370	BY	SPACER - Vacuum mounting (B2002A1)	1	
-6	453 617	A	REDUCER - (AN912-2D)	1	
-7	82371-91	A	HOSE - Flexible, I. D. 1/2" L. 15"	1	
	16633-14	A	HOSE - Flexible, I. D. 1/2" L. 11"	1	
	16633-29	X	HOSE - Flexible, I. D. 5/8" L. 20"	1	24-2563, 24-2588 to 24-3661
	16633-30	VY	HOSE - Flexible, I. D. 5/8" L. 13"	1	24-2563, 24-2588 and up
	16633-30	X	HOSE - Flexible, I. D. 5/8" L. 13"	1	24-3662 and up
	61541-24	Z	HOSE - Flexible, I. D. 5/8" L. 11"	1	
-8	492 059	AC	VALVE - Suction regulator (643646)	1	
	492 065		VALVE - Suction regulator (#133A4)	1	24-2563, 24-2588 and up, 26-2 and up
-9	751 815	E	FILTER - Regulating valve (B3-5-1)	1	
-10	458 941	A	ELBOW - (AN844-6D)	1	
-11	458 928	A	ELBOW - (AN842-6D)	1	

A - Used on PA-24-180 and PA-24-250 with serial numbers 24-2176, 24-2177, 24-2179 to 24-2184 inclusive, 24-2186 to 24-2202 inclusive, 24-2204 to 24-2213 inclusive, 24-2222, 24-2299 to 24-2562 inclusive, 24-2564 to 24-2587 inclusive.

B - Used on PA-24-180 and PA-24-250 with serial numbers 24-2176, 24-2177, 24-2179 to 24-2184 inclusive, 24-2186 to 24-2202 inclusive, 24-2204 to 24-2218 inclusive, 24-2222, 24-2299 to 24-3661 inclusive, and 24-3663.

C - Not available. Suction Regulating Valve Replacement Kit 756 764 will be supplied as a replacement. If Kit 756 764 has previously been installed, order Valve Assembly 492 065.

D - Vacuum pump 481 681 (#113A5) not available. Pump 481 692 (#200 CC) will be supplied as a replacement. When preceding replacement is made, it will be necessary to order items 13, 15 and 19 and items 17 or 18 used on serial numbers 24-3662 and up.

E - Used with 492 065 regulating valve.

V - Used on PA-24-260 airplanes only.

X - Used on PA-24-180 airplanes only.

Y - Used on PA-24-250 airplanes only.

Z - Used on PA-24-400 airplanes only.

Figure and Index Number	Part Number	Code	NOMENCLATURE	No. Req.	SERIAL NUMBERS AFFECTED
14A-12	454 903	B	CLAMP - Hose (5/8" dia.)	2	
	454 832		CLAMP - Hose (SAE #10)	2	24-3662 and up, 26-2 and up
-13	22514-00	AB	TUBE ASSEMBLY - Exhaust	1	
	82371-54		HOSE - Exhaust	1	24-3662 and up, 26-2 and up
-14	477 624	B	NUT - (AN818-8D) Exhaust outlet	1	
-15	458 898	AB	ELBOW - (AN822-8D) Exhaust outlet	1	
	558 901		ELBOW - (#1K1-6-8) Exhaust outlet	1	24-3662 and up, 26-2 and up
-16	407 595		WASHER - (AN960-1416L)	1	24-2563, 24-2558 and up, 26-2 and up
-17	24644-02	VYZ	CLAMP - Cushioned	1	24-3664 and up, 26-2 and up
-18	454 868	X	CLAMP - Hose (#A3046S-12-91)	2	24-3662 and up
-19	454 987		CLAMP - Hose (SAE #12)	1	24-3622 and up, 26-2 and up
-20	16633-25	H	HOSE - Gyros to regulating valve	2	
	39998-03	V	HOSE ASSEMBLY - Gyros to regulating valve	2	24-4783, 24-4804 and up
-21	450 787	G	INSTRUMENT - Suction gauge (F-3)	1	
	550 664	V	INSTRUMENT - Suction gauge (1G3-4)	1	24-4380 and up
-22	22229-00	J	LINE ASSEMBLY - Gyro horizon to suction gauge	1	24-2299 to 24-2638 inclusive
	83161-20	CEG	HOSE - Gyro horizon to suction gauge	1	
	61541-25	CF	HOSE - Gyro horizon to suction gauge	1	24-4380 to 24-4782 inclusive, 24-4784 to 24-4803 inclusive
	61541-25	DH	HOSE - Directional gyro to suction gauge	1	
	16633-94	DV	HOSE - Gyro horizon to suction gauge	1	24-4783, 24-4804 and up
-23	19897-00	CEG	CONNECTOR ASSEMBLY - Gyro horizon	1	
	558 904	CF	ELBOW - Gyro horizon	1	24-4380 to 24-4719 inclusive, 26-2 and up
	458 948	DH	ELBOW - Directional gyro (1K1-2-4)	1	
	451 881	DH	ELBOW - Gyro horizon (1K10-2-4)	1	
	451 939	DV	ELBOW - Gyro horizon (1K10-4-6)	1	24-4783, 24-4804 and up

A - If vacuum pump 481 692 (#200 CC) has been installed, order part for serial numbers 24-3662 and up.
B - Used on PA-24-180 and PA-24-250 with serial numbers 24-2176, 24-2177, 24-2179 to 24-2184 inclusive, 24-2186 to 24-2202 inclusive, 24-2204 to 24-2218 inclusive, 24-2222, 24-2299 to 24-3661 inclusive, and 24-3663.
C - Used when 3 inch gyros are not installed.
D - Used when 3 inch gyros are installed.
E - Used when suction gauge 450 787 is installed.
F - Used when suction gauge 550 664 is installed.
G - Used on PA-24-180 and PA-24-250 with serial numbers 24-2299 and up, PA-24-260 with serial numbers 24-3642, 24-4000 to 24-4379 inclusive, and PA-24-400 with serial numbers 26-2 and up.
H - Used on PA-24-180 and PA-24-250 with serial numbers 24-2175, 24-2299 and up, PA-24-260 with serial numbers 24-3642, 24-4000 to 24-4782 inclusive, 24-4784 to 24-4803 inclusive, and PA-24-400 with serial numbers 26-2 and up.
J - Used when AutoControl I is installed.
V - Used on PA-24-260 airplanes only.
X - Used on PA-24-180 airplanes only.
Y - Used on PA-24-250 airplanes only.
Z - Used on PA-24-400 airplanes only.

Figure and Index Number	Part Number	Code	NOMENCLATURE	No. Req.	SERIAL NUMBERS AFFECTED
14A-24	476 647	EFG	NIPPLE - Suction gauge (AN816-3D)	1	
-25	17881-03	EFG	LINE ASSEMBLY - Suction gauge	1	
-26	22756-00	B	ELBOW - Gyros to regulating valve (AN842-6D)	2	24-2299 to 24-2638 inclusive
	458 945	F	ELBOW - Gyros to regulating valve (1K1-4-6)	2	24-2299 to 24-4719 inclusive, 26-2 and up
	451 939	CD	ADAPTER - Gyro horizon to regulating valve (1K10-4-6)	1	
	558 913	CD	ELBOW - Directional gyro to regulating valve (1K9-4-6)	1	
	558 937	DV	ELBOW - Gyros to regulating valve (1K46-1)	2	24-4783, 24-4804 and up
-27	458 945	C	ELBOW - Gyros to filter (1K1-4-6)	2	
	558 936	V	ELBOW - Gyros to filter (1K45-1)	2	24-4783, 24-4804 and up
-28	460 798		FILTER - Air (25230-00)	1	
-29	16633-04	C	HOSE - Directional gyro to filter assembly	1	
	16633-26	C	HOSE - Gyro horizon to filter assembly	1	
	39998-03	V	HOSE ASSEMBLY - Gyros to filter assembly	2	24-4783, 24-4804 and up
-30	454 904	A	CLAMP - Hose (3/4" dia.)	2	
	454 881	XY	CLAMP - Hose (7/8" dia.)	2	24-2563, 24-2588 to 24-3661
	554 802		CLAMP - Hose (SAE #14)	2	24-3662 and up, 26-2 and up
-31	458 925	A	ELBOW - (AN842-8D)	2	
-32	458 958		ELBOW - (#1K1-6-10)	1	24-2563, 24-2588 and up, 26-2 and up

A - Used on PA-24-180 and PA-24-250 with serial numbers 24-2176, 24-2177, 24-2179 to 24-2184 inclusive, 24-2186 to 24-2202 inclusive, 24-2204 to 24-2213 inclusive, 24-2222, 24-2299 to 24-2562 inclusive, 24-2564 to 24-2587 inclusive.
B - Used when AutoControl I is installed.
C - Used on PA-24-180 and PA-24-250 with serial numbers 24-2175, 24-2299 and up, PA-24-260 with serial numbers 24-3642, 24-4000 to 24-4782 inclusive, 24-4784 to 24-4803 inclusive, and PA-24-400 with serial numbers 26-2 and up.
D - Used when 3 inch gyros are installed.
E - Used when suction gauge 450 787 is installed.
F - Used when 3 inch gyros are not installed.
G - Used on PA-24-180 and PA-24-250 with serial numbers 24-2299 and up, PA-24-260 with serial numbers 24-3642, 24-4000 to 24-4379 inclusive, and PA-24-400 with serial numbers 26-2 and up.
V - Used on PA-24-260 airplanes only.
X - Used on PA-24-180 airplanes only.
Y - Used on PA-24-250 airplanes only.

PILOTEN-SERVICE
Straubing LBA II-A-170
Telefon (09429) 716

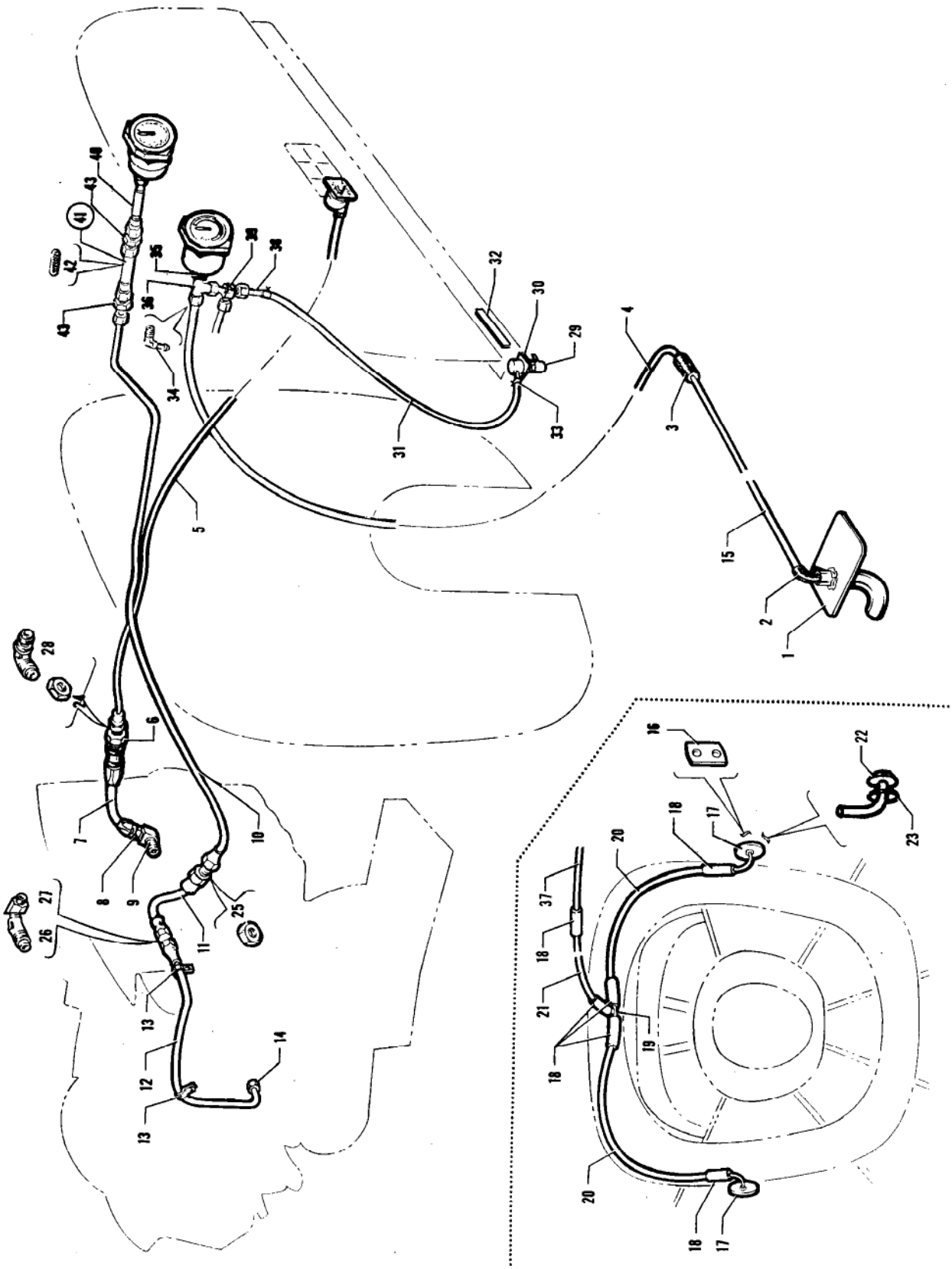

Figure 15. Airspeed, Static, Oil Pressure and Manifold Pressure Lines

Figure and Index Number	Part Number	Code	NOMENCLATURE	No. Req.	SERIAL NUMBERS AFFECTED
15-	20373	XY	DRAWING - Wing Wires and Airspeed Tubes Installation		24-1 to 24-2298 inclusive
	22464	XY	DRAWING - Wing Wires and Airspeed Tubes Installation		24-2299 and up
	22770	Z	DRAWING - Wing Wires and Airspeed Tubes Installation		
	24790	V	DRAWING - Wing Wires and Airspeed Tubes Installation		
	21288	X	DRAWING - Miscellaneous Air and Fluid Lines Installation		24-1 to 24-2298 inclusive
	22375	X	DRAWING - Miscellaneous Air and Fluid Lines Installation		24-2175, 24-2299 and up
	21683	Y	DRAWING - Miscellaneous Air and Fluid Lines Installation		24-105 to 24-2298 inclusive
	22376	VY	DRAWING - Miscellaneous Air and Fluid Lines Installation		24-2299 and up
	24547	Z	DRAWING - Miscellaneous Air and Fluid Lines Installation		
	20885	D	DRAWING - Static Vent Tubes Installation		
	25495	V	DRAWING - Static Vent Tubes Installation		24-4247, 24-4300 and up
-1	20264-00		TUBE ASSEMBLY - Airspeed, left	1	
-2	83161-03		HOSE - Airspeed, flexible, left	1	
-3	83161-07	A	HOSE - Airspeed line	1	
	83161-03	C	HOSE - Airspeed line	1	
-4	20648-00		LINE ASSEMBLY - Airspeed (58" L - without fitting)	1	
	20648-03		LINE ASSEMBLY - Airspeed (46" L - without fitting)	1	
	25711-00		LINE ASSEMBLY - Airspeed (46" L - with end fitting)	1	
-5	21284-00	X	LINE ASSEMBLY - Oil pressure	1	24-1 to 24-2201 inclusive
	21284-04	Y	LINE ASSEMBLY - Oil pressure	1	24-1 to 24-2201 inclusive
	21284-05	XY	LINE ASSEMBLY - Oil pressure (21")	1	24-2202 to 24-2298 inclusive
	21284-07	C	LINE ASSEMBLY - Oil pressure (17 1/2")	1	
-6	491 049	A	UNION - (AN815-3D)	1	24-1 to 24-2201 inclusive
	458 909	B	ELBOW - (AN837-3D)	1	
-7	17766-07	XY	HOSE ASSEMBLY - Flexible (7 1/2")	1	24-1 to 24-2201 inclusive
	17766-21	X	HOSE ASSEMBLY - Flexible (22 1/8")	1	24-2202 to 24-2298 inclusive
	17766-41	VY	HOSE ASSEMBLY - Flexible (18 3/4")	1	24-2299 to 24-4782 inclusive, 24-4784 to 24-4803 inclusive
	17766-38	Y	HOSE ASSEMBLY - Flexible (17 1/2")	1	24-2202 to 24-2298 inclusive
	17766-46	X	HOSE ASSEMBLY - Flexible (25 1/4")	1	24-2299 and up
	17766-38	Z	HOSE ASSEMBLY - Flexible (17 1/2")	1	26-2 and up
	17766-21	V	HOSE ASSEMBLY - Flexible (22 1/8")	1	24-4783, 24-4804 and up
-8	476 647	A	UNION - (AN816-3D)	1	
	453 616	Z	BUSHING - (AN912-1D)	1	

A - Used on PA-24-180 and PA-24-250 airplanes with serial numbers 24-1 to 24-2174 inclusive, 24-2176 to 24-2298 inclusive.
B - Used on PA-24-180 and PA-24-250 airplanes with serial numbers 24-2202 and up, PA-24-400 airplanes and PA-24-260 airplanes.
C - Used on PA-24-180 and PA-24-250 airplanes with serial numbers 24-2175, 24-2299 and up, PA-24-400 and PA-24-260 airplanes.
D - Used on PA-24-180, PA-24-250 and PA-24-260 with serial numbers 24-1 to 24-4246 inclusive, 24-4248 to 24-4299 inclusive, PA-24-400 with serial numbers 26-2 and up.
V - Used on PA-24-260 airplanes only.
X - Used on PA-24-180 airplanes only.
Y - Used on PA-24-250 airplanes only.
Z - Used on PA-24-400 airplanes only.

PILOTEN-SERVICE
Straubing LBA II-A-170
Telefon (09429) 716

Figure and Index Number	Part Number	Code	NOMENCLATURE	No. Req.	SERIAL NUMBERS AFFECTED
15-9	19053-00	D	ELBOW - Restricted	1	
	17803-00	E	ELBOW - Restricted	1	
-10	82332-34	XY	LINE ASSEMBLY - Manifold pressure (41")	1	24-1 to 24-2201 inclusive
	22109-00	XY	LINE ASSEMBLY - Manifold pressure (19") rear	1	24-2202 to 24-2298 inclusive
	22109-04	X	LINE ASSEMBLY - Manifold pressure (22 1/2") front	1	24-2202 to 24-2298 inclusive
	22109-03	Y	LINE ASSEMBLY - Manifold pressure (16") front	1	24-2202 to 24-2298 inclusive
	22109-07	F	LINE ASSEMBLY - Manifold pressure (15 3/4")	1	
	27138-00	V	LINE ASSEMBLY - Manifold pressure (10 11/16")	1	24-4935 and up
-11	13425-00	D	HOSE ASSEMBLY - Flexible	1	
	17766-39	X	HOSE ASSEMBLY - Flexible	1	24-2175, 24-2299 and up
	17766-42	VY	HOSE ASSEMBLY - Flexible	1	24-2299 and up
	17766-81	Z	HOSE ASSEMBLY - Flexible	1	
-12	82332-26	X	LINE ASSEMBLY - Manifold pressure	1	24-1 to 24-889 inclusive
	82332-36	B	LINE ASSEMBLY - Manifold pressure	1	
	22362-00	VXY	LINE ASSEMBLY - Manifold pressure	1	24-2175, 24-2299 to 24-4934
	22362-06	V	LINE ASSEMBLY - Manifold pressure	1	24-4935 and up
-13	80032-53	X	CLAMP - Manifold line	2	24-1 to 24-889 inclusive
	80032-55	B	CLAMP - Manifold line	2	
	80032-53	VXY	CLAMP - Manifold line	2	24-2175, 24-2299 and up
-14	460 685	VXY	ADAPTER - (W/H 200 x 4)	1	
-15	61323-07		HOSE - Airspeed	1	
-16	21457-00	XY	PAD - Static air inlet	2	24-1 to 24-3340 inclusive
-17	20886-00	XY	PLATE ASSEMBLY - Static air inlet	2	24-1 to 24-3340 inclusive
-18	83161-03		TUBE - Plastic	6	
-19	14493-00		TUBE ASSEMBLY - Static vent tee	1	
-20	13586-35		TUBE - Plastic	2	
-21	20649-00	C	LINE ASSEMBLY - Static air	1	
	61323-13	V	LINE ASSEMBLY - Static air	1	24-4247, 24-4300 and up
-22	23558-00		FITTING - Static line vent	2	24-3341 and up, 26-2 and up
-23	484 744		RING - Retaining (#5115-18) (static line vent)	2	24-3341 and up, 26-2 and up
-24	477 617	A	NUT - (AN924-3D)	1	
-25	477 618	A	NUT - (AN924-4D)	1	

A - Used on PA-24-180 and PA-24-250 with serial numbers 24-2202 and up, and PA-24-400.
B - Used on PA-24-180 and PA-24-250 with serial numbers 24-890 to 24-2174, 24-2176 to 24-2298 inclusive.
C - Used on PA-24-180, PA-24-250 and PA-24-260 with serial numbers 24-1 to 24-4246 inclusive, 24-4248 to 24-4299 inclusive, and PA-24-400 with serial numbers 26-2 and up.
D - Used on PA-24-180 and PA-24-250 with serial numbers 24-1 to 24-2174, 24-2176 to 24-2298 inclusive.
E - Used on PA-24-180 and PA-24-250 with serial numbers 24-2175, 24-2299 and up, PA-24-400 and PA-24-260.
F - Used on PA-24-180 and PA-24-250 with serial numbers 24-2175, 24-2299 and up, PA-24-260 with serial numbers 24-3642, 24-4000 to 24-4934 inclusive, and PA-24-400.
V - Used on PA-24-260 airplanes only.
X - Used on PA-24-180 airplanes only.
Y - Used on PA-24-250 airplanes only.
Z - Used on PA-24-400 airplanes only.

Figure and Index Number	Part Number	Code	NOMENCLATURE	No. Req.	SERIAL NUMBERS AFFECTED
15-26	491 050	B	UNION - (AN815-4D)	1	
	458 891	Z	ELBOW - (AN823-4D)	1	
-27	460 663	Z	ELBOW - (W/H 3350 x 2)	1	
	458 880	V	ELBOW - (AN821-4D)	1	24-4783, 24-4804 and up
-28	458 910	VXY	ELBOW - (AN837-4D)	1	24-2202 and up
	24539-00	Z	ELBOW - (45°)	1	
-29	492 100	VZ	VALVE - Alternate static air (#CCA-7450)	1	
-30	25290-00	A	BRACKET ASSEMBLY - Air valve mounting	1	
	26896-00	V	BRACKET ASSEMBLY - Air valve mounting	1	24-4783, 24-4804 and up
-31	83161-38		HOSE - Alternate static air	1	
-32	25220-00	A	PLACARD - Alternate static source control	1	
	26900-00	V	PLACARD - Alternate static source control	1	24-4783, 24-4804 and up
-33	454 833	VZ	CLAMP - (#6) Alternate static air	2	
-34	458 929	VZ	ELBOW - (AN842-4D) Alternate static air	1	24-3642, 24-4000 to 24-4566, 26-2 and up
-35	476 643	VZ	NIPPLE - (AN911-1D) Alternate static air	1	24-3642, 24-4000 to 24-4566, 26-2 and up
-36	488 474	VZ	TEE - (AN917-1D) Alternate static air	1	24-3642, 24-4000 to 24-4566, 26-2 and up
	488 310	V	TEE - (AN826-3D) Alternate static air	1	24-4567 and up
-37	20649-05	V	LINE ASSEMBLY - Static air	1	24-4247, 24-4300 and up
-38	25705-00	V	TUBE ASSEMBLY - Alternate static hose	1	24-4567 and up
-39	488 310		TEE - (AN826-3D)	1	24-3642, 24-4000 to 24-4566, 26-2 and up
	488 525		TEE - Swivel (#3-SW-12)	1	24-4567 and up
-40	27023-00	V	LINE ASSEMBLY - Manifold pressure gauge	1	24-4935 and up
-41	43404-00	V	FILTER ASSEMBLY - Manifold pressure gauge	1	24-4935 and up
-42	754 817	V	FILTER	1	24-4935 and up
-43	43775-00	V	REDUCER	2	24-4935 and up

A - Used on PA-24-260 with serial numbers 24-3642, 24-4000 to 24-4782 inclusive, 24-4784 to 24-4803 inclusive, and PA-24-400.
B - Used on PA-24-180 and PA-24-250 with serial numbers 24-2202 and up, and PA-24-260 with serial numbers 24-3642, 24-4000 to 24-4782 inclusive, 24-4784 to 24-4803 inclusive.
V - Used on PA-24-260 airplanes only.
X - Used on PA-24-180 airplanes only.
Y - Used on PA-24-250 airplanes only.
Z - Used on PA-24-400 airplanes only.

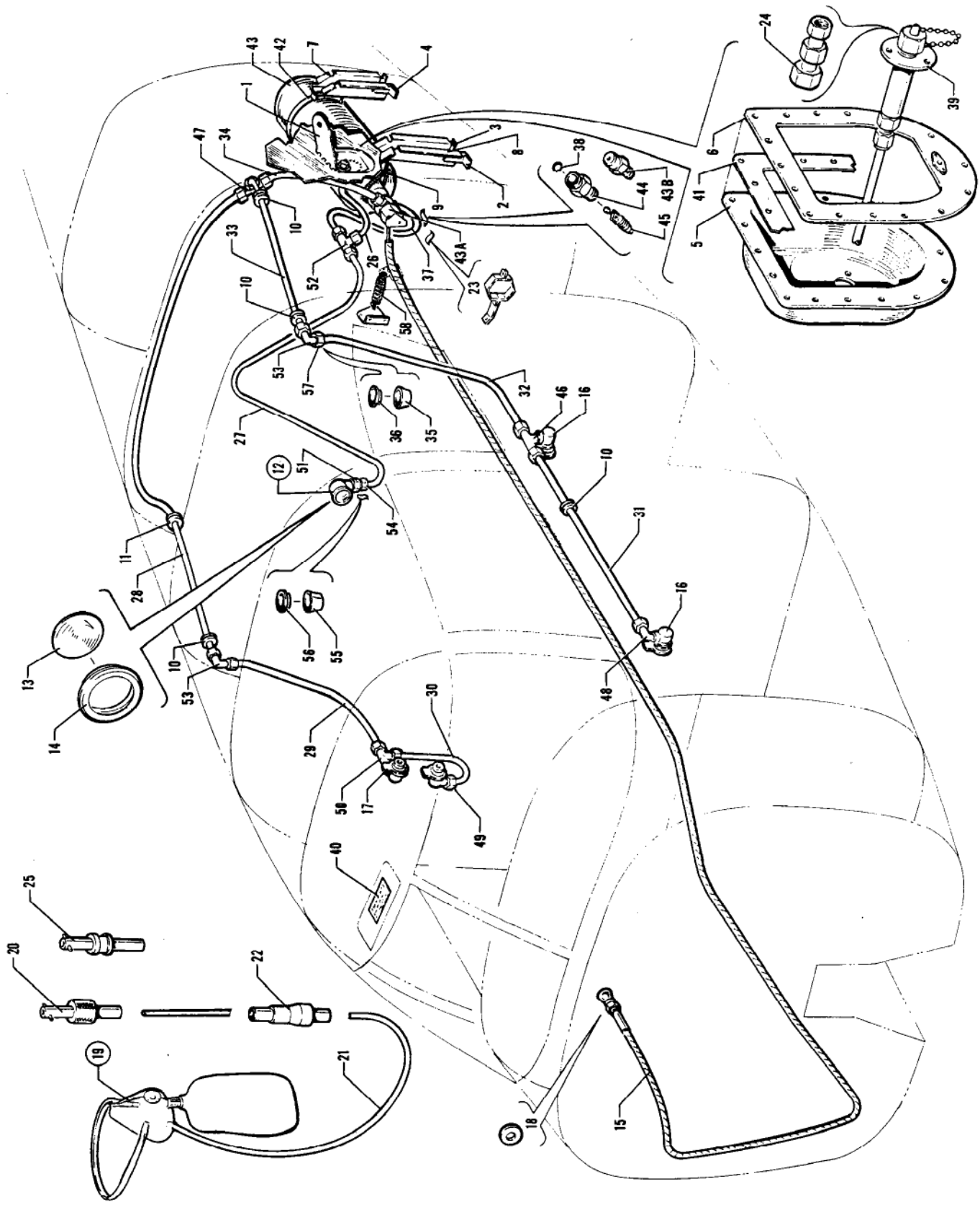

Figure 15A. Oxygen System Installation

Figure and Index Number	Part Number	Code	NOMENCLATURE	No. Req.	SERIAL NUMBERS AFFECTED
15A-	25342		DRAWING - Oxygen System Installation		
-1	19802-05		PLATE ASSEMBLY - Access	1	
-2	25392-02		CLIP - Mounting channel attachment	1	
-3	25392-03		CLIP - Mounting channel attachment	1	
-4	25392-04		CLIP - Mounting channel attachment	1	
-5	25393-00		PLATE - Recharge valve mounting	1	
-6	25394-00		PLATE ASSEMBLY - Valve mounting	1	
-7	25395-00		CHANNEL ASSEMBLY - Cylinder mounting, rear	1	
-8	25396-00		CHANNEL ASSEMBLY - Cylinder mounting, front	1	
-9	25397-00		CABLE ASSEMBLY - Cylinder restraining	1	
-10	434 138		GROMMET - (AN931-10-14)	4	
-11	434 132		GROMMET - (AN931-11-16)	1	
-12	751 887		GAGE ASSEMBLY - Oxygen	1	
-13	752 355		LENS - Gage assembly	1	
-14	753 433		BEZEL - Gage assembly	1	
-15	753 938		CABLE ASSEMBLY - Push pull control	1	
-16	752 581		OUTLET ASSEMBLY - Oxygen	4	
-17	757 213		PLATE - Outlet assembly, instruction	4	
-18	754 547		DECAL - Control cable	1	
-19	474 055		MASK ASSEMBLY - Oxygen, nasal type, 2.0 LPM (crew)	AR	
	474 056		MASK ASSEMBLY - Oxygen, semi-disposable, 2.0 LPM (crew)	AR	
	474 058		MASK ASSEMBLY - Oxygen, semi-disposable, 1.5 LPM (passenger)	AR	
	753 743		MASK ASSEMBLY - Oxygen, oronasal with microphone, 2.0 LPM (pilot)	1	
-20	753 695		MASK - Oxygen, semi-disposable	1	
-21	753 074		TUBING - Plastic, oxygen mask (5' length)	1	
	756 319		TUBING - Rubber, oxygen mask (4 1/2' length)	1	
-22	752 122		FLOW INDICATOR ASSEMBLY	1	
-23	753 974		COUPLING - Oxygen plug-in, 2.0 LPM	AR	
	753 975		COUPLING - Oxygen plug-in, 1.5 LPM	AR	
-24	757 810		COUPLING - Oxygen filler	1	
-25	753 941		COUPLING - Oxygen plug-in, therapeutic	AR	
-26	31978-11		LINE - Oxygen, high pressure	1	
-27	31978-12		LINE - Oxygen, high pressure	1	
-28	31978-13		LINE - Oxygen, low pressure	1	
-29	31978-14		LINE - Oxygen, low pressure	1	
-30	31978-15		LINE - Oxygen, low pressure	1	
-31	31978-16		LINE - Oxygen, low pressure	1	
-32	31978-17		LINE - Oxygen, low pressure	1	
-33	31978-18		LINE - Oxygen, low pressure	1	
-34	31978-19		LINE - Oxygen, low pressure	1	
-35	756 252		SCREW - Oxygen gauge bracket	1	
-36	753 214		WASHER - Oxygen gauge bracket	1	
-37	756 300		TUBE ASSEMBLY - High pressure	1	
-38	755 946		"O" RING - Tube assembly	1	
-39	756 504		VALVE ASSEMBLY - Recharge	1	
		A	A - Used on PA-24-260 with serial numbers 24-3642, 24-4000 to 24-4246, 24-4248 to 24-4299 inclusive, PA-24-400 with serial numbers 26-2 and up.		

When ordering, always specify Part Number, Description and Serial Number of Aircraft

Figure and Index Number	Part Number	Code	NOMENCLATURE	No. Req.	SERIAL NUMBERS AFFECTED
15A-40	753 942		CHART - Instrument and duration	1	
-41	25603-00		PLATE - Reinforcement	1	
-42	753 435		BRACKET ASSEMBLY - Cylinder mounting	2	
-43	753 943		CYLINDER AND REGULATOR ASSEMBLY	1	
-43a	756 038		REGULATOR ASSEMBLY - Oxygen	1	
-43b	756 507		RELIEF VALVE - Regulator assembly	1	
-44	756 505		VALVE ASSEMBLY - Charging	1	
-45	753 947		CORE - Valve assembly	1	
-46	756 301	B	TEE - Low pressure	1	
-47	756 302	B	TEE - Low pressure	1	
-48	754 761	B	ELBOW	1	
-49	753 944	B	CONNECTOR	1	
-50	756 303	B	TEE	1	
-51	753 945	B	CONNECTOR	2	
-52	756 304	B	TEE - High pressure	1	
-53	754 762	B	ELBOW	2	
-54	752 504		NUT - Flareless fitting (1/8")	AR	
-55	751 811		FERRULE - Flareless fitting, front (1/8")	AR	
-56	751 812		FERRULE - Flareless fitting, back (1/8")	AR	
-57	752 505		NUT - Flareless fitting (1/4")	AR	
-58	83302-24		SPRING - Control cable	1	

A - Used on PA-24-260 with serial numbers 24-3642, 24-4000 to 24-4246, 24-4248 to 24-4299 inclusive, and PA-24-400 with serial numbers 26-2 and up.
B - Nuts and ferrules supplied with fitting.

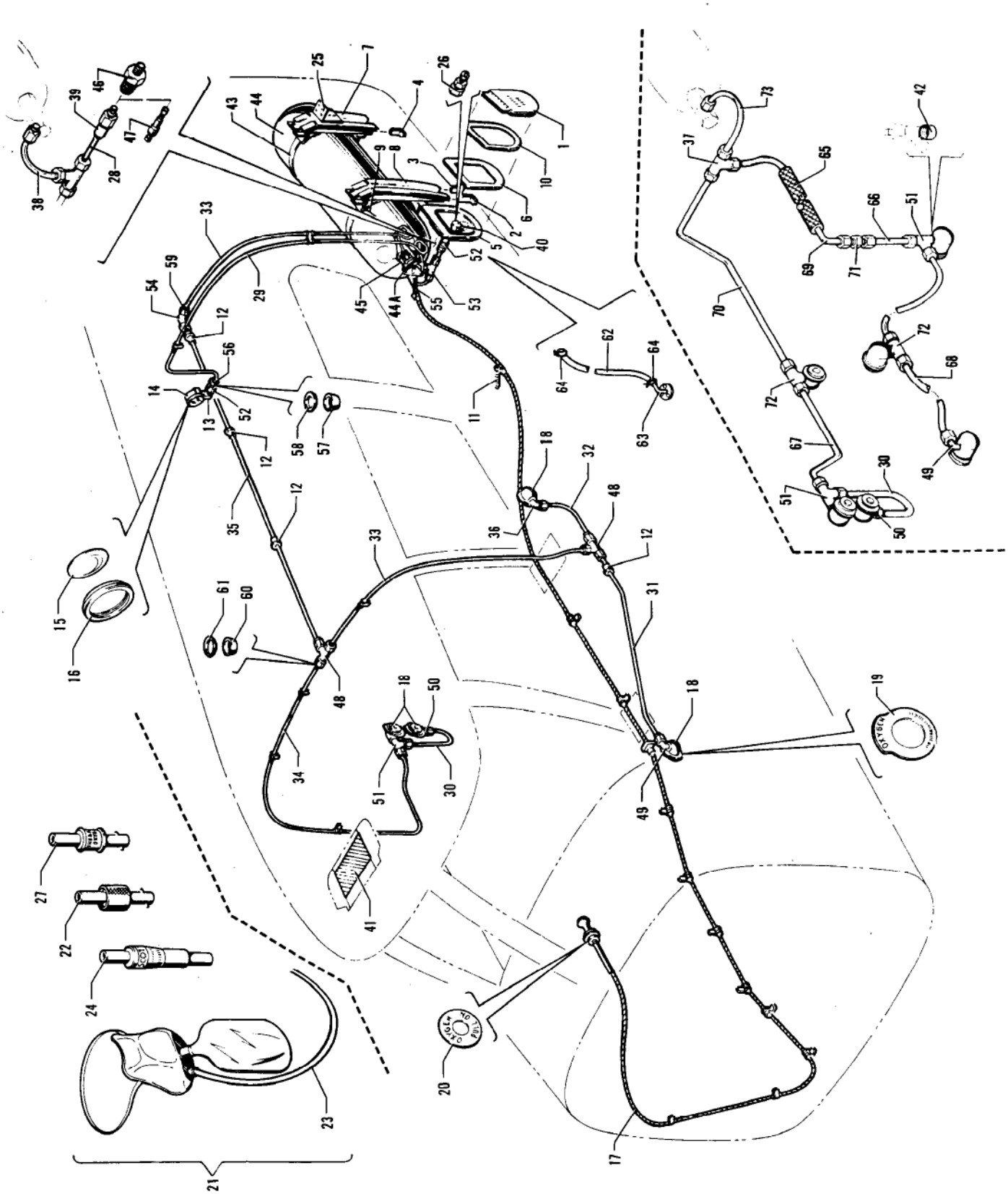

Figure 15B. Oxygen System Installation
(Serial Nos. 24-4247, 24-4300 to 24-4782, 24-4784 to 24-4803 inclusive)

Figure and Index Number	Part Number	Code	NOMENCLATURE	No. Req.	SERIAL NUMBERS AFFECTED
15B-31	25568-02	C	LINE - Oxygen, low pressure	1	
-32	25568-03	C	LINE - Oxygen, low pressure	1	
-33	25568-04	C	LINE - Oxygen, low pressure	2	
-34	25568-05	C	LINE - Oxygen, low pressure	1	
-35	25568-06	C	LINE - Oxygen, low pressure	1	
-36	754 761	BD	ELBOW	1	
-37	756 302	CD	TEE - Low pressure	1	
-38	756 300		TUBE ASSEMBLY - High pressure	1	
-39	755 946		"O" RING - Tube assembly	1	
-40	756 504		VALVE ASSEMBLY - Recharge	1	
-41	753 942		CHART - Instrument and duration	1	
-42	757 826		CAP - Low pressure	1	
-43	753 435		BRACKET ASSEMBLY - Cylinder mounting	2	
-44	753 943		CYLINDER AND REGULATOR ASSEMBLY	1	
-44a	756 038		REGULATOR ASSEMBLY - Oxygen	1	
-45	756 507		RELIEF VALVE - Regulator assembly	1	
-46	756 505		VALVE ASSEMBLY - Charging	1	
-47	753 947		CORE - Valve assembly	1	
-48	756 302	CD	TEE - Low pressure	2	
-49	754 761	D	ELBOW	1	
-50	753 944	D	CONNECTOR	1	
-51	756 303	D	TEE	2	
-52	753 945	D	CONNECTOR	2	
-53	756 304	D	TEE - High pressure	1	
-54	754 762	D	ELBOW	1	
-55	753 437		BRACKET ASSEMBLY - Control cable	1	
-56	752 504		NUT - Flareless fitting (1/8")	AR	
-57	751 811		FERRULE - Flareless fitting, front (1/8")	AR	
-58	751 812		FERRULE - Flareless fitting, back (1/8")	AR	
-59	752 505		NUT - Flareless fitting (1/4")	AR	
-60	751 813		FERRULE - Fitting, front (1/4")	AR	
-61	751 814		FERRULE - Fitting, back (1/4")	AR	
-62	22369-31		TUBE - Drain	1	
-63	24623-00		TUBE ASSEMBLY - Drain	1	
-64	454 833		CLAMP - (SAE #6)	2	
-65	16633-67	C	HOSE	1	
-66	25568-14	C	LINE - Oxygen, low pressure	1	
-67	25568-10	C	LINE - Oxygen, high pressure	2	
-68	25568-11	C	LINE - Oxygen, low pressure	1	
-69	25568-12	C	LINE - Oxygen, low pressure	1	
-70	25568-13	C	LINE - Oxygen, low pressure	1	
-71	753 081	CD	UNION	1	
-72	756 301	CD	TEE	1	
-73	31978-15	C	LINE - Oxygen, low pressure	1	

A - Used on airplanes with serial numbers 24-4247, 24-4300 to 24-4782, 24-4784 to 24-4803 inclusive.
B - Used when oxygen lines are installed above the headlining.
C - Used when oxygen lines are installed back of side panels.
D - Nuts and ferrules supplied with fitting.

When ordering, always specify Part Number, Description and Serial Number of Aircraft

Figure and Index Number	Part Number	Code	NOMENCLATURE	No. Req.	SERIAL NUMBERS AFFECTED
15B-	25542	E	DRAWING - Oxygen System Installation		
	25724	B	DRAWING - Oxygen System Installation		
-1	19802-05		PLATE ASSEMBLY - Access	1	
-2	25392-02		CLIP - Mounting channel attachment	1	
-3	25392-03		CLIP - Mounting channel attachment	1	
-4	25392-04		CLIP - Mounting channel attachment	1	
-5	25393-00		PLATE - Recharge valve mounting	1	
	25697-00		PLATE - Recharge valve mounting (with drain take-off)	1	
-6	25394-00		PLATE ASSEMBLY - Valve mounting	1	
-7	25395-00		CHANNEL ASSEMBLY - Cylinder mounting, rear	1	
-8	25396-00		CHANNEL ASSEMBLY - Cylinder mounting, front	1	
-9	25397-00		CABLE ASSEMBLY - Cylinder restraining	1	
-10	25603-00		PLATE - Reinforcement, valve mounting	1	
-11	83302-24		SPRING - Control cable	1	
-12	453 732		BUSHING - Snap (#SB-375-4)	4	
-13	754 769		ELBOW - Pressure gauge	1	
-14	751 913	C	GAUGE ASSEMBLY - Oxygen (with mounting bracket)	1	
	751 896	D	GAUGE ASSEMBLY - Oxygen (with mounting bracket)	1	
-15	752 355		LENS - Gauge assembly	1	
-16	753 433		BEZEL - Gauge assembly	1	
-17	753 938		CABLE ASSEMBLY - Push-pull control	1	
-18	752 581		OUTLET ASSEMBLY - Oxygen	6	
-19	757 213		PLATE - Outlet assembly, instruction	6	
-20	754 547		DECAL - Control cable	1	
-21	474 055		MASK ASSEMBLY - Oxygen, nasal type, 2.0 LPM (crew)	AR	
	474 085		MASK ASSEMBLY - Oxygen, sky mask, 2.0 LPM (crew)	AR	
	474 087		MASK ASSEMBLY - Oxygen, sky mask, 1.5 LPM (passenger)	AR	
	753 743		MASK ASSEMBLY - Oxygen, oronasal with microphone, 2.0 LPM (pilot)	1	
-22	753 974		COUPLING - Oxygen plug-in, 2.0 LPM	AR	
	753 975		COUPLING - Oxygen plug-in, 1.5 LPM	AR	
-23	753 074		TUBING - Plastic, oxygen mask (5' length)	1	
	753 319		TUBING - Rubber, oxygen mask (4 1/2' length)	1	
-24	752 122		FLOW - Indicator assembly	1	
-25	25951-00		BRACKET - Reinforcement	2	
-26	757 810		COUPLING - Oxygen filler	1	
-27	753 941		COUPLING - Oxygen plug-in, therapeutic	AR	
-28	31978-11		LINE - Oxygen, high pressure	1	
-29	25568-08		LINE - Oxygen, high pressure	1	
-30	31978-15		LINE - Oxygen, low pressure	1	

A - Used on airplanes with serial numbers 24-4247, 24-4300 to 24-4782, 24-4784 to 24-4803 inclusive.
B - Used when oxygen lines are installed back of side panels.
C - Used on airplanes with serial numbers 24-4247, 24-4300 to 24-4716, 24-4718 to 24-4722 and 24-4724.
D - Used on airplanes with serial numbers 24-4717, 24-4723, 24-4725 and up.
E - Used when oxygen lines are installed above the headlining.

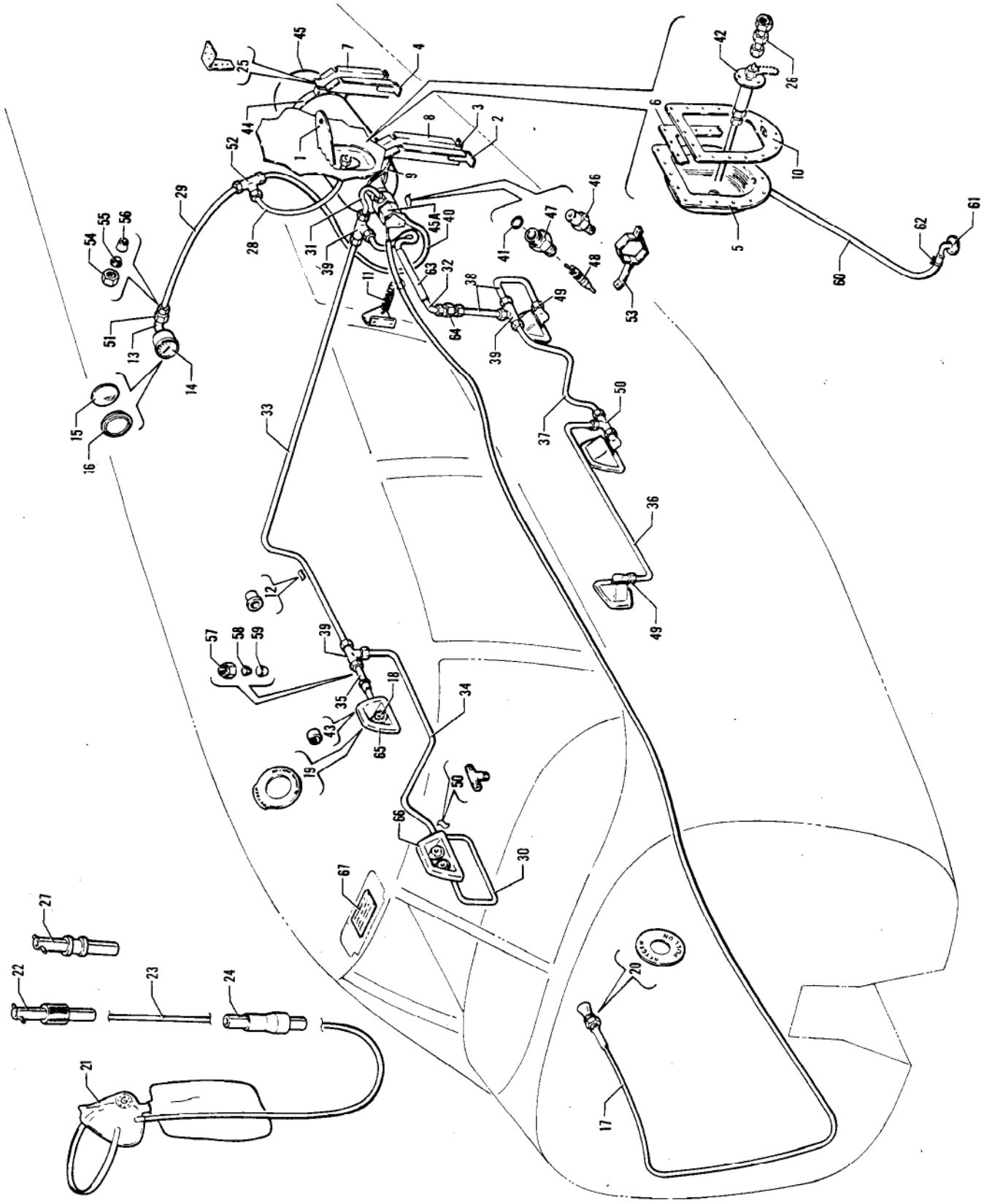

Figure 15C. Oxygen System Installation
(Serial Nos. 24-4783, 24-4804 and up)

Figure and Index Number	Part Number	Code	NOMENCLATURE	No. Req.	SERIAL NUMBERS AFFECTED
15C-	26682		DRAWING - Oxygen System Installation		
-1	19802-05		PLATE ASSEMBLY - Access	1	
-2	25392-02		CLIP - Mounting channel attachment	1	
-3	25392-03		CLIP - Mounting channel attachment	1	
-4	25392-04		CLIP - Mounting channel attachment	1	
-5	25697-00		PLATE - Recharge valve mounting (with drain take-off)	1	
-6	25394-00		PLATE ASSEMBLY - Valve mounting	1	
-7	25395-00		CHANNEL ASSEMBLY - Cylinder mounting, rear	1	
-8	25396-00		CHANNEL ASSEMBLY - Cylinder mounting, front	1	
-9	25397-00		CABLE ASSEMBLY - Cylinder restraining	1	
-10	25603-00		PLATE - Reinforcement, valve mounting	1	
-11	83302-24		SPRING - Control cable	1	
-12	453 732		BUSHING - Snap (#SB-375-4)	12	
-13	754 769		ELBOW - Pressure gauge	1	
-14	751 896		GAUGE ASSEMBLY - Oxygen (includes mounting bracket)	1	
-15	752 355		LENS - Gauge assembly	1	
-16	753 433		BEZEL - Gauge assembly	1	
-17	753 938		CABLE ASSEMBLY - Push-pull control	1	
-18	752 581		OUTLET ASSEMBLY - Oxygen	6	
-19	757 213		PLATE - Outlet assembly, instruction	6	
-20	754 547		DECAL - Control cable	1	
-21	474 055		MASK ASSEMBLY - Oxygen, nasal type, 2.0 LPM (crew)	AR	
	474 085		MASK ASSEMBLY - Oxygen, sky mask, 2.0 LPM (crew)	AR	
	474 087		MASK ASSEMBLY - Oxygen, sky mask, 1.5 LPM (passenger)	AR	
	753 743		MASK ASSEMBLY - Oxygen, oronasal with microphone, 2.0 LPM (pilot)	1	
-22	753 974		COUPLING - Oxygen plug-in, 2.0 LPM	AR	
	753 975		COUPLING - Oxygen plug-in, 1.5 LPM	AR	
-23	753 074		TUBING - Plastic. oxygen mask (5' length)	1	
	756 319		TUBING - Rubber, oxygen mask (4 1/2' length)	1	
-24	752 122		FLOW - Indicator assembly	1	
-25	25951-00		BRACKET - Reinforcement	2	
-26	757 810		COUPLING - Oxygen filler	1	
-27	753 941		COUPLING - Oxygen plug-in, therapeutic	AR	
-28	31978-11		LINE - Oxygen, high pressure	1	
-29	25568-08		LINE - Oxygen, high pressure	1	
-30	25568-18		LINE - Oxygen, low pressure	1	
-31	31978-15		LINE - Oxygen, low pressure	1	
-32	25568-12		LINE - Oxygen, low pressure	1	
-33	25568-15		LINE - Oxygen, low pressure	1	
-34	25568-16		LINE - Oxygen, low pressure	1	
-35	25568-17		LINE - Oxygen, low pressure	1	
-36	25568-21		LINE - Oxygen, low pressure	1	
-37	25568-19		LINE - Oxygen, low pressure	1	
-38	25568-20		LINE - Oxygen, low pressure	2	
-39	756 302	A	TEE - Low pressure	3	
-40	756 300		TUBE ASSEMBLY - High pressure	1	
-41	755 946		"O" RING - Tube assembly	1	
			A - Nuts and ferrules supplied with fitting.		

When ordering, always specify Part Number, Description and Serial Number of Aircraft

Figure and Index Number	Part Number	Code	NOMENCLATURE	No. Req.	SERIAL NUMBERS AFFECTED
15C-42	756 504		VALVE ASSEMBLY - Recharge	1	
-43	757 826		CAP - Low pressure	2	
-44	758 110		BRACKET ASSEMBLY - Cylinder mounting	2	
-45	753 943		CYLINDER AND REGULATOR ASSEMBLY	1	
-45a	756 038		REGULATOR ASSEMBLY - Oxygen	1	
-46	756 507		RELIEF VALVE - Regulator assembly	1	
-47	756 505		VALVE ASSEMBLY - Charging	1	
-48	753 947		CORE - Valve assembly	1	
-49	753 944	A	CONNECTOR	4	
-50	756 303	A	TEE	2	
-51	753 945	A	CONNECTOR	2	
-52	756 304	A	TEE - High pressure	1	
-53	753 437		BRACKET ASSEMBLY - Control cable	1	
-54	752 504		NUT - Flareless fitting (1/8")	AR	
-55	751 811		FERRULE - Flareless fitting, front (1/8")	AR	
-56	751 812		FERRULE - Flareless fitting, back (1/8")	AR	
-57	752 505		NUT - Flareless fitting (1/4")	AR	
-58	751 813		FERRULE - Flareless fitting, front (1/4")	AR	
-59	751 814		FERRULE - Flareless fitting, back (1/4")	AR	
-60	22369-31		TUBE - Drain	1	
-61	24623-00		TUBE ASSEMBLY - Drain	1	
-62	454 833		CLAMP - (SAE #6)	2	
-63	16633-67		HOSE	1	
-64	753 081	A	UNION	1	
-65	26524-02		PLATE - Oxygen outlet trim, beige	4	
	26524-03		PLATE - Oxygen outlet trim, black	4	
	26524-04		PLATE - Oxygen outlet trim, white	4	
-66	26535-02		PLATE - Oxygen outlet trim, beige	1	
	26535-03		PLATE - Oxygen outlet trim, black	1	
	26535-04		PLATE - Oxygen outlet trim, white	1	
-67	753 942		CHART - Instrument and duration	1	

A - Nuts and ferrules supplied with fitting.

When ordering, always specify Part Number, Description and Serial Number of Aircraft

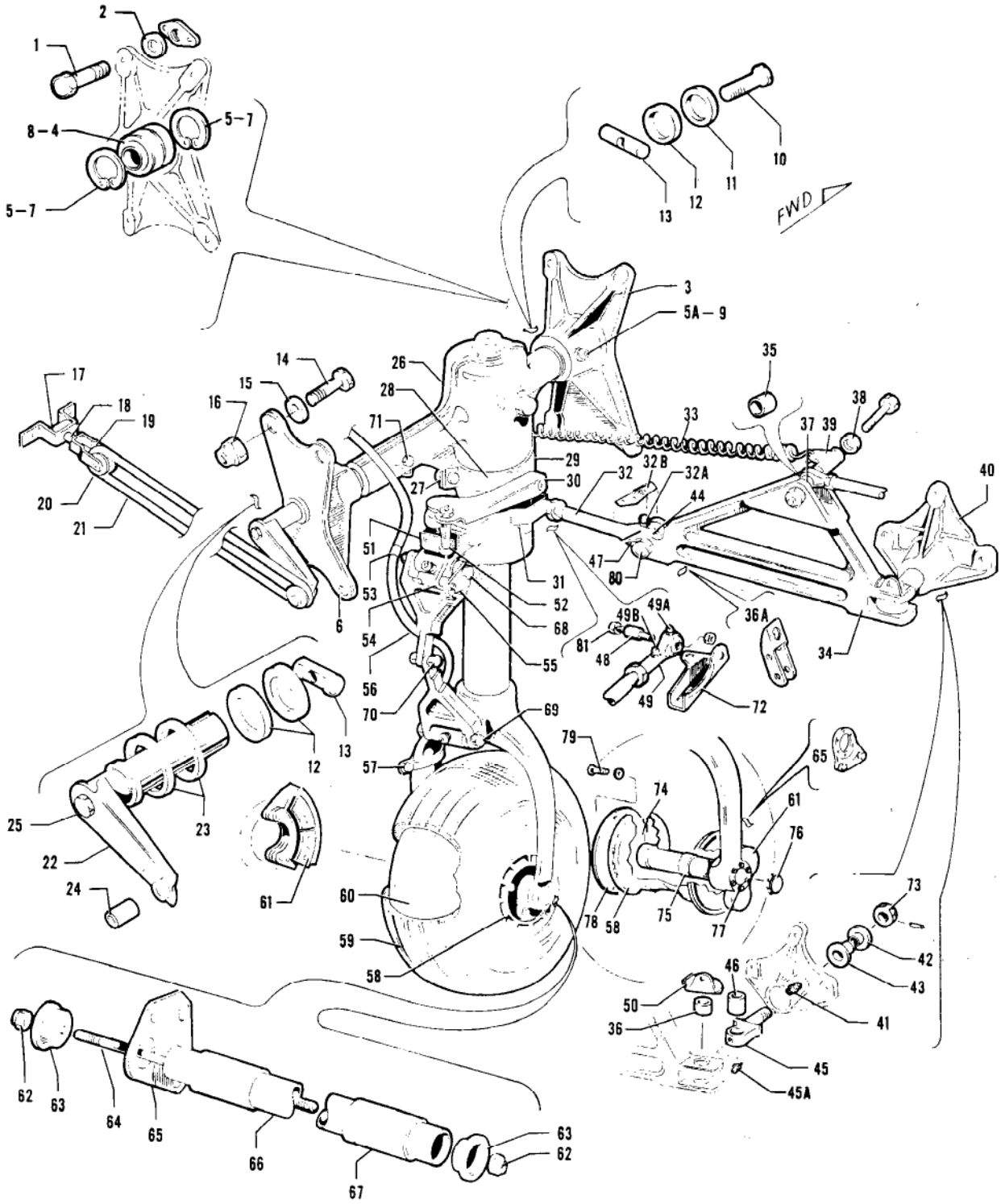

Figure 16. Main Landing Gear Installation

Figure and Index Number	Part Number	Code	NOMENCLATURE	No. Req.	SERIAL NUMBERS AFFECTED
16-	20826	XY	DRAWING - Landing Gear Installation		
	22834	Z	DRAWING - Landing Gear Installation		
	24844	A	DRAWING - Landing Gear Installation		
	26462	V	DRAWING - Landing Gear Installation		24-4783, 24-4804 and up
-1	401 187		BOLT - (AN5-7A)	8	
-2	407 586		WASHER - (AN960-516L)	8	
-3	20757-00		FITTING ASSEMBLY - Main gear forward attachment, left	1	
	20757-01		FITTING ASSEMBLY - Main gear forward attachment, right	1	
-4	452 367	XY	BEARING - Spherical (RB-16)	1	24-1 to 24-2753 inclusive
	751 454		BEARING - Spherical (RSS-16)	1	24-2754 and up, 26-2 and up
-5	484 719		RING - Retaining (#5008-175)	2	
-5a	460 691		FITTING - Lubricator (AN944-101)	1	
-6	20393-00		FITTING ASSEMBLY - Main gear left rear attachment	1	
	20394-00		FITTING ASSEMBLY - Main gear right rear attachment	1	
-7	484 719		RING - Retaining (#5008-175)	2	
-8	452 367	XY	BEARING - Spherical (RB-16)	1	24-1 to 24-2753 inclusive
	751 454		BEARING - Spherical (RSS-16)	1	24-2754 and up, 26-2 and up
-9	460 691		FITTING - Lubricator (AN944-101)	1	
-10	400 014	B	BOLT - (AN4-21A) or #401 318 (AN4-20A)	2	
-11	80122-91		WASHER	2	
-12	14843-20		BUSHING - (.125)	AR	
	14843-93		BUSHING - (.062)	AR	
	19513-10		WASHER - (.035)	AR	
-13	406 660		NUT - Barrel (#1452-048)	4	
-14	400 004		BOLT - (AN4-7A)	8	
-15	407 585		WASHER - (AN960-416L)	8	
-16	404 888		NUT - (MS20365-428C)	8	
-17	20844-00		NUT - Bungee roller bracket attachment	2	
-18	401 054		BOLT - (3/8 x 1-1/4)	4	
-19	20845-00		BRACKET - Bungee roller	2	
-20	18081-00		ROLLER	6	
-21	31322-07		CORD - Shock, main gear bungee	2	
-22	20846-00	XY	ARM ASSEMBLY - Landing gear bungee, left	1	
	20846-01	XY	ARM ASSEMBLY - Landing gear bungee, right	1	
	20846-06	VZ	ARM ASSEMBLY - Landing gear bungee, left	1	
	20846-07	VZ	ARM ASSEMBLY - Landing gear bungee, right	1	
-23	14843-20		BUSHING - Shim (.125)	AR	
	14843-93		BUSHING - Shim (.062)	AR	
-24	14175-50		BUSHING	4	
-25	401 347	B	BOLT - (AN4-55A) or #401 346 (AN4-54A)	2	

A - Used on PA-24-260 airplanes with serial numbers 24-3642, 24-4000 to 24-4782, 24-4784 to 24-4803 inclusive.
B - Measure present bolt to ascertain accurate replacement.
V - Used on PA-24-260 airplanes only.
X - Used on PA-24-180 airplanes only.
Y - Used on PA-24-250 airplanes only.
Z - Used on PA-24-400 airplanes only.

Figure and Index Number	Part Number	Code	NOMENCLATURE	No. Req.	SERIAL NUMBERS AFFECTED
16-26	20798-04	BDXY	STRUT ASSEMBLY - Main gear, left	1	
	20798-06	BEXY	STRUT ASSEMBLY - Main gear, left	1	
	24681-00	CDZ	STRUT ASSEMBLY - Main gear, left	1	
	27142-00	CEZ	STRUT ASSEMBLY - Main gear, left	1	
	24810-00	ACD	STRUT ASSEMBLY - Main gear, left	1	
	24810-02	CDV	STRUT ASSEMBLY - Main gear, left	1	24-4783, 24-4804 to 24-5010 incl.
	27143-00	CEV	STRUT ASSEMBLY - Main gear, left	1	24-3642, 24-4000 and up
	20798-05	BDXY	STRUT ASSEMBLY - Main gear, right	1	
	20798-07	BEXY	STRUT ASSEMBLY - Main gear, right	1	
	24681-01	CDZ	STRUT ASSEMBLY - Main gear, right	1	
	24681-05	CEZ	STRUT ASSEMBLY - Main gear, right	1	
	24810-01	ACD	STRUT ASSEMBLY - Main gear, right	1	
	24810-03	CDV	STRUT ASSEMBLY - Main gear, right	1	24-4783, 24-4804 to 24-5010 incl.
	27144-00	CEV	STRUT ASSEMBLY - Main gear, right	1	24-3642, 24-4000 and up
-27	21173-00		SPACER - Spring attachment	4	
-28	21174-00	D	STRAP - Main gear spring attachment	2	
	27055-00	E	STRAP - Main gear spring attachment	2	
-29	21175-00	D	BRACKET ASSEMBLY - Main gear spring attachment, left	1	
	27056-00	E	BRACKET ASSEMBLY - Main gear spring attachment, left	1	
	21175-01	D	BRACKET ASSEMBLY - Main gear spring attachment, right	1	
	27056-01	E	BRACKET ASSEMBLY - Main gear spring attachment, right	1	
-30	21220-00	XYZ	ARM - Gear switch actuator	1	
-31	21221-00	XYZ	BRACKET - Gear safety switch mounting, left	1	
	24773-00	V	BRACKET ASSEMBLY - Gear safety switch mounting, left	1	
-32	20768-00	XY	LINK ASSEMBLY - Main gear side brace lower, left	1	
	20768-01	XY	LINK ASSEMBLY - Main gear side brace lower, right	1	
	22577-00	Z	LINK - Main gear side brace, lower	2	
	24911-00	A	LINK ASSEMBLY - Main gear brace, lower	2	
	25046-00	V	LINK ASSEMBLY - Main gear brace, lower	2	24-4783, 24-4804 and up
-32a	460 691	XYZ	FITTING - Lubrication (AN944-101)	1	
	460 860	V	FITTING - Lubrication (MS15001-2)	1	
-32b	24915-00	V	BRACKET - Main gear limit switch	1	
-33	83302-40		SPRING - Coil	2	

A - Used on PA-24-260 airplanes with serial numbers 24-3642, 24-4000 to 24-4782, 24-4784 to 24-4803 inclusive.
B - See Figure 19 for component parts.
C - See Figure 19A for component parts.
D - Used if Piper Part No. 20750-4 (left strut) or 20750-5 (right strut) is forged on Landing Gear Strut Housing.
E - Used if Piper Part No. 27016 (left strut) or 27016-1 (right strut) is forged on Landing Gear Strut Housing.
V - Used on PA-24-260 airplanes only.
X - Used on PA-24-180 airplanes only.
Y - Used on PA-24-250 airplanes only.
Z - Used on PA-24-400 airplanes only.

Figure and Index Number	Part Number	Code	NOMENCLATURE	No. Req.	SERIAL NUMBERS AFFECTED
16-34	20767-00	XYZ	LINK ASSEMBLY - Main gear side brace, upper	2	
	20767-04	V	LINK ASSEMBLY - Main gear side brace, upper, left	1	
	20767-03	V	LINK ASSEMBLY - Main gear side brace, upper, right	1	
-35	20737-08		BUSHING	2	
-36	14843-16		BUSHING	4	
-36a	24912-00	V	BRACKET - Main gear limit switch, left	1	
	24912-01	V	BRACKET - Main gear limit switch, right	1	
-37	14843-79		BUSHING	2	
-38	14843-69		BUSHING	2	
-39	21178-00		SWIVEL ASSEMBLY - Side brace spring attachment	2	
-40	20760-00	XY	FITTING ASSEMBLY - Main gear side brace support, left	1	
	20760-01	XY	FITTING ASSEMBLY - Main gear side brace support, right	1	
	22509-00	VZ	FITTING ASSEMBLY - Main gear side brace support, left	1	
	22509-01	VZ	FITTING ASSEMBLY - Main gear side brace support, right	1	
-41	460 691		FITTING - Lubricator (AN944-101)	1	
-42	20737-06	XY	BUSHING	1	
	20737-13	VZ	BUSHING	1	
-43	20737-05	XY	BUSHING	1	
	20737-14	VZ	BUSHING	1	
-44	14843-60		BUSHING	2	
-45	20829-00	XY	STUD - Main gear side brace	2	
	22512-00	VZ	STUD - Main gear side brace	2	
-45a	460 687		FITTING - Lubricator (#1736)	1	
-46	14843-30		BUSHING	2	
-47	21104-00	XYZ	PLATE - Main gear switch actuator, LH	1	
	21104-01	XYZ	PLATE - Main gear switch actuator, RH	1	
-48	14843-29	XY	BUSHING	4	24-1 to 24-323 inclusive
	21822-00	XY	BUSHING	4	24-324 and up
	21822-00	A	BUSHING	4	
	19513-56	VZ	WASHER	4	24-4783, 24-4804 and up, 26-2 and up
-49	452 382	XY	BEARING - Rod end (#HFX-8BG) (23412-00)	2	
	452 382	A	BEARING - Rod end (#HFX-8BG) (23412-00)	2	
	22943-00	VZ	BEARING ASSEMBLY - Rod end	2	24-4783, 24-4804 and up, 26-2 and up
-49a	751 794	VXY	FITTING - Lubrication, bearing center (10-32A)	1	
-49b	751 795	VXY	FITTING - Lubrication, bearing shank (10-32)	1	
-50	21206-00		BRACKET - Wire support, left	1	
	21206-01		BRACKET - Wire support, right	1	
-51	487 805	XY	SWITCH - Safety, left	1	24-1 to 24-655 inclusive
	487 820	XYZ	SWITCH - Safety, left	1	24-656 and up, 26-2 and up
	487 864	V	SWITCH - Safety, left	1	
-52	488 327	XYZ	TERMINAL - Clevis (AN665-21R) Left	1	
-53	21100-00		CLAMP ASSEMBLY - Lower brake hose, upper	2	
-54	21219-00	XYZ	ROD - Gear safety switch actuating, left	1	
-55	21215-00	XYZ	LINK - Gear safety switch arm, left	1	

A - Used on PA-24-260 with serial numbers 24-3642, 24-4000 to 24-4782 inclusive, 24-4784 to 24-4803 inclusive.
V - Used on PA-24-260 airplanes only.
X - Used on PA-24-180 airplanes only.
Y - Used on PA-24-250 airplanes only.
Z - Used on PA-24-400 airplanes only.

Figure and Index Number	Part Number	Code	NOMENCLATURE	No. Req.	SERIAL NUMBERS AFFECTED
16-56	17766-33	XY	HOSE ASSEMBLY - Brake, lower	2	24-1 to 24-3295 inclusive
	17766-71	XY	HOSE ASSEMBLY - Brake, lower	2	24-3296 and up
	17766-33	Z	HOSE ASSEMBLY - Brake, lower	2	26-2 to 26-129 inclusive
	17766-33	V	HOSE ASSEMBLY - Brake, lower	2	24-3642, 24-4000 to 24-4138 incl.
	17766-71	VZ	HOSE ASSEMBLY - Brake, lower	2	24-4139 and up
-57	21060-00	XY	CLAMP - Lower brake hose, lower	2	
	25449-00	VZ	CLAMP - Lower brake hose, lower	2	
-58	451 765	AXY	WHEEL ASSEMBLY - Main (#3070)	2	24-1 to 24-3306 inclusive
	451 778	AXY	WHEEL ASSEMBLY - Main (#40-58)	2	24-3307 and up
	451 781	AZ	WHEEL ASSEMBLY - Main (#3-1038-1)	2	26-2 to 26-129 inclusive
	551 752	AZ	WHEEL ASSEMBLY - Main (#40-90)	2	26-130 and up
	551 750	AV	WHEEL ASSEMBLY - Main (#40-84)	2	
-59	451 720	X	TIRE - 6:00 x 6, 4 ply, Main	2	
	451 724	VYZ	TIRE - 6:00 x 6, 6 ply, Main	2	
-60	451 735		TUBE - 6:00 x 6	2	
-61	451 716	BXY	BRAKE ASSEMBLY - Main (#3000-250)	2	24-1 to 24-3295 inclusive
	551 701	BVXY	BRAKE ASSEMBLY - Main (#30-41)	2	24-3296 and up
	551 704	BZ	BRAKE ASSEMBLY - Main (#2-852-1)	2	26-2 to 26-129 inclusive
	551 702	BZ	BRAKE ASSEMBLY - Main (#30-23)	2	26-130 and up
-62	404 838	XY	NUT - Axle (MS20364-624C)	4	
-63	20825-00	XY	PLUG - Wheel end	4	
-64	20854-00	XY	ROD - Wheel axle tie	3	
-65	20824-00	XY	PLATE ASSEMBLY - Brake torque, left	1	
	20824-01	XY	PLATE ASSEMBLY - Brake torque, right	1	
	451 782	CVZ	PLATE ASSEMBLY - Brake torque (#75-29)	2	24-3642, 24-4000 and up, 26-130 and up
-66	86062-86	XY	AXLE - Landing gear wheel	3	
-67	86062-87	XY	SPACER - Main wheel	4	
-68	402 343		BOLT - (AN175-34) Upper torque link, left	1	
	402 345		BOLT - (AN175-33) Upper torque link, right	1	
	424 052		PIN - (AN380-2-3) Upper torque link	2	
	404 102		NUT - (AN310-5) Upper torque link	2	
	407 586		WASHER - (AN960-516L) Upper torque link	4	
-69	402 344		BOLT - (AN175-32) Lower torque link	2	
	424 052		PIN - (AN380-2-3) Lower torque link	2	
	404 102		NUT - (AN310-5) Lower torque link	2	
	407 586		WASHER - (AN960-516L) Lower torque link	4	
-70	402 313		BOLT - (AN174-13) Torque link joint	2	
	424 052		PIN - (AN380-2-3) Torque link joint	2	
	404 101		NUT - (AN310-4) Torque link joint	2	
	407 565		WASHER - (AN960-416) Torque link joint	4	
	407 585		WASHER - (AN960-416L) Torque link joint, center	2	
-71	20828-00		STUD	4	

A - See Figure 22 for component parts.
B - See Figure 21 for component parts.
C - Used only when Cleveland wheel and brake assemblies are installed.
V - Used on PA-24-260 airplanes only.
X - Used on PA-24-180 airplanes only.
Y - Used on PA-24-250 airplanes only.
Z - Used on PA-24-400 airplanes only.

Figure and Index Number	Part Number	Code	NOMENCLATURE	No. Req.	SERIAL NUMBERS AFFECTED
16-72	21068-00	XY	BRACKET ASSEMBLY - Left gear door	1	
	21068-01	XY	BRACKET ASSEMBLY - Right gear door	1	
	24819-00	DZ	BRACKET ASSEMBLY - Left gear door	1	
	24819-01	DZ	BRACKET ASSEMBLY - Right gear door	1	
	24842-00	EV	BRACKET ASSEMBLY - Left gear door	1	
	24842-01	EV	BRACKET ASSEMBLY - Right gear door	1	
-73	407 589	XY	WASHER - (AN960-816L)	2	
	407 597	VZ	WASHER - (AN960-916L)	2	
	404 397	XY	NUT - (AN320-8)	2	
	404 398	VZ	NUT - (AN320-9)	2	
	480 682	XY	PIN - Roll (#59-022-094-0750)	2	
	480 691	VZ	PIN - Roll (#59-028-125-0875)	2	
-74	424 071	VZ	PIN - Cotter (AN380-4-8)	2	
-75	61402-84	BZ	BUSHING - Wheel	2	26-2 to 26-129 inclusive
	86062-102	AZ	BUSHING - Wheel	2	26-130 and up
	86062-100	V	BUSHING - Wheel	2	
-76	453 639	VZ	BUTTON - Plug (#HS-50726)	2	
-77	400 020	BZ	BOLT - (AN4-27A)	12	26-2 to 26-129 inclusive
	400 019	AVZ	BOLT - (AN4-26A)	12	24-3642, 24-4000 and up, 26-130 and up
	80122-86	VZ	WASHER	12	
	404 888	VZ	NUT - (MS20365-428C)	12	
-78	24918-00	AVZ	COVER - Wheel	2	24-3642, 24-4000 and up, 26-130 and up
-79	415 445	AVZ	SCREW - (AN526-8R4)	6	24-3642, 24-4000 and up, 26-130 and up
	407 128	AVZ	LOCK WASHER - (AN936-B10)	6	24-3642, 24-4000 and up, 26-130 and up
-80	400 757		BOLT - (AN26-21)	1	
	407 587		WASHER - (AN960-616L)	1	
	404 395		NUT - (AN320-6)	1	
	424 059		PIN - Cotter (AN380-3-3)	1	
-81	400 313	C	BOLT - (AN8-34)	1	
	407 569	C	WASHER - (AN960-816)	1	
	404 900	C	NUT - (MS20365-820C)	1	
	400 368	D	BOLT - (AN9-35)	1	
	407 570	D	WASHER - (AN960-916)	1	
	404 913	D	NUT - (MS20365-918C)	1	

A - Used only when Cleveland wheel and brake assemblies are installed.
B - Used only when Goodrich wheel and brake assemblies are installed.
C - Used on PA-24-180 and PA-24-250 with serial numbers 24-1 and up, PA-24-260 with serial numbers 24-3642, 24-4000 to 24-4782, 24-4784 to 24-4803 inclusive.
D - Used on PA-24-260 with serial numbers 24-4783, 24-4804 and up, and PA-24-400 with serial numbers 26-2 and up.
E - Used on PA-24-260 with serial numbers 24-3642, 24-4000 to 24-4782, 24-4784 to 24-4803 inclusive.
V - Used on PA-24-260 airplanes only.
X - Used on PA-24-180 airplanes only.
Y - Used on PA-24-250 airplanes only.
Z - Used on PA-24-400 airplanes only.

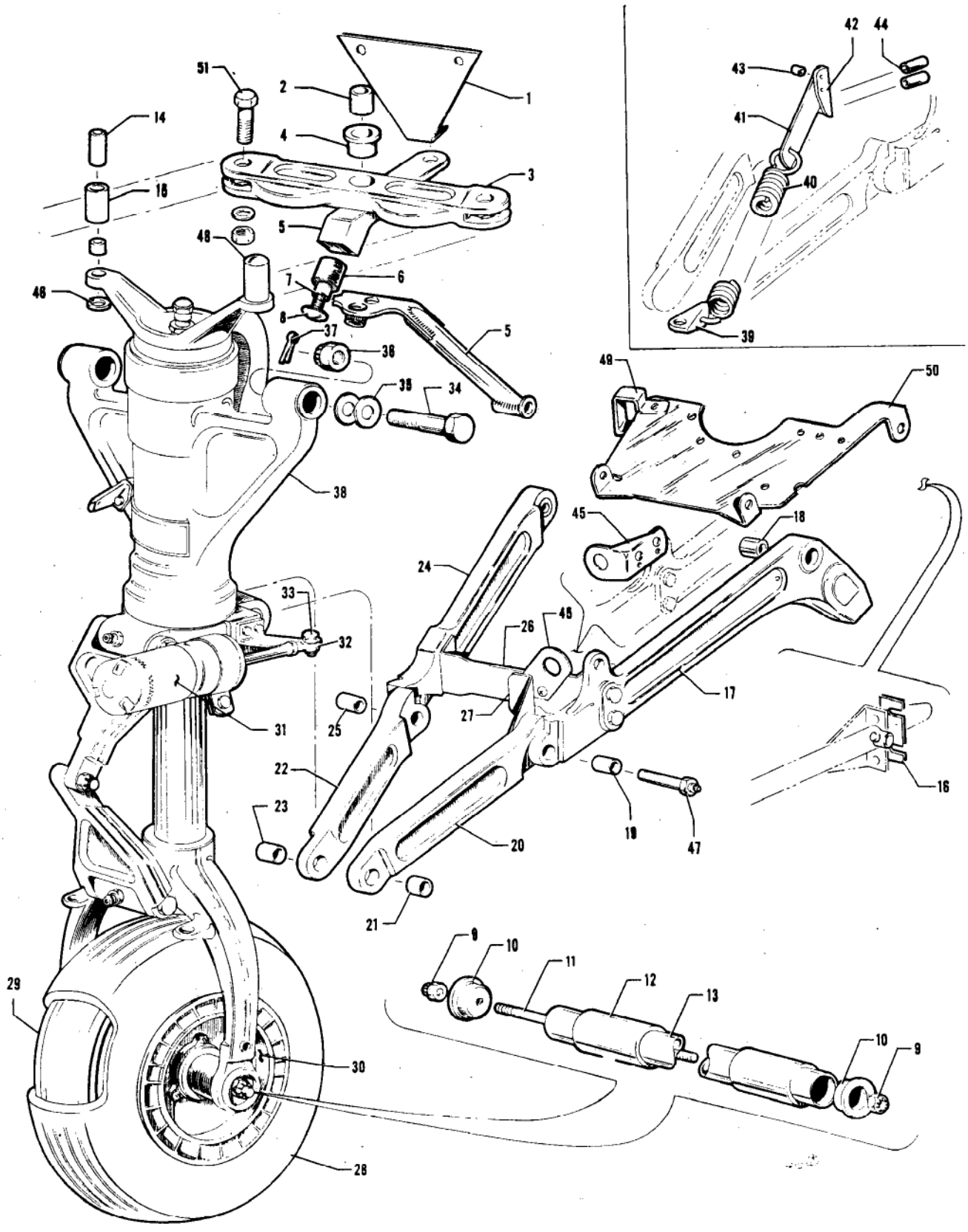

Figure 16A. Nose Gear Installation

Figure and Index Number	Part Number	Code	NOMENCLATURE	No. Req.	SERIAL NUMBERS AFFECTED
16A-	20826	VXY	DRAWING - Landing Gear Installation		
	20826	C	DRAWING - Landing Gear Installation		
	26462	V	DRAWING - Landing Gear Installation		24-4783, 24-4804 and up
	22834	Z	DRAWING - Landing Gear Installation		26-2 to 26-129 inclusive
	23679	Z	DRAWING - Landing Gear Installation		26-130 and up
-1	21722-00	AX	BRACKET - Nose gear aligner support	1	
	21726-00	AY	BRACKET - Nose gear aligner support	1	
	21726-00	AC	BRACKET - Nose gear aligner support	1	
-2	14976-17	A	BUSHING	1	
-3	21708-00	A	BELLCRANK ASSEMBLY - Nose wheel steering	1	
-4	21831-02	A	BEARING	1	
-5	21725-00	AVXY	ALIGNER ASSEMBLY - Nose gear	1	
	22863-00	Z	ALIGNER ASSEMBLY - Nose gear	1	
-6	14976-15	AB	BUSHING	1	
-7	14976-16	AB	BUSHING	1	
-8	411 349	AB	SCREW - (With nylon insert)	1	
-9	404 838		NUT - Axle (MS20364-624C)	2	
-10	20825-00		PLUG - Wheel end	2	
-11	20854-00		ROD - Wheel axle tie	1	
-12	86062-88	D	BUSHING - Nose wheel spacer	2	
	31786-03	E	BUSHING - Nose wheel spacer	2	
-13	86062-86		AXLE - Landing gear wheel	1	
-14	14976-12		BUSHING - .438 O. D. x 1-1/16 L	2	24-1 to 24-1683 inclusive, 24-1748 and up, 26-2 and up
	61402-12	XY	BUSHING - .438 O. D. x 3/4 L	2	24-1684 to 24-1748 inclusive
-15	14976-13		BUSHING - 3/4 O. D. x 1-1/32 L	AR	24-1 to 24-1683 inclusive, 24-1749 and up, 26-2 and up
	61402-13	XY	BUSHING - 3/4 O. D. x 23/32 L	AR	24-1684 to 24-1748 inclusive
	14976-21		BUSHING - 11/16 O. D. x 1-1/32 L	AR	24-1 to 24-1683 inclusive, 24-1749 and up, 26-2 and up
	61402-14	XY	BUSHING - 11/16 O. D. x 23/32 L	AR	24-1684 to 24-1748 inclusive
	14976-23		BUSHING - 5/8 O. D. x 1-1/32 L	AR	24-1 to 24-1683 inclusive, 24-1749 and up, 26-2 and up
	61402-15	XY	BUSHING - 5/8 O. D. x 23/32 L	AR	24-1684 to 24-1748 inclusive
-16	21820-02		SHIM - Engine mount .016	AR	
	21820-03		SHIM - Engine mount .020	AR	
	21820-04		SHIM - Engine mount .032	AR	

A - Used only when nose strut serial number 638 and up is installed.
B - Not a component part of 22863-00 assembly. Must be ordered separately.
C - Used on PA-24-260 with serial numbers 24-3642, 24-4000 to 24-4782, 24-4784 to 24-4803 inclusive.
D - Used with Model No. 38501 Nose Wheel Assembly.
E - Used with Model No. 40-76B Nose Wheel Assembly.
V - Used on PA-24-260 airplanes only.
X - Used on PA-24-180 airplanes only.
Y - Used on PA-24-250 airplanes only.
Z - Used on PA-24-400 airplanes only.

Figure and Index Number	Part Number	Code	NOMENCLATURE	No. Req.	SERIAL NUMBERS AFFECTED
16A-17	754 429	CXY	LINK ASSEMBLY - Nose gear left rear drag	1	24-1 to 24-3225 inclusive
	23109-00		LINK ASSEMBLY - Nose gear left rear drag	1	24-3226 and up, 26-2 and up
-18	14843-19		BUSHING	1	
-19	14843-18		BUSHING	1	
-20	20814-00		LINK ASSEMBLY - Nose gear left front drag	1	
-21	14843-18		BUSHING	2	
-22	20815-00		LINK ASSEMBLY - Nose gear right front drag	1	
-23	14843-18		BUSHING	2	
-24	20819-00	XY	LINK ASSEMBLY - Nose gear right rear drag	1	
	20819-04	VZ	LINK ASSEMBLY - Nose gear right rear drag	1	
-25	14843-18		BUSHING	2	
-26	20821-00	XY	BRACE - Nose gear drag link cross	1	24-1 to 24-986 inclusive
	20821-02	D	BRACE - Nose gear drag link cross	1	
	26807-00	V	BRACE - Nose gear drag link cross	1	24-4783, 24-4804 and up
-27	21102-00	X	PLATE - Nose gear switch actuator	1	24-1 to 24-1476 inclusive
	21698-00	X	PLATE - Nose gear switch actuator	1	24-1477 and up
	21698-00	VYZ	PLATE - Nose gear switch actuator	1	
-28	451 720	VXY	TIRE - 6:00 x 6, 4 ply, Nose	1	
	451 724	Z	TIRE - 6:00 x 6, 6 ply, Nose	1	
-29	451 735		TUBE - 6:00 x 6	1	
-30	451 755	AE	WHEEL ASSEMBLY - Nose (38501)	1	
	451 784	A	WHEEL ASSEMBLY - Nose (40-76B)	1	24-5020, 24-5024 and up
-31	21701-03	BXYZ	DAMPENER ASSEMBLY - Nose wheel shimmy	1	
	21701-03	BV	DAMPENER ASSEMBLY - Nose wheel shimmy	1	24-3642, 24-4000 to 24-4570 incl.
	21701-05	V	DAMPENER ASSEMBLY - Nose wheel shimmy	1	24-4571 and up
-32	11601-03	BXYZ	BOLT - Eye, shimmy dampener	1	
	11601-03	BV	BOLT - Eye, shimmy dampener	1	24-3642, 24-4000 to 24-4570 incl.
	452 357	V	BEARING ASSEMBLY - Shimmy dampener	1	24-4571 and up
-33	400 105	BXYZ	BOLT - (AN4-10)	1	
	400 105	BV	BOLT - (AN4-10)	1	24-3642, 24-4000 to 24-4570 incl.
	400 441	V	BOLT - (AN3-7A)	1	24-4571 and up

A - See Figure 22A for component parts.
B - Order part used on PA-24-260 with serial numbers 24-4571 and up if shimmy dampener incorporates a self-aliguing end bearing.
C - Order part number 23109-00 if Kit 754 429 has been installed.
D - Used on PA-24-180 and PA-24-250 with serial numbers 24-987 and up, PA-24-260 with serial numbers 24-3642, 24-4000 to 24-4782, 24-4784 to 24-4803 inclusive, and PA-24-400 with serial numbers 26-2 and up.
E - Used on PA-24-260 with serial numbers 24-3642, 24-4000 to 24-5019, 24-5021 to 24-5023 inclusive, PA-24-180, PA-24-250 and PA-24-400 airplanes. Part is no longer available. Order Wheel Assembly, Part No. 451 784 and two spacer bushings Part No. 31786-03 when replacing Model No. 38501 Wheel. Order Part No. 451 784 Wheel only, if Model No. 40-76B has previously been installed.
V - Used on PA-24-260 airplanes only.
X - Used on PA-24-180 airplanes only.
Y - Used on PA-24-250 airplanes only.
Z - Used on PA-24-400 airplanes only.

Figure and Index Number	Part Number	Code	NOMENCLATURE	No. Req.	SERIAL NUMBERS AFFECTED
16A-34	402 530		BOLT - (AN178-40)	2	
-35	407 569		WASHER - (AN960-816)	2	
-36	404 105		NUT - (AN310-8)	2	
-37	424 059		PIN - Cotter (AN380-3-3)	2	
-38	21716-00	BCEXY	STRUT ASSEMBLY - Nose gear	1	
	22810-00	ADZ	STRUT ASSEMBLY - Nose gear	1	
	21716-00	DEV	STRUT ASSEMBLY - Nose gear	1	24-3642, 24-4000 to 24-2570 incl.
	21716-04	DV	STRUT ASSEMBLY - Nose gear	1	24-4571 to 24-4782 inclusive, 24-4784 to 24-4803 inclusive
	21716-05	DV	STRUT ASSEMBLY - Nose gear	1	24-4783, 24-4804 and up
-39	21829-00		LUG - Nose gear spring front attachment, right	1	
	21829-01	V	LUG - Nose gear spring front attachment, left	1	24-4783, 24-4804 and up
-40	13098-00		SPRING - Nose gear down lock	1	
	13098-00	V	SPRING - Nose gear down lock	2	24-4783, 24-4804 and up
-41	81262-92		LINK - Nose gear spring attachment	1	
	81262-92	V	LINK - Nose gear spring attachment	2	24-4783, 24-4804 and up
-42	21830-00		LUG - Nose gear spring attachment, right	1	
	21830-01	V	LUG - Nose gear spring attachment, left	1	24-4783, 24-4804 and up
-43	80012-06		BUSHING	1	
	80012-06	V	BUSHING	2	24-4783, 24-4804 and up
-44	14976-32	X	BUSHING	2	
-45	21101-00	X	BRACKET - Nose gear switch	1	24-1 to 24-986 inclusive
	21699-00	Y	BRACKET - Nose gear switch	1	24-105 to 24-986 inclusive
	21868-00	XY	BRACKET - Nose gear switch	1	24-987 and up, 26-2 and up
	24916-00	V	BRACKET - Nose gear switch	1	
-46	407 566	XY	WASHER - (AN960-516)	AR	24-1684 to 24-1748 inclusive
-47	22066-00		BOLT - Special	2	
-48	400 748		BOLT - Steering arm (AN25-36)	2	
	404 394		NUT - Steering arm (AN320-5)	2	
	407 566		WASHER - Steering arm (AN960-516)	4	
	424 051		PIN - Steering arm (AN380-2-2)	2	
-49	25023-00	V	CLAMP - Splatter shield support	1	24-3642, 24-4000 to 24-4803 incl.
-50	25025-00	V	SHIELD - Splatter	1	24-3642, 24-4000 to 24-4803 incl.
-51	401 311		BOLT - (AN4-11A)	2	
	407 565		WASHER - (AN960-416)	2	
	404 888		NUT - (MS20365-428C)	2	

A - Order nose gear strut 22810-03 if shimmy dampener incorporates a self-aligning end bearing.
B - See Figure 19 for component parts.
C - When ordering for replacement of struts, serial numbers 1 to 637 inclusive, order Kit 754 195 also.
D - See Figure 19A for component parts.
E - Order nose gear strut 21716-05 if shimmy dampener incorporates a self-aligning end bearing.
V - Used on PA-24-260 airplanes only.
X - Used on PA-24-180 airplanes only.
Y - Used on PA-24-250 airplanes only.
Z - Used on PA-24-400 airplanes only.

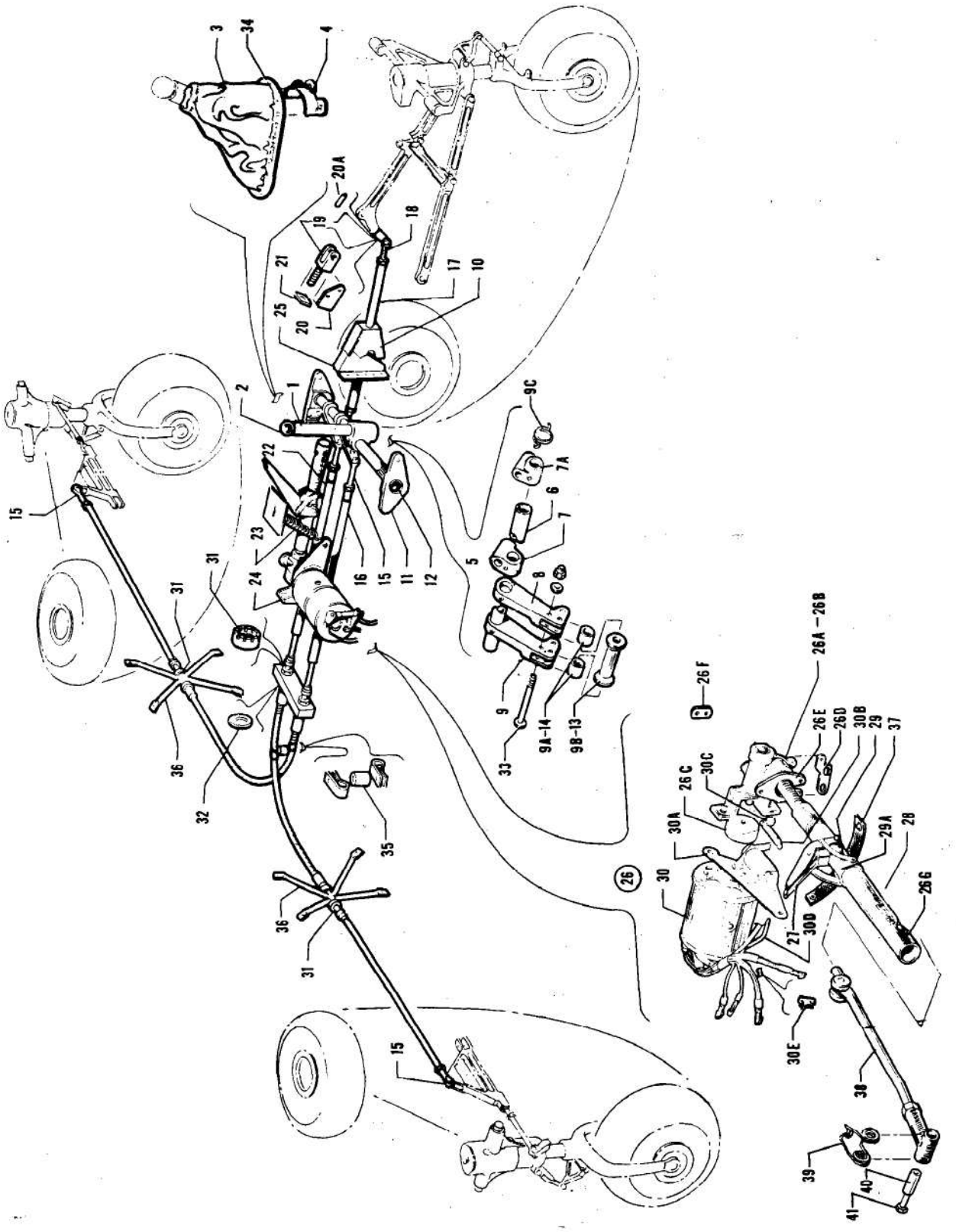

Figure 17. Landing Gear Retraction System

Figure and Index Number	Part Number	Code	NOMENCLATURE	No. Req.	SERIAL NUMBERS AFFECTED
17-	21155	A	DRAWING - Landing Gear Retraction System		
	23636	V	DRAWING - Landing Gear Retraction System		24-4783, 24-4804 and up
-1	21036-00	A	LEVER ASSEMBLY - Gear retraction	1	
	23919-00	V	LEVER ASSEMBLY - Gear retraction	1	24-4783, 24-4804 and up
-2	471 056		KNOB - Red (#25-A)	1	
-3	21280-00	A	BOOT - Gear retraction lever	1	
-4	21279-00	A	PLATE - Gear retraction lever former	1	
-5	21032-00	A	TUBE ASSEMBLY - Gear retraction torque	1	
	23982-00	V	TUBE ASSEMBLY - Gear retraction torque	1	24-4783, 24-4804 and up
-6	21032-02	A	TUBE - Gear retraction torque	1	
	23982-02	V	TUBE - Gear retraction torque	1	24-4783, 24-4804 and up
-7	21013-00	A	SOCKET - Gear retraction lever	1	
	21013-02	V	SOCKET - Gear retraction lever, outboard	1	24-4783, 24-4804 and up
-7a	23973-00	V	SOCKET - Gear retraction lever, inboard	1	24-4783, 24-4804 and up
-8	21012-03		ARM - Gear retraction tube, inboard	1	
-9	21012-02	XY	ARM - Gear retraction tube, outboard	1	
	25137-00	VZ	ARM - Gear retraction tube, outboard	1	
-9a	21087-00	V	SPACER - Gear retraction torque tube	1	24-4783, 24-4804 and up
-9b	14843-88	V	BUSHING - Gear retraction torque tube	1	24-4783, 24-4804 and up
-9c	23970-00	V	SPRING - Landing gear retraction lever	1	24-4783, 24-4804 and up
-10	21245-00	XY	SEAL ASSEMBLY - Nose gear retraction rod	1	24-1 to 24-2843 inclusive
	21245-05		SEAL ASSEMBLY - Nose gear retraction rod	1	24-2844 and up, 26-2 and up
-11	21041-00		BRACKET ASSEMBLY - Gear retracting tube	2	
-12	452 373		BEARING - (#M-1681)	1	
-13	21087-00	A	SPACER - Gear retraction torque tube	1	
-14	14843-88	A	BUSHING - Gear retraction torque tube	2	
-15	452 377		BEARING - Rod end (#HF-6M)	4	
-16	14843-79		BUSHING - Spacer, rod end	2	
-17	21109-00		ROD ASSEMBLY - Nose gear push pull	1	
-18	452 356	XY	BEARING - Rod end (#HMX-4M)	2	24-1 to 24-3530 inclusive
	452 412		BEARING - Rod end (#HMX-4S)	2	24-3531 and up, 26-2 and up
-19	20859-03	BXY	CLEVIS - Nose gear drag link	1	24-1 to 24-3225 inclusive
	23103-00		CLEVIS - Nose gear drag link	1	24-3226 and up, 26-2 and up
-20	21120-00	CXY	RETAINER - Nose gear drag link shim	1	24-1 to 24-3225 inclusive
	25257-00	D	REINFORCEMENT - Nose gear drag link	1	
-20a	480 705		PIN - Roll (#59-028-125-0500)	1	24-3226 and up, 26-2 and up

A - Used on PA-24-180 and PA-24-250 with serial numbers 24-1 and up, PA-24-260 with serial numbers 24-3642, 24-4000 to 24-4782 inclusive, 24-4784 to 24-4803 inclusive, and PA-24-400 with serial numbers 26-2 and up.
B - Order Part No. 23103-00 if Kit 754 429 has been installed.
C - Order Part No. 25257-00 if Kit 756 911 has been installed.
D - Used on PA-24-180 and PA-24-250 with serial numbers 24-1 to 24-3225 inclusive if Kit 756 911 has been installed.
V - Used on PA-24-260 airplanes only.
X - Used on PA-24-180 airplanes only.
Y - Used on PA-24-250 airplanes only.
Z - Used on PA-24-400 airplanes only.

Figure and Index Number	Part Number	Code	NOMENCLATURE	No. Req.	SERIAL NUMBERS AFFECTED
17-21	20860-05	XY	SHIM - Nose gear drag link .125	AR	24-1 to 24-3225 inclusive
	23115-00		SHIM - Nose gear drag link .032	AR	24-3226 and up, 26-2 and up
	20860-04		SHIM - Nose gear drag link .064	AR	
	20860-03		SHIM - Nose gear drag link .032	AR	
	20860-02		SHIM - Nose gear drag link .016	AR	
-22	455 180		CONDUIT - (#40303-1)	2	
-23	83302-39	XY	SPRING - Coil	1	24-1 to 24-3557 inclusive
	83302-31		SPRING - Coil	1	24-3558 and up, 26-2 and up
-24	21760-00		LUG - Gear retraction motor attachment	1	
-25	21244-00		PLATE ASSEMBLY - Nose gear retraction rod	1	
-26	25720-00		TRANSMISSION ASSEMBLY - Landing gear retraction	1	
-26a	25720-03		TRANSMISSION ASSEMBLY - (Less motor)	1	
-26b	25720-02		TRANSMISSION ASSEMBLY - (Less motor and release arm)	1	
-26c	757 833		COUPLING - Transmission gear retraction	1	
-26d	25719-00		LINK - Transmission retainer spring	1	
-26e	21854-00	A	PLATE - Transmission retainer bearings	1	
-26f	81262-95	A	LINK - Transmission retainer bearing plate support	1	
-26g	21855-00		ARM ASSEMBLY - Gear retraction motor release	1	
-27	21083-03		ARM - Motor release	1	
-28	21704-00		TUBE - Gear retraction motor release	1	
-29	21080-00		LINK - Release arm connector	2	
-29a	21038-07		BUSHING - Motor release tube	1	
-30	21286-00		MOTOR ASSEMBLY - Landing gear transmission retraction	1	
-30a	21403-00	XY	BRAKE AND ARM ASSEMBLY - (Complete)	1	24-1 to 24-3081 inclusive
	23042-00	XYZ	BRAKE AND ARM ASSEMBLY - (Complete)	1	24-3082 and up, 26-2 and up
	23042-00	V	BRAKE AND ARM ASSEMBLY - (Complete)	1	24-3642, 24-4000 to 24-4062 incl.
	24948-00	V	BRAKE AND ARM ASSEMBLY - (Complete)	1	24-4063 and up
-30b	83302-42	XYZ	SPRING ASSEMBLY - Landing gear transmission brake	1	
	83302-42	V	SPRING ASSEMBLY - Landing gear transmission brake	1	24-3642, 24-4000 to 24-4062 incl.
-30c	21415-00	XYZ	LINK ASSEMBLY - Landing gear transmission brake	1	
	21415-00	V	LINK ASSEMBLY - Landing gear transmission brake	1	24-3642, 24-4000 to 24-4062 incl.
-30d	21418-00		ROD ASSEMBLY - Landing gear transmission brake	1	
-30e	81262-82		LINK - Landing gear transmission brake rod	1	

A - Used if Dura Transmission is installed. Identified by Part No. 1010250 stamped on transmission housing.
V - Used on PA-24-260 airplanes only.
X - Used on PA-24-180 airplanes only.
Y - Used on PA-24-250 airplanes only.
Z - Used on PA-24-400 airplanes only.

Figure and Index Number	Part Number	Code	NOMENCLATURE	No. Req.	SERIAL NUMBERS AFFECTED
17-31	21063-00		NUT - Retraction push-pull cable	8	
-32	85012-100		WASHER	2	
-33	400 939		BOLT - (AN24-60A)	1	
	407 565		WASHER - (AN960-416)	1	
	404 836		NUT - (MS20364-428C)	1	
-34	21207-00	A	PLATE - Gear retraction boot seal	1	
-35	14843-62		BUSHING	1	
-36	21033-00		BRACKET ASSEMBLY - Landing gear control support	2	
-37	21836-00	XY	STRAP - Gear motor release arm hold down	1	24-1 to 24-696 inclusive
-38	26542-00	V	LOCK ASSEMBLY - Landing gear safety lock	1	24-4783, 24-4804 and up
-39	26522-00	V	SPRING - Landing gear safety lock	1	24-4783, 24-4804 and up
-40	29999-02	V	BUSHING - Landing gear safety lock	1	24-4783, 24-4804 and up
-41	26529-00	V	BOLT - Landing gear safety lock	1	24-4783, 24-4804 and up

A - Used on PA-24-180 and PA-24-250 with serial numbers 24-1 and up, PA-24-260 with serial numbers 24-3642, 24-4000 to 24-4782 inclusive, 24-4784 to 24-4803 inclusive, and PA-24-400 with serial numbers 26-2 and up.
V - Used on PA-24-260 airplanes only.
X - Used on PA-24-180 airplanes only.
Y - Used on PA-24-250 airplanes only.

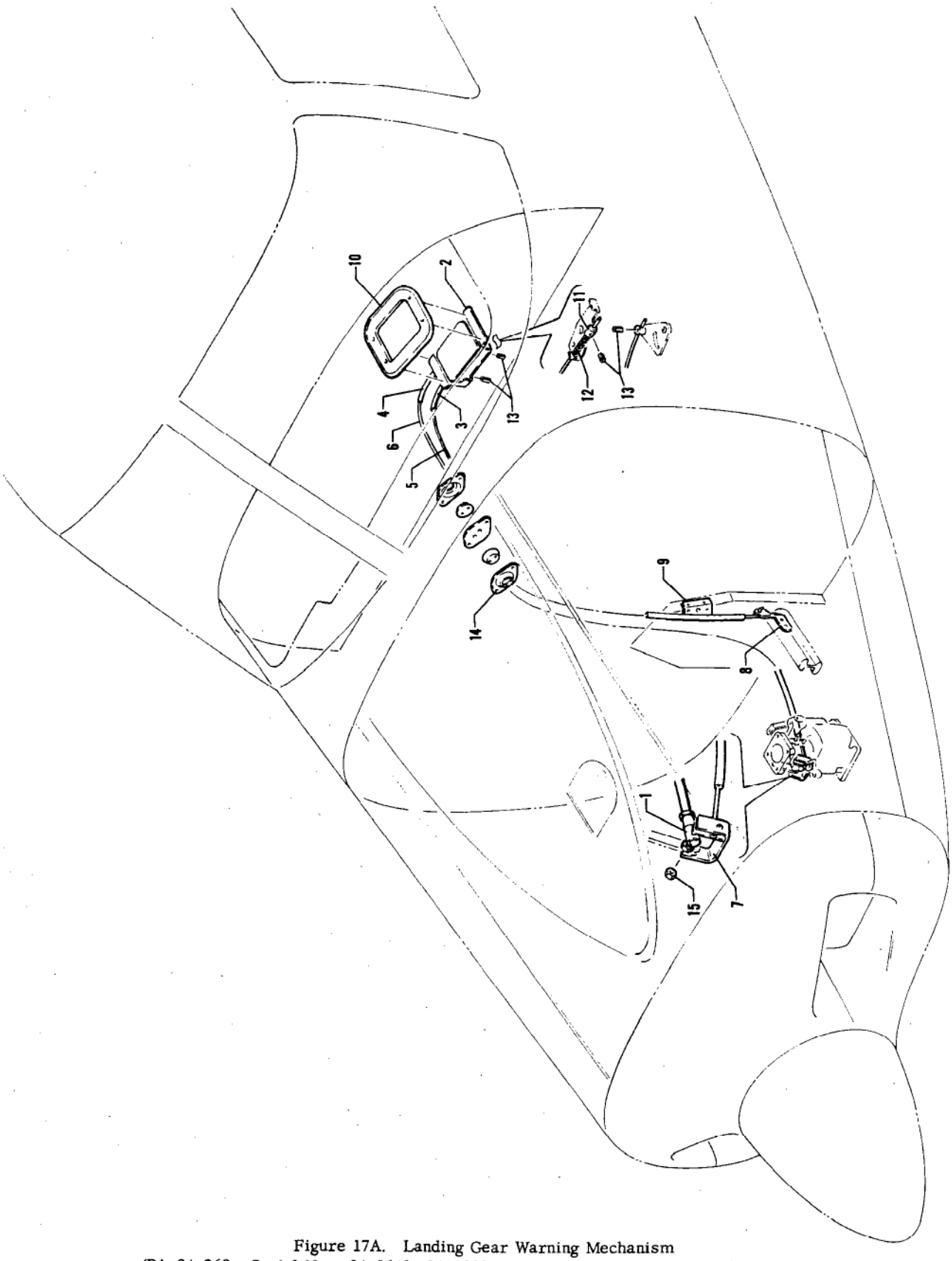

Figure 17A. Landing Gear Warning Mechanism
(PA-24-260 - Serial Nos. 24-3642, 24-4000 to 24-4782, 24-4784 to 24-4803 inclusive)
(PA-24-400 - Serial Nos. 26-2 and up)

Figure and Index Number	Part Number	Code	NOMENCLATURE	No. Req.	SERIAL NUMBERS AFFECTED
17A-	24832		DRAWING - Gear Warning Mechanism Installation		
-1	31747-00	V	JOINT ASSEMBLY - Throttle control	1	
-2	24742-00		MECHANISM ASSEMBLY - Landing gear warning	1	
-3	22472-14		HOUSING - Warning control wire, 44-3/4" L	1	
-4	22472-16		HOUSING - Warning control wire, 61-1/2" L	1	
-5	22470-11		WIRE - Warning control	1	
-6	24830-00		CABLE ASSEMBLY - Warning control	1	
-7	24781-00		CLAMP ASSEMBLY - Warning cable release	1	
-8	24778-00		LINK - Cable attachment	1	
-9	24779-00		BRACKET - Cable clamp attachment	1	
-10	24763-00		PLATE - Gear warning placard trim	1	
-11	24780-00		STUD - Control cable attachment	1	
-12	83302-60		SPRING - Control cable	1	
-13	419 955		SCREW - Set (#4-40 x 1/8 L)	4	
-14	22103-02		PLATE - Firewall seal	2	
	22104-11		GROMMET - Firewall seal	2	
	22105-04		GASKET - Firewall seal	1	
-15	404 835	V	NUT - (MS20364-1032C)	1	

A - Used on PA-24-260 with serial numbers 24-3642, 24-4000 to 24-4782 inclusive, 24-4784 to 24-4803 inclusive, and PA-24-400 with serial numbers 26-2 and up.
V - Used on PA-24-260 airplanes only.

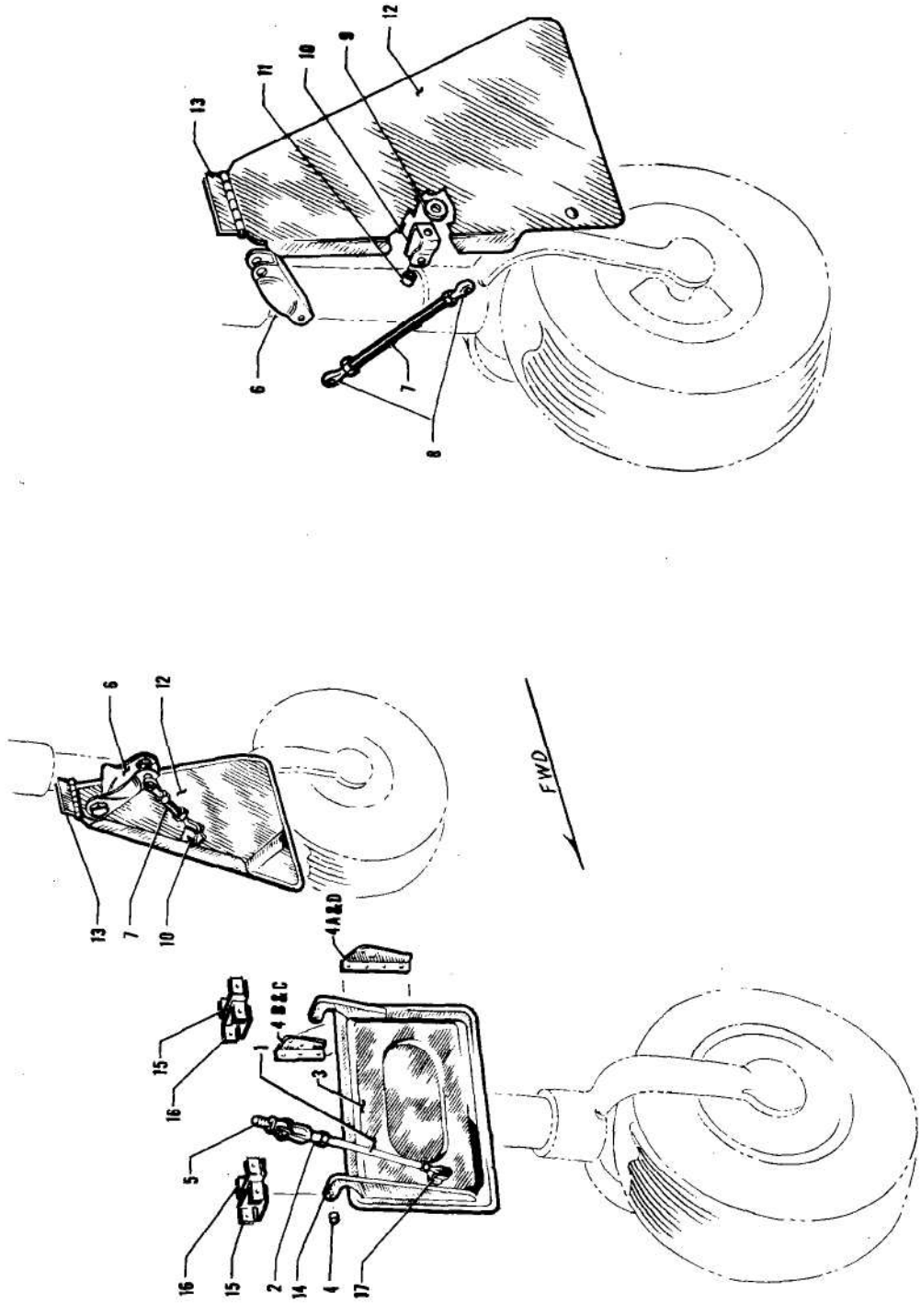

Figure 18. Landing Gear Door Installation
(PA-24-180 and PA-24-250 - Serial Nos. 24-1 and up)
(PA-24-260 - Serial Nos. 24-3642, 24-4000 to 24-4782, 24-4784 to 24-4803 inclusive)

Figure and Index Number	Part Number	Code	NOMENCLATURE	No. Req.	SERIAL NUMBERS AFFECTED
18-	21111		DRAWING - Landing Gear Doors Installation		
-1	21118-03		ROD ASSEMBLY - Nose gear front door retraction	1	
-2	454 901		CLEVIS - (AN486-4)	2	
-3	21112-00		DOOR ASSEMBLY - Nose gear front	1	
-4	80012-97		BUSHING - Nose gear front door hinge	2	
-4a	21319-02		BRACKET - Nose gear door hinge, front	1	
-4b	21319-03		BRACKET - Nose gear door hinge, front	1	
-4c	21319-04		BRACKET - Nose gear door hinge, rear	1	
-4d	21319-05		BRACKET - Nose gear door hinge, rear	1	
-5	402 032		BOLT - Eye (AN42B-5)	1	
-6	21068-00	XY	BRACKET ASSEMBLY - Main gear door left retraction	1	
	21068-01	XY	BRACKET ASSEMBLY - Main gear door right retraction	1	
	24842-00	V	BRACKET ASSEMBLY - Main gear door left retraction	1	
	24842-01	V	BRACKET ASSEMBLY - Main gear door right retraction	1	
-7	21067-03		ROD ASSEMBLY - Main gear door actuating	2	
-8	452 383		BEARING - Rod end (24166-00)	2	
-9	80122-10		WASHER	2	
-10	21066-00		HORN ASSEMBLY - Main gear door retraction	2	
-11	14976-09		BUSHING	2	
-12	22984-00		DOOR ASSEMBLY - Main gear, left	1	
	22984-01		DOOR ASSEMBLY - Main gear, right	1	
-13	21065-12	B	HINGE - Landing gear door	1	
-14	21318-00		HINGE - Nose wheel door	2	
-15	21322-02	XY	BRACKET ASSEMBLY - Nose wheel door hinge, front	1	
	21322-03	XY	BRACKET ASSEMBLY - Nose wheel door hinge, rear	1	
	21322-06	V	BRACKET ASSEMBLY - Nose wheel door hinge, front	1	
	21322-07	V	BRACKET ASSEMBLY - Nose wheel door hinge, rear	1	
-16	21320-02	XY	BRACKET ASSEMBLY - Nose wheel door hinge, front	1	
	21320-03	XY	BRACKET ASSEMBLY - Nose wheel door hinge, rear	1	
	21320-06	V	BRACKET ASSEMBLY - Nose wheel door hinge, front	1	
	21320-07	V	BRACKET ASSEMBLY - Nose wheel door hinge, rear	1	
-17	21317-00		HORN ASSEMBLY - Nose gear door retraction	1	

A - Used on PA-24-180 and PA-24-250 with serial numbers 24-1 and up, PA-24-260 with serial numbers 24-3642, 24-4000 to 24-4782 inclusive, 24-4784 to 24-4803 inclusive.
B - This material can be ordered in 6' lengths by ordering Part No. 189 334.
V - Used on PA-24-260 airplanes only.
X - Used on PA-24-180 airplanes only.
Y - Used on PA-24-250 airplanes only.

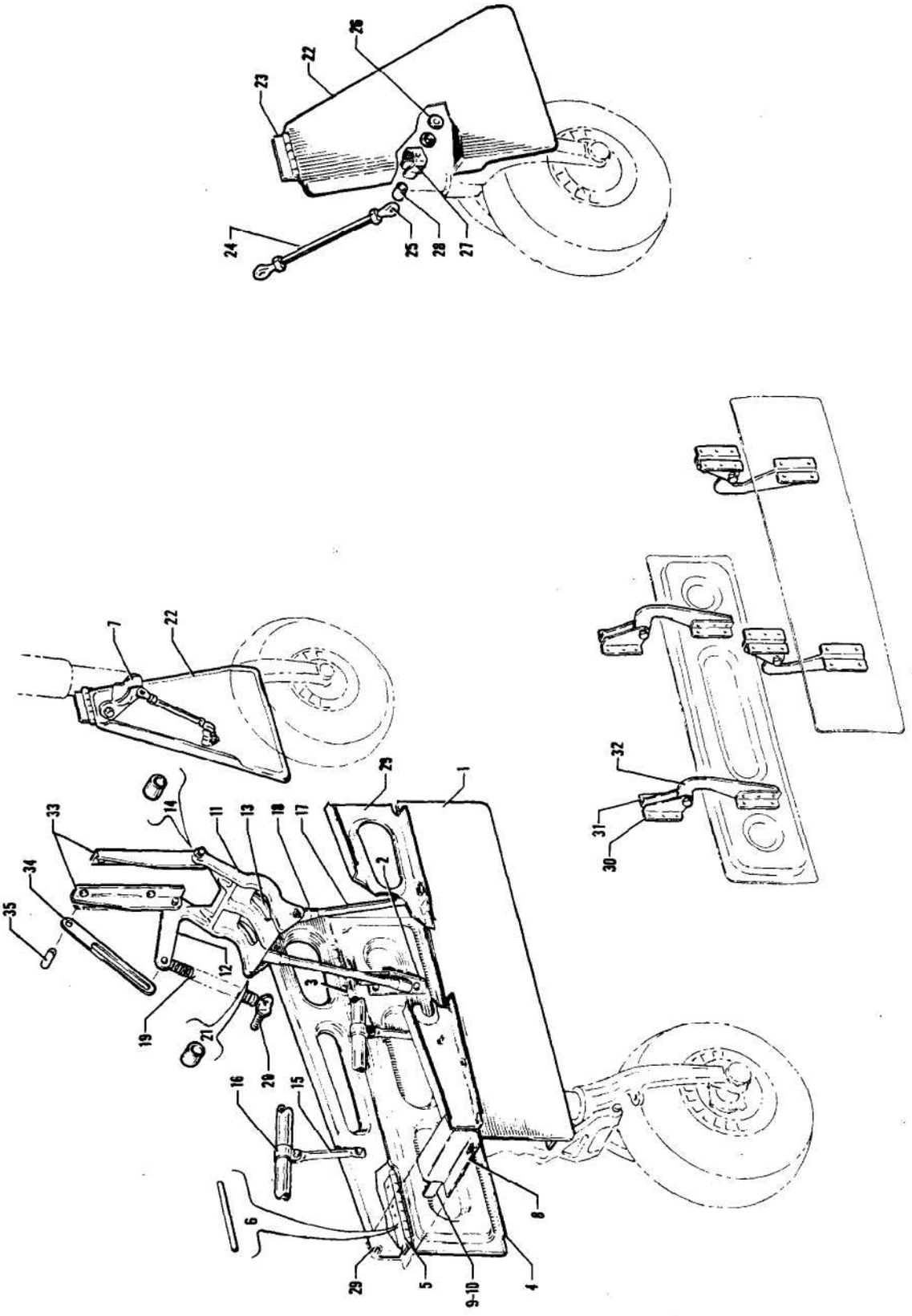

Figure 18A. Landing Gear Doors Installation
(PA-24-260 - Serial Nos. 24-4783, 24-4804 and up)
(PA-24-400 - Serial Nos. 26-2 and up)

Figure and Index Number	Part Number	Code	NOMENCLATURE	No. Req.	SERIAL NUMBERS AFFECTED
18A-	22916	Z	DRAWING - Landing Gear Doors Installation		
	26158	V	DRAWING - Landing Gear Doors Installation		
-1	24444-00	Z	DOOR ASSEMBLY - Nose gear, left	1	
	26208-00	V	DOOR ASSEMBLY - Nose gear, left	1	
	24444-01	Z	DOOR ASSEMBLY - Nose gear, right	1	
	26208-01	V	DOOR ASSEMBLY - Nose gear, right	1	
-2	24483-00	Z	BRACKET ASSEMBLY - Nose gear door, left	1	
	24483-01	Z	BRACKET ASSEMBLY - Nose gear door, right	1	
-3	24444-06	AZ	HINGE HALF - Rear, left	1	
	24444-07	AZ	HINGE HALF - Rear, right	1	
-4	24444-08	AZ	HINGE HALF - Nose gear door	2	
-5	24444-09	AZ	HINGE HALF - Front	1	
-6	86092-84	Z	PIN - Nose gear door hinge	2	
-7	24819-00		BRACKET ASSEMBLY - Main gear door retraction, left	1	
	24819-01		BRACKET ASSEMBLY - Main gear door retraction, right	1	
-8	24440-00	Z	CHANNEL ASSEMBLY - Nose gear door	1	
	26192-00	V	CHANNEL ASSEMBLY - Nose gear door	1	
-9	24509-00	V	ANGLE - Nose gear door stop	1	
-10	24509-00	Z	ANGLE - Nose gear door stop	1	
-11	24561-00		BRACKET ASSEMBLY - Nose gear door actuator	1	
-12	24571-00		BRACKET - Nose gear door actuator	1	
-13	24562-00		PLATE - Nose gear door actuator	1	
-14	80012-57		BUSHING - Nose gear door actuator	1	
-15	24441-00	Z	TUBE - Nose gear door bulkhead support	2	
	26280-00	V	STRAP - Nose gear door bulkhead support	2	
-16	80002-80	Z	CLAMP - Bulkhead support tube	2	
	80002-27	V	CLAMP - Bulkhead support strap	2	
-17	24482-00		ROD ASSEMBLY - Nose gear door	2	
-18	469 138		BALL JOINT - (#R-107)	1	
-19	24521-00		SPRING - Nose gear door return	1	
-20	402 032		BOLT - Eye (AN42B-5) return spring	1	
-21	14175-101		BUSHING	2	
-22	22984-00		DOOR ASSEMBLY - Main gear, left	1	
	22984-01		DOOR ASSEMBLY - Main gear, right	1	
-23	21065-12	B	HINGE - Main gear door	1	
-24	21067-03		ROD ASSEMBLY - Main gear door retraction	2	
-25	452 383		BEARING - Rod end (24166-00)	2	
-26	80122-10		WASHER	2	
-27	21066-00		HORN ASSEMBLY - Main gear door retraction	2	
-28	14976-09		BUSHING	2	
-29	23152-00	Z	BULKHEAD ASSEMBLY - Nose gear door, left	1	
	26196-00	V	BULKHEAD ASSEMBLY - Nose gear door, left	1	
	23152-01	Z	BULKHEAD ASSEMBLY - Nose gear door, right	1	
	26196-01	V	BULKHEAD ASSEMBLY - Nose gear door, right	1	

A - This material can be ordered in 6' lengths by ordering part number 189 350.
B - This material can be ordered in 6' lengths by ordering part number 189 334.
V - Used on PA-24-260 airplanes only.
Z - Used on PA-24-400 airplanes only.

When ordering, always specify Part Number, Description and Serial Number of Aircraft

Figure and Index Number	Part Number	Code	NOMENCLATURE	No. Req.	SERIAL NUMBERS AFFECTED
18A-30	23874-00	V	BRACKET ASSEMBLY - Nose wheel fairing hinge, left	2	
	23874-01	V	BRACKET ASSEMBLY - Nose wheel fairing hinge, right	2	
-31	23875-00	V	BRACKET ASSEMBLY - Nose wheel fairing hinge, left	2	
	23875-01	V	BRACKET ASSEMBLY - Nose wheel fairing hinge, right	2	
-32	26198-00	V	HINGE ASSEMBLY - Nose gear cover	4	
-33	24445-00		BRACKET - Nose gear door actuator, left	1	
	24445-01	Z	BRACKET - Nose gear door actuator, right	1	
	26279-00	V	BRACKET - Nose gear door actuator, right	1	
-34	26278-00	V	LINK - Nose gear door stop	1	
-35	42129-19	V	BUSHING	1	

V - Used on PA-24-260 airplanes only.
Z - Used on PA-24-400 airplanes only.

When ordering, always specify Part Number, Description and Serial Number of Aircraft

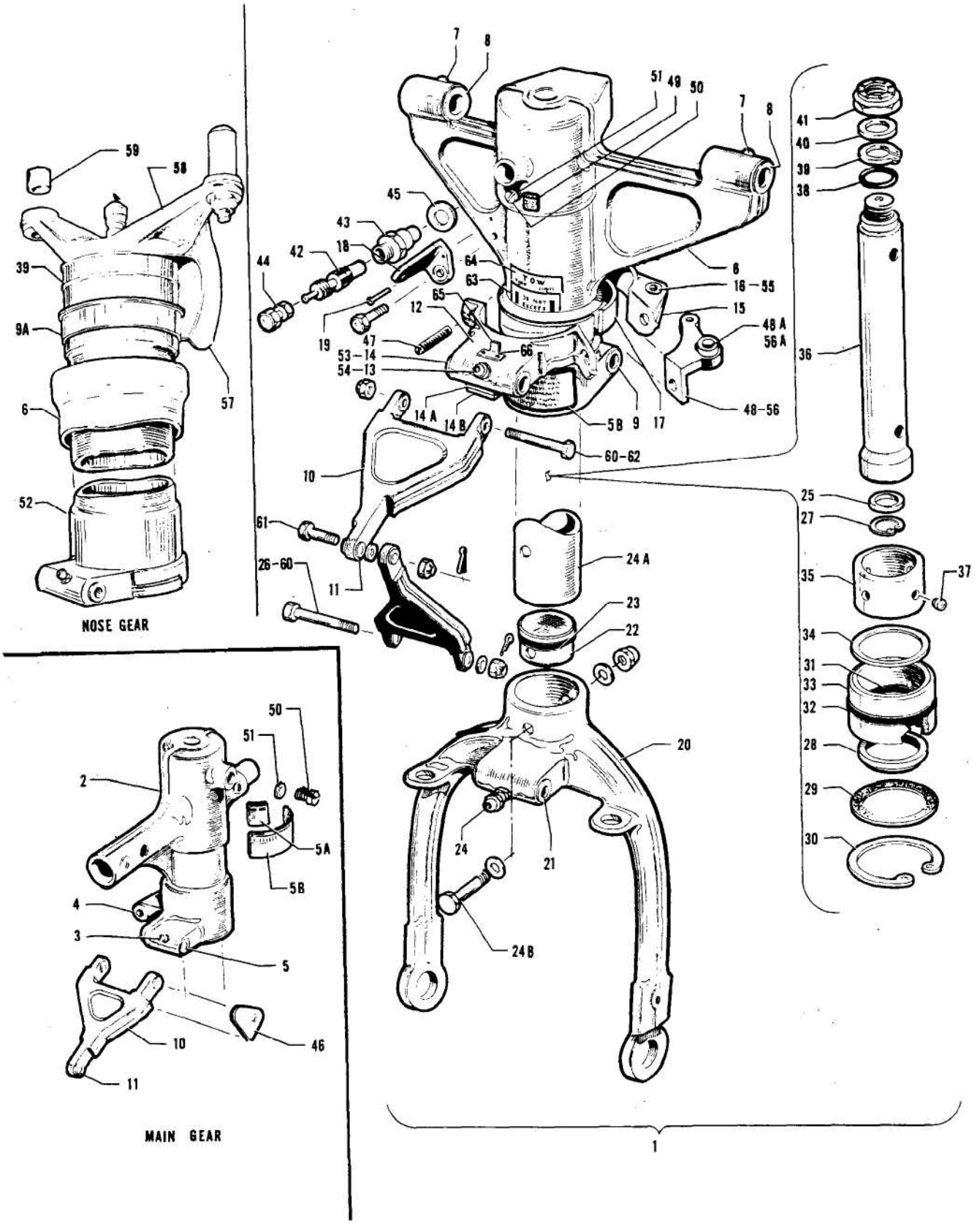

Figure 19. Landing Gear Strut Assemblies "180" & "250"

Figure and Index Number	Part Number	Code	NOMENCLATURE	No. Req.	SERIAL NUMBERS AFFECTED
19-	20798		DRAWING - Main Landing Gear Strut		
	20806	A	DRAWING - Nose Landing Gear Strut		
	21716	B	DRAWING - Nose Landing Gear Strut		
-1	20798-04	J	STRUT ASSEMBLY - Main gear, left	1	
	20798-06	F	STRUT ASSEMBLY - Main gear, left	1	
	20798-05	J	STRUT ASSEMBLY - Main gear, right	1	
	20798-07	F	STRUT ASSEMBLY - Main gear, right	1	
	21716-00	CH	STRUT ASSEMBLY - Nose gear	1	
-2	20752-12	J	HOUSING ASSEMBLY - Main gear strut, left	1	
	27053-04	F	HOUSING ASSEMBLY - Main gear strut, left	1	
	20752-13	J	HOUSING ASSEMBLY - Main gear strut, right	1	
	27053-05	F	HOUSING ASSEMBLY - Main gear strut, right	1	
-3	460 690	D	FITTING - Lubricator (AN944-201A)	1	
-4	20737-03	D	BUSHING - Main gear strut	1	
-5	20737-02	D	BUSHING - Main gear strut	2	
-5a	21588-00		PLACARD - Oil level (481 003)	1	
-5b	27260-02		PLACARD - Strut oleo service	1	
-6	21716-02	CEG	HOUSING ASSEMBLY - Nose gear strut	1	24-1 to 24-214 inclusive
	21715-00	BE	HOUSING ASSEMBLY - Nose gear strut	1	24-215 and up
-7	460 691	E	FITTING - Lubricator (AN944-101)	3	
-8	20777-00	E	BUSHING - Nose gear strut	2	
-9	20737-04	E	BUSHING - Nose gear strut	2	
-9a	21706-00	BE	BUSHING	2	24-215 and up
-10	20735-03	D	LINK ASSEMBLY - Main gear torque	2	
	20770-00	AE	LINK ASSEMBLY - Nose gear torque	2	24-1 to 24-214 inclusive
	20735-03	BE	LINK ASSEMBLY - Nose gear torque	2	24-215 and up
-11	452 366		BEARING - Oilite (#F-310-5)	1	

A - Used only when strut assembly serial numbers 1 to 637 is installed.
B - Used only when nose strut serial numbers 638 and up is installed.
C - When ordering replacement for strut serial numbers 1 to 637, also order Kit 754 195.
D - Used on main gear strut only.
E - Used on nose gear strut only.
F - Used if Piper Part No. 27016 (Left Strut) or 27016-1 (Right Strut) is forged on Landing Gear Strut Housing.
G - Used only when strut assembly serial numbers 1 to 637 is installed. If Kit 754 229 is installed, order Part No. 21715-00.
H - Order nose gear strut 21716-05 if shimmy dampener incorporates a self-aligning end bearing.
J - Used if Piper Part No. 20750-4 (Left Strut) or 20750-5 (Right Strut) is forged on Landing Gear Strut Housing.

When ordering, always specify Part Number, Description and Serial Number of Aircraft

Figure and Index Number	Part Number	Code	NOMENCLATURE	No. Req.	SERIAL NUMBERS AFFECTED
19-12	20833-02	BCD	COLLAR ASSEMBLY - Nose gear front	1	24-1 to 24-48 inclusive
	20833-06	BD	COLLAR ASSEMBLY - Nose gear front	1	24-49 to 24-214 inclusive
-13	460 690	B	FITTING - Lubricator (AN944-201A)	1	
-14	20737-02	B	BUSHING - Nose gear front collar	2	
-14a	21485-00	B	PLATE - Spacer	1	24-1 to 24-48 inclusive
-14b	21486-00	B	BLOCK - Spacer	1	24-1 to 24-48 inclusive
-15	20833-04	BD	COLLAR ASSEMBLY - Nose gear, rear	1	24-1 to 24-214 inclusive
-16	14843-27	B	BUSHING - Nose gear rear collar	1	
-17	21489-00	BD	LINING - Friction	2	24-1 to 24-214 inclusive
-18	21324-00	B	BRACKET	1	
-19	480 695	BD	PIN - Roll (#59-022-094-1250)	1	24-1 to 24-214 inclusive
	480 700	BE	PIN - Roll (#59-022-094-0375)	2	24-215 and up
-20	20790-00		FORK ASSEMBLY - Landing gear	1	
-21	20737-02		BUSHING - Landing gear fork	2	
-22	20787-00		PLUG - Landing gear fork	1	
-23	484 711		PACKING - "O" Ring (AN6227-23)	1	
-24	460 690		FITTING - Lubricator (AN944-201A)	1	
-24a	20789-00		TUBE - Landing gear strut piston	1	
-24b	402 325		BOLT - (AN174-27A)	1	
	404 888		NUT - (MS20365-428C)	1	
	407 585		WASHER - (AN960-416L)	2	
-25	20782-00		PLATE - Landing gear strut orifice	1	
-26	402 344	A	BOLT - (AN175-32) Torque link assembly	1	
	407 586	A	WASHER - (AN960-516L) Torque link assembly	2	
	404 102	A	NUT - (AN310-5) Torque link assembly	1	
	424 052	A	PIN - Cotter (MS24665-134) Torque link assembly	1	
-27	484 717		RING - Snap (#5000-118)	1	
-28	187 625	F	STRIP - Wiper (#10V70) (5-1/2" L)		
-29	80122-88		WASHER	1	
-30	484 718		RING - Snap (#5000-250)	1	
-31	484 713		PACKING - "O" Ring (AN6227-30)	1	
-32	462 034		PACKING - "O" Ring (AN6230-5)	1	
-33	20786-00	D	BEARING - Landing gear strut tube, nose	1	24-1 to 24-214 inclusive
	20786-02	E	BEARING - Landing gear strut tube	1	24-215 and up
-34	21050-00	BD	WASHER - Oleo bearing	1	24-1 to 24-214 inclusive
-35	20785-00		BEARING - Landing gear strut tube upper	1	
-36	20754-00	A	TUBE - Landing gear strut orifice	1	24-1 and up
	20754-00	BD	TUBE - Landing gear strut orifice	1	24-1 to 24-214 inclusive
	21712-00	BE	TUBE - Landing gear strut orifice	1	24-215 and up
-37	20784-00		PIN - Bearing retainer	2	
-38	484 712		PACKING - "O" Ring (AN6227-15) (752 713)	1	

A - Used on main gear strut only.
B - Used on nose gear strut only.
C - Order 20833-06 if nose gear strut with 40° turning radius is installed.
D - Used only when strut assembly serial numbers 1 to 637 is installed.
E - Used only when nose strut serial numbers 638 and up is installed.
F - Sold by the foot length.

When ordering, always specify Part Number, Description and Serial Number of Aircraft

Figure and Index Number	Part Number	Code	NOMENCLATURE	No. Req.	SERIAL NUMBERS AFFECTED
19-39	484 714	A	RING - Back up (MS28782-15)	1	24-1 and up
	484 714	BC	RING - Back up (MS28782-15)	1	24-1 to 24-214 inclusive
	484 723	BD	RING - Snap (#5100-268)	1	24-215 and up
-40	80122-89	A	WASHER	1	24-1 and up
	80122-89	BC	WASHER	1	24-1 to 24-214 inclusive
	21710-00	BD	WASHER	1	24-215 and up
-41	752 483	A	NUT - (AN364-1216)	1	24-1 and up
	752 483	BC	NUT - (AN364-1216)	1	24-1 to 24-214 inclusive
	404 840	BD	NUT - (AN364-1414)	1	24-215 and up
-42	455 124		CORE - Air valve (AN809-1)	1	
-43	453 124		BODY - Air valve (AN812-1)	1	
-44	751 502		CAP - Air valve (AN813-1B)	1	
-45	751 834		GASKET - Air valve (AN901-5A)	1	
-46	21215-00	A	BRACKET - Gear switch actuating rod, left	1	
-47	21446-00	BC	STUD - Nose gear collar	1	24-1 to 24-214 inclusive
-48	21490-00	BC	BRACKET ASSEMBLY - Shimmy dampener support	1	24-1 to 24-214 inclusive
-48a	21487-00	BC	BUSHING - Shimmy dampener support bracket	1	24-1 to 24-214 inclusive
-49	21588-00	BC	PLACARD - Oil level	1	24-103 to 24-214 inclusive
-50	21587-00	A	BOLT - Oleo bleeder hole	1	24-103 and up
	21587-00	BC	BOLT - Oleo bleeder hole	1	24-103 to 24-214 inclusive
-51	753 172	A	WASHER - Oleo bleeder bolt (21586-00)	1	24-103 and up
	753 172	BC	WASHER - Oleo bleeder bolt (21586-00)	1	24-103 to 24-214 inclusive
-52	21707-00	BD	TUBE ASSEMBLY - Nose gear strut, upper	1	24-215 and up
-53	20737-02	BD	BUSHING	2	24-215 and up
-54	460 691	BD	FITTING - Lubricator (AN944-101)	1	24-215 and up
-55	21831-04	BD	BEARING - (F248A)	1	24-215 and up
-56	21709-00	BDE	BRACKET ASSEMBLY - Shimmy dampener attachment	1	24-215 and up
-56a	21831-03	BD	BEARING - Shimmy dampener bracket	1	24-215 and up
-57	21719-05	BD	BRACKET ASSEMBLY	1	24-215 and up
-58	21714-00	BD	ARM ASSEMBLY - Nose wheel steering	1	24-215 and up
-59	14976-11	BD	BUSHING	2	24-215 and up
-60	402 344	B	BOLT - (AN175-32) Torque link assembly	2	
	404 102	B	NUT - (AN310-5) Torque link assembly	2	
	424 052	B	PIN - (MS24665-134) Torque link assembly	2	
	407 586	B	WASHER - (AN960-516L) Torque link assembly	4	
-61	402 313		BOLT - (AN174-13) Torque link assembly joint	1	
	404 101		NUT - (AN310-4) Torque link assembly joint	1	
	424 052		PIN - (MS24665-134) Torque link assembly joint	1	
	407 565		WASHER - (AN960-416) Torque link assembly joint	2	
	407 585		WASHER - (AN960-416L) Torque link assembly joint, center	1	

A - Used on main gear strut only.
B - Used on nose gear strut only.
C - Used when strut assembly serial numbers 1 to 637 is installed.
D - Used when nose strut serial numbers 638 and up is installed.
E - Order bracket 25666-00 if shimmy dampener incorporates a self-aligning end bearing.

When ordering, always specify Part Number, Description and Serial Number of Aircraft

Figure and Index Number	Part Number	Code	NOMENCLATURE	No. Req.	SERIAL NUMBERS AFFECTED
19-62	402 343	A	BOLT - (AN175-34) Torque link assembly, left	1	
	402 345	A	BOLT - (AN175-33) Torque link assembly, right	1	
	407 586	A	WASHER - (AN960-516L) Torque link assembly	2	
	404 102	A	NUT - (AN310-5) Torque link assembly	1	
	424 052	A	PIN - Cotter (MS24665-134) Torque link assembly	1	
-63	27257-00	B	PLACARD - Do not exceed	1	
-64	27258-00	B	PLACARD - Tow turn limits	1	
-65	42740-00	B	INDICATOR - Tow turn	1	
-66	419 600	B	SCREW - (MS21318-15)	2	

A - Used on main gear strut only.
B - Used on nose gear strut only.

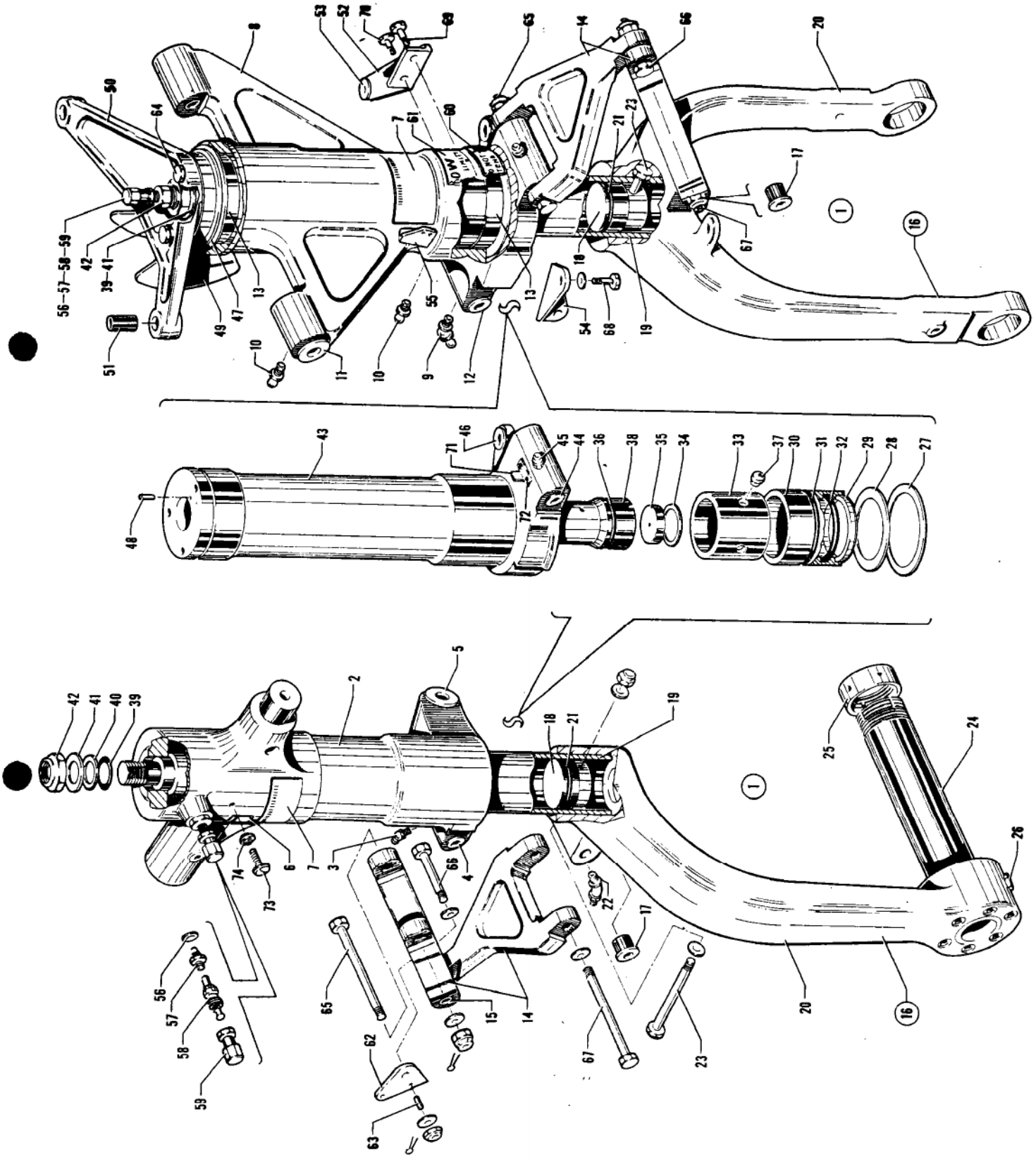

Figure 19A. Landing Gear Strut Assemblies "260" and "400"

Figure and Index Number	Part Number	Code	NOMENCLATURE	No. Req.	SERIAL NUMBERS AFFECTED
19A-	24681	Z	DRAWING - Main Landing Gear Strut Assembly		
	24810	V	DRAWING - Main Landing Gear Strut Assembly		
	22810	Z	DRAWING - Nose Landing Gear Strut Assembly		
	21716	V	DRAWING - Nose Landing Gear Strut Assembly		
-1	24681-00	BZ	STRUT ASSEMBLY - Main gear, left (complete)	1	
	27142-00	FZ	STRUT ASSEMBLY - Main gear, left (complete)	1	
	24810-00	BE	STRUT ASSEMBLY - Main gear, left (complete)	1	
	24810-02	BV	STRUT ASSEMBLY - Main gear, left (complete)	1	24-4783, 24-4804 to 24-5010 incl.
	27143-00	FV	STRUT ASSEMBLY - Main gear, left (complete)	1	24-3642, 24-4000 and up
	24681-01	BZ	STRUT ASSEMBLY - Main gear, right (complete)	1	
	24681-05	FZ	STRUT ASSEMBLY - Main gear, right (complete)	1	
	24810-01	BE	STRUT ASSEMBLY - Main gear, right (complete)	1	
	24810-03	BV	STRUT ASSEMBLY - Main gear, right (complete)	1	24-4783, 24-4804 to 24-5010 incl.
	27144-00	EV	STRUT ASSEMBLY - Main gear, right (complete)	1	24-3642, 24-4000 and up
	22810-00	CZ	STRUT ASSEMBLY - Nose gear (complete)	1	
	21716-00	DV	STRUT ASSEMBLY - Nose gear (complete)	1	24-3642, 24-4000 to 24-4570 incl.
	21716-04	V	STRUT ASSEMBLY - Nose gear (complete)	1	24-4571 to 24-4782 inclusive. 24-4784 to 24-4803 inclusive
	21716-05	V	STRUT ASSEMBLY - Nose gear (complete)	1	24-4783, 24-4804 and up
-2	20752-12	ABE	HOUSING ASSEMBLY - Main gear strut, left	1	
	27053-04	AEF	HOUSING ASSEMBLY - Main gear strut, left	1	
	27052-08	ABVZ	HOUSING ASSEMBLY - Main gear strut, left	1	24-4783, 24-4804 to 24-5010 incl., 26-2 and up
	27053-00	AF	HOUSING ASSEMBLY - Main gear strut, left	1	24-3642, 24-4000 and up
	20752-13	ABE	HOUSING ASSEMBLY - Main gear strut, right	1	
	27053-05	AEF	HOUSING ASSEMBLY - Main gear strut, right	1	
	20752-09	ABVZ	HOUSING ASSEMBLY - Main gear strut, right	1	24-4783, 24-4804 to 24-5010 incl., 26-2 and up
	27053-01	AF	HOUSING ASSEMBLY - Main gear strut, right	1	24-3642, 24-4000 and up
-3	460 690	A	FITTING - Lubricator (AN944-201A)	1	
-4	20737-02	A	BUSHING	2	
-5	20737-16	AVZ	BUSHING	1	24-4783, 24-4804 and up, 26-2 and up
-6	21588-00	A	PLACARD - Oil level (481 003)	1	
-7	27260-02		PLACARD - Strut oleo service	1	

A - Used on main gear strut only.
B - Used if Piper Part No. 20750-4 (Left Strut) or 20750-5 (Right Strut) is forged on Landing Gear Strut Housing.
C - Order nose gear strut 22810-03 if shimmy dampener incorporates a self-aligning end bearing.
D - Order nose gear strut 21716-05 if shimmy dampener incorporates a self-aligning end bearing.
E - Used on PA-24-260 with serial numbers 24-3642, 24-4000 to 24-4782 inclusive, 24-4784 to 24-4803 inclusive.
F - Used if Piper Part No. 27016 (Left Strut) or 27016-1 (Right Strut) is forged on Landing Gear Strut Housing.
V - Used on PA-24-260 airplanes only.
Z - Used on PA-24-400 airplanes only.

Figure and Index Number	Part Number	Code	NOMENCLATURE	No. Req.	SERIAL NUMBERS AFFECTED
19A-8	21715-04	BD	HOUSING ASSEMBLY - Nose gear strut	1	
	21715-06	BV	HOUSING ASSEMBLY - Nose gear strut	1	24-4783, 24-4804 and up
-9	460 690	BD	FITTING - Lubricator (AN944-201A)	1	
	460 691	BV	FITTING - Lubricator (AN944-101)	1	24-4783, 24-4804 and up
-10	460 691	B	FITTING - Lubricator (AN944-101)	3	
-11	31766-00	B	BUSHING	2	
-12	20737-04	B	BUSHING	2	
-13	21706-00	B	BUSHING	2	
-14	20735-03		LINK ASSEMBLY - Main and nose gear torque	2	
-15	452 366		BEARING - Oilite (F-310-5)	1	
-16	20790-02	BZ	FORK ASSEMBLY - Nose gear	1	
	20790-00	BV	FORK ASSEMBLY - Nose gear	1	
	24680-00	AZ	FORK ASSEMBLY - Main gear, left	1	
	24809-00	AV	FORK ASSEMBLY - Main gear, left	1	
	24680-01	AZ	FORK ASSEMBLY - Main gear, right	1	
	24809-01	AV	FORK ASSEMBLY - Main gear, right	1	
-17	20737-02		BUSHING - Main and nose gear fork	2	
-18	20787-00		PLUG - Main and nose gear fork	1	
-19	22785-00	Z	TUBE - Main and nose gear strut piston	1	
	20789-00	V	TUBE - Main and nose gear strut piston	1	
-20	20736-02	BZ	FORK - Nose gear	1	
	20736-00	BV	FORK - Nose gear	1	
	24679-00	AZ	FORK - Main gear, left	1	
	24679-02	AV	FORK - Main gear, left	1	
	24679-01	AZ	FORK - Main gear, right	1	
	24679-03	AV	FORK - Main gear, right	1	
-21	484 711		PACKING - "O" Ring (AN6227-23)	1	
-22	460 690		FITTING - Lubricator (AN944-201A)	1	
-23	402 325		BOLT - (AN174-37A)	1	
	407 585		WASHER - (AN960-416L)	2	
	404 888		NUT - (MS20365-428C)	1	
-24	24678-00	A	AXLE - Main gear	1	
-25	24677-00	A	NUT - Main gear axle	1	
-26	401 329	A	BOLT - (AN4-31A)	1	
	407 585	A	WASHER - (AN960-416L)	1	
	404 836	A	NUT - (MS20364-428C)	1	
-27	484 718		RING - Snap (#5000-250)	1	
-28	19513-39	Z	WASHER	1	
	80122-88	V	WASHER	1	
-29	187 625	C	STRIP - Wiper (#10V70) 5-7/8" L		
-30	22775-00	Z	BEARING - Landing gear strut tube, lower	1	
	20786-02	V	BEARING - Landing gear strut tube, lower	1	

A - Used on main gear strut only.
B - Used on nose gear strut only.
C - Sold by foot length.
D - Used on PA-24-260 with serial numbers 24-3642, 24-4000 to 24-4782 inclusive, 24-4784 to 24-4803 inclusive, and PA-24-400 with serial numbers 26-2 and up.
V - Used on PA-24-260 airplanes only.
Z - Used on PA-24-400 airplanes only.

When ordering, always specify Part Number, Description and Serial Number of Aircraft

Figure and Index Number	Part Number	Code	NOMENCLATURE	No. Req.	SERIAL NUMBERS AFFECTED
19A-31	462 034		GASKET - "O" Ring (AN6230-5)	1	
-32	484 734	Z	PACKING - "O" Ring (AN6227-31)	1	
	484 713	V	PACKING - "O" Ring (AN6227-30)	1	
-33	20785-02	Z	BEARING - Landing gear strut tube, upper	1	
	20785-00	V	BEARING - Landing gear strut tube, upper	1	
-34	484 717		RING - Snap (#5000-118)	1	
-35	20782-02	Z	PLATE - Landing gear strut orifice	1	
	20782-00	V	PLATE - Landing gear strut orifice	1	
-36	484 735	Z	RING - Standard perfect circle (#OM016)	1	
-37	20784-00		PIN - Bearing retainer	4	
-38	20754-02	AZ	TUBE - Main gear strut orifice	1	
	20754-00	AV	TUBE - Main gear strut orifice	1	
	21712-02	BZ	TUBE - Nose gear strut orifice	1	
	21712-00	BV	TUBE - Nose gear strut orifice	1	
-39	484 712		PACKING - "O" Ring (AN6227-15)	1	
-40	484 714	A	RING - Back up (MS28782-15)	1	
-41	80122-89	A	WASHER	1	
	21710-00	B	WASHER	1	
-42	404 843	A	NUT - (MS20364-1216C)	1	
	404 840	B	NUT - (AN364-1414)	1	
-43	21707-00	B	TUBE ASSEMBLY - Nose gear strut, upper	1	
-44	20787-02	B	BUSHING	2	
-45	460 691	B	FITTING - Lubricator (AN944-101)	1	
-46	21831-04	B	BEARING	1	
-47	484 723	B	RING - Snap (#5100-268)	1	
-48	480 700	B	PIN - Roll (#59-022-094-0375)	1	
-49	21719-11	B	BRACKET ASSEMBLY - Nose gear aligner guide	1	
-50	44386-00	B	ARM ASSEMBLY - Nose gear steering	1	
-51	14976-11	B	BUSHING - Nose gear arm assembly	2	
-52	21709-00	BCZ	BRACKET ASSEMBLY - Shimmy dampener attachment	1	
	21709-00	BCV	BRACKET ASSEMBLY - Shimmy dampener attachment	1	24-3642, 24-4000 to 24-4570 incl.
	25666-00	BV	BRACKET - Shimmy dampener attachment	1	24-4571 and up
-53	21831-03	BZ	BEARING - Shimmy dampener bracket	1	
	21831-03	BV	BEARING - Shimmy dampener bracket	1	24-3642, 24-4000 to 24-4570 incl.
-54	21829-00	B	LUG - Nose gear spring front attachment	1	
-55	21324-00	BV	BRACKET - Nose gear door rod attachment	1	24-3642, 24-4000 to 24-4782 incl., 24-4784 to 24-4803 inclusive
-56	751 834		GASKET - Air valve (AN901-5A)	1	
-57	453 124		BODY - Air valve (AN812-1)	1	
-58	455 124		CORE - Air valve (AN809-1)	1	
-59	751 502		CAP - Air valve (AN813-1B)	1	
-60	27257-00	B	PLACARD - Do not exceed	1	
-61	27258-00	B	PLACARD - Tow turn limits	1	
-62	21215-00	AZ	BRACKET - Gear switch actuating rod, left	1	
	24775-00	AV	BRACKET - Gear switch actuating rod, left	1	

A - Used on main gear strut only.
B - Used on nose gear strut only.
C - Order bracket 25666-00 if shimmy dampener incorporates a self-aligning end bearing.
V - Used on PA-24-260 airplanes only.
Z - Used on PA-24-400 airplanes only.

When ordering, always specify Part Number, Description and Serial Number of Aircraft

Figure and Index Number	Part Number	Code	NOMENCLATURE	No. Req.	SERIAL NUMBERS AFFECTED
19A-63	480 687	A	PIN - Roll, gear switch bracket (#59-012-062-0250)	1	
	419 600	V	SCREW - Drive gear switch bracket (MS21318-15)	1	
-64	401 265	B	BOLT - (AN3H-7A)	3	
	407 564	B	WASHER - (AN960-10)	3	
-65	402 343	A	BOLT - (AN175-34) Left, upper link	1	
	402 345	A	BOLT - (AN175-33) Right, upper link	1	
	402 344	B	BOLT - (AN175-32) Nose, upper link	1	
	407 586		WASHER - (AN960-516L)	2	
	404 102		NUT - (AN310-5)	1	
	424 052		PIN - Cotter (MS24665-134)	1	
-66	402 313		BOLT - (AN174-13) Link joint	1	
	407 565		WASHER - (AN960-416)	2	
	407 585		WASHER - (AN960-416L)	1	
	404 101		NUT - (AN310-4)	1	
	424 052		PIN - Cotter (MS24665-134)	1	
-67	402 344		BOLT - (AN175-32) Lower link	1	
	407 586		WASHER - (AN960-516L)	2	
	404 102		NUT - (AN310-5)	1	
	424 052		PIN - Cotter (MS24665-134)	1	
-68	400 438	B	BOLT - (AN3-4A)	1	
	407 135	B	WASHER - (AN936-A10)	1	
-69	401 263	B	BOLT - (AN3H-3A)	1	
-70	401 264	B	BOLT - (AN3H-4A)	1	
-71	42740-00	B	INDICATOR - Tow turn	1	
-72	419 600	B	SCREW - (MS21318-15)	2	
-73	21587-00	A	BOLT - Oleo bleeder hole	1	
-74	753 172	A	WASHER - Oleo bleeder bolt (21586-00)	1	

A - Used on main gear strut only.
B - Used on nose gear strut only.
V - Used on PA-24-260 airplanes only.

When ordering, always specify Part Number, Description and Serial Number of Aircraft

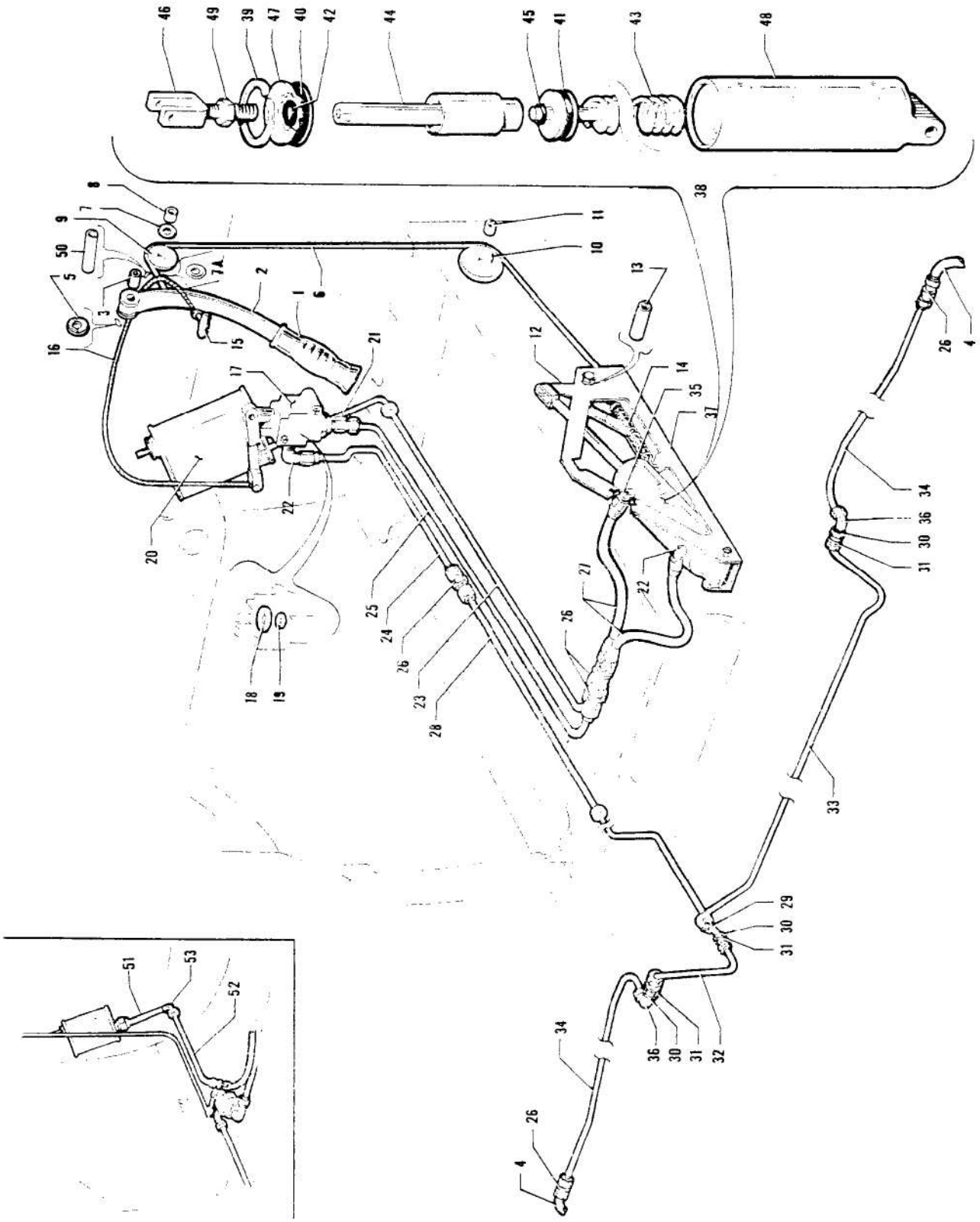

Figure 20. Brake System Installation
(Serial Nos. 24-1 to 24-2174, 24-2176 to 24-2298 inclusive)

Figure and Index Number	Part Number	Code	NOMENCLATURE	No. Req.	SERIAL NUMBERS AFFECTED
20-	20990		DRAWING - Brake Installation		
-1	463 377		GRIP - Brake handle, 5/8" I.D.	1	
	463 380		GRIP - Brake handle, 3/4" I.D.	1	
-2	21927-00		LEVER ASSEMBLY - Brake	1	
-3	82732-48		BUSHING - Brake lever	1	
-4	17766-33		HOSE ASSEMBLY - Lower brake	2	24-1 to 24-3295 inclusive
	17766-71		HOSE ASSEMBLY - Lower brake	2	24-3296 and up
-5	13215-00		WASHER - Brake lever attachment	1	
-6	21077-00		CABLE ASSEMBLY - Brake lever	1	
-7	80122-25		WASHER - Brake cable pulley	2	
-7a	22057-00		WASHER - Brake cable pulley	1	
-8	14843-49		BUSHING - Brake cable upper pulley	1	
-9	41001-00		PULLEY - Brake cable upper	1	
-10	15044-00		PULLEY - Brake cable lower (#G-37)	1	
-11	14843-50		BUSHING - Brake lever lower pulley	1	
-12	21037-00		BELLCRANK ASSEMBLY - Brake cable	1	
-13	14843-46		BUSHING - Brake bellcrank	1	
-14	21035-00		SPRING - Brake cylinder return	1	
-15	471 080		KNOB - Tee, parking brake (KN578A)	1	
-16	16775-00		CABLE ASSEMBLY - Parking brake control	1	
-17	492 031		VALVE ASSEMBLY - Parking (Scott P4200-A2)	1	
	492 060		VALVE ASSEMBLY - Parking (Hoof A-77-A)	1	
-18	752 798		PACKING - "O" ring (Scott 10V70-S7-5)	1	
-19	752 791		PACKING - "O" ring (Scott 10V70-S7-1)	1	
	752 844		PACKING - "O" ring (Hoof MS28784-6)	2	
-20	18290-05		RESERVOIR ASSEMBLY - Brake fluid	1	
-21	476 648		NIPPLE - (AN816-4D)	1	
-22	458 894		ELBOW - 90° (AN822-4D)	3	
-23	21016-00		LINE ASSEMBLY - Brake	1	24-1 to 24-52 inclusive
	21422-00		LINE ASSEMBLY - Brake	1	24-53 and up
-24	21015-00		LINE ASSEMBLY - Brake	1	24-1 to 24-52 inclusive
-25	21018-00		LINE ASSEMBLY - Brake	1	24-1 to 24-52 inclusive
-26	491 050		UNION - (AN815-4D)	5	
-27	17766-08		HOSE ASSEMBLY - Brake cylinder lower part	1	
	17766-08		HOSE ASSEMBLY - Brake cylinder upper part	1	24-1 to 24-52 inclusive
	17766-03		HOSE ASSEMBLY - Brake cylinder upper part	1	24-53 and up
-28	21019-00		LINE ASSEMBLY - Brake	1	24-1 to 24-52 inclusive
	21019-03		LINE ASSEMBLY - Brake	1	24-53 and up
-29	488 311		TEE - (AN804-4D)	1	
-30	477 618		NUT - (AN924-4D)	3	
-31			WASHER - (AN960-716)	3	
-32	21017-00		LINE ASSEMBLY - Brake	1	
-33	21020-00		LINE ASSEMBLY - Brake	1	
-34	21098-00		LINE ASSEMBLY - Brake	2	
-35	458 891		ELBOW - 45 (AN832-4D)	1	
-36	458 900		ELBOW - 90 (AN833-4D)	2	
-37	21031-00		BRACKET ASSEMBLY - Brake cylinder	1	
-38	21030-00		CYLINDER ASSEMBLY - Brake	1	
-39	484 721		RING - Retainer (#5000-106)	1	
-40	484 702		PACKING - "O" ring (AN6227-16)	1	
-41	484 706		PACKING - "O" ring (AN6227-11)	1	
-42	484 701		PACKING - "O" ring (AN6227-7)	1	

When ordering, always specify Part Number, Description and Serial Number of Aircraft

Figure and Index Number	Part Number	Code	NOMENCLATURE	No. Req.	SERIAL NUMBERS AFFECTED
20-43	21051-00		SPRING	1	
-44	21029-00		PLUNGER ASSEMBLY - Brake cylinder	1	
-45	484 700		PACKING - "O" Ring (AN6227-05)	1	
-46	12605-00		CLEVIS - Brake cylinder	1	
-47	19011-00		CAP - Brake cylinder end	1	
-48	21008-00		HOUSING - Brake cylinder	1	
-49	404 322		NUT - (AN316-4R)	1	
-50	80022-96		BUSHING - Brake cable roller	1	
-51	22169-00		LINE ASSEMBLY - Brake	1	24-2202 and up
-52	22170-00		LINE ASSEMBLY - Brake	1	24-2202 and up
-53	458 934		ELBOW - (AN833-4)	1	24-2202 and up

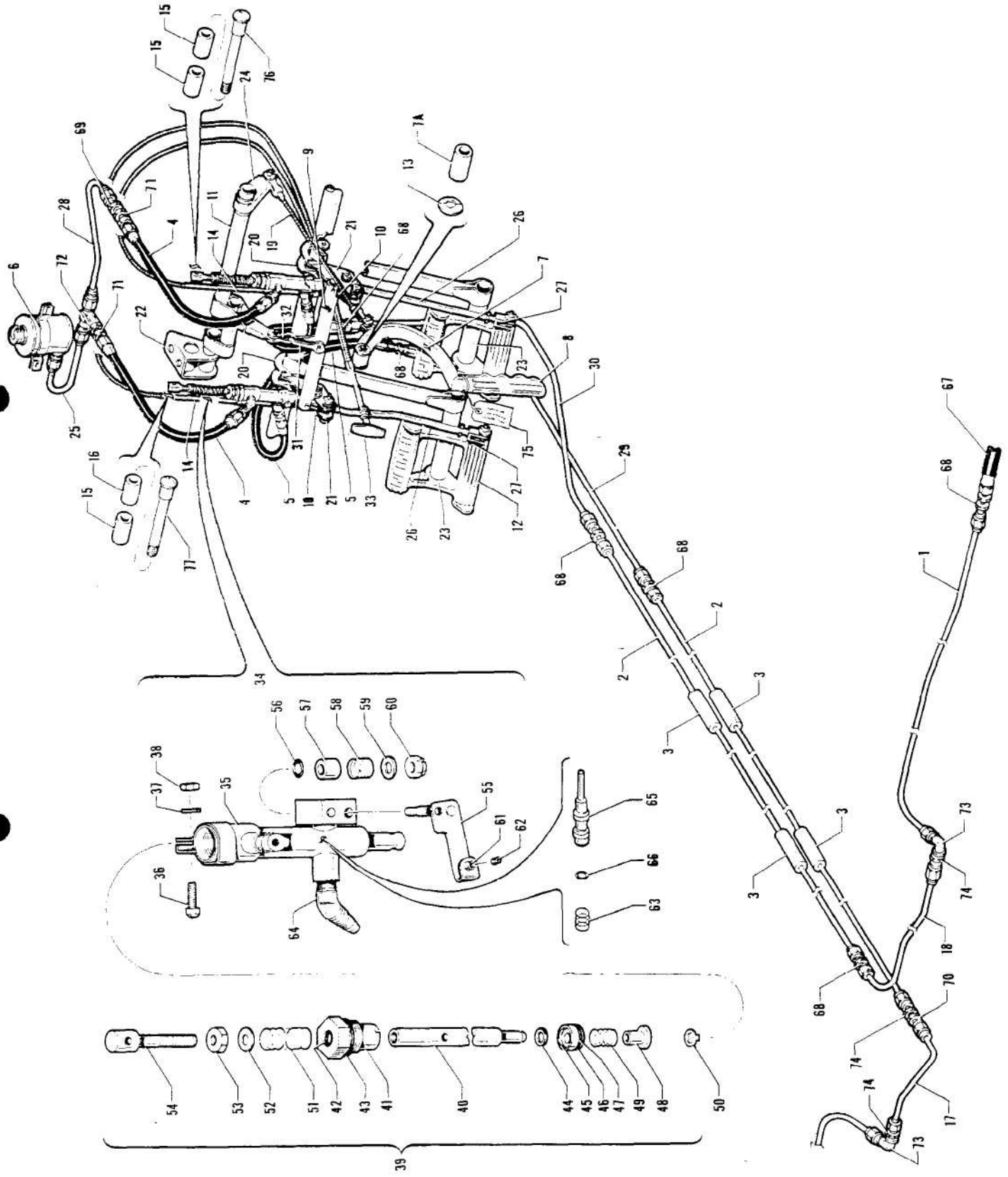

Figure 20A. Toe Brake System Installation
(Serial Nos. 24-2175, 24-2299 and up, 26-2 and up)

PA-24-180
PA-24-250
PA-24-260
PA-24-400

Figure and Index Number	Part Number	Code	NOMENCLATURE	No. Req.	SERIAL NUMBERS AFFECTED
20A-	22405	A	DRAWING - Toe Brake Installation		
	23853	V	DRAWING - Toe Brake Installation		24-4783, 24-4804 and up
-1	21098-00		LINE ASSEMBLY - Brake	2	
-2	22323-00		LINE ASSEMBLY - Brake	2	
-3	82371-37		HOSE	2	
-4	17766-44		HOSE - Flexible I. D. 1/4" L. 11-3/4"	2	
-5	17766-03		HOSE - Flexible I. D. 3/16" L. 10-1/4"	2	
-6	22270-00		RESERVOIR ASSEMBLY - Brake fluid	1	
-7	21927-00	A	LEVER ASSEMBLY - Brake	1	
-7a	82732-48	A	BUSHING	1	
-8	463 380	A	GRIP - Brake lever	1	
-9	22366-00		ARM - Balance	1	
-10	22365-00		CLEVIS	2	
-11	22237-00	A	SHAFT ASSEMBLY - Torque	1	
-12	22048-00		PEDAL - Brake and rudder	2	
-13	13215-00	A	WASHER - Friction	1	
-14	13586-14	A	TUBE - Plastic	2	
	13586-32		TUBE - Plastic, left	1	24-4783, 24-4804 and up
	13586-85		TUBE - Plastic, right	1	24-4783, 24-4804 and up
-15	14976-64		BUSHING - Brake cylinder attachment	3	
-16	14976-65		BUSHING - Brake cylinder attachment	1	24-2175, 24-2299 to 24-4994 incl., 26-2 and up
	80022-119	V	BUSHING - Brake cylinder attachment	1	24-4995 and up
-17	21017-00		LINE ASSEMBLY - Brake	1	
-18	22313-00		LINE ASSEMBLY - Brake	1	
-19	21077-02		CABLE ASSEMBLY	1	24-2175, 24-2299 to 24-3284
	23064-00	B	CABLE ASSEMBLY	1	
-20	22201-00		LINK - Toe brake idler	2	
-21	22201-01		LINK - Toe brake idler	2	
-22	22210-00	A	BRACKET - Hand brake torque tube support	1	
-23	22226-00		TUBE	2	
-24	22234-00	A	ARMREST	1	
-25	22245-00		LINE ASSEMBLY - Brake	1	

A - Used on PA-24-180 and PA-24-250 with serial numbers 24-2175, 24-2299 and up, PA-24-260 with serial numbers 24-3642, 24-4000 to 24-4782 inclusive, 24-4784 to 24-4803 inclusive, and PA-24-400 with serial numbers 26-2 and up.

B - Used on PA-24-180 and PA-24-250 with serial numbers 24-3285 and up, PA-24-260 with serial numbers 24-3642, 24-4000 to 24-4782 inclusive, 24-4784 to 24-4803 inclusive, and PA-24-400 with serial numbers 26-2 and up.

V - Used on PA-24-260 airplanes only.

Figure and Index Number	Part Number	Code	NOMENCLATURE	No. Req.	SERIAL NUMBERS AFFECTED
20A-26	22250-00	A	ROD ASSEMBLY - Connecting, left	1	
	22250-03	B	ROD ASSEMBLY - Connecting, left	1	
	22249-00	A	ROD ASSEMBLY - Connecting, right	1	
	22249-03	B	ROD ASSEMBLY - Connecting, right	1	
-27	16514-00		CLEVIS	2	
-28	22288-00		LINE ASSEMBLY - Brake	1	
-29	22320-00	XY	LINE ASSEMBLY - Brake	1	
	24477-00	VZ	LINE ASSEMBLY - Brake	1	
-30	22321-00		LINE ASSEMBLY - Brake	1	
-31	22324-02	C	CLEVIS	1	
-32	22324-03	C	CLEVIS	1	
-33	455 222	XY	CONTROL - Brake (#653-932-1)	1	24-2175, 24-2299 to 24-3284
	455 256	XY	CONTROL - Brake (#653-932-2)	1	24-3285 to 24-3641 inclusive
	455 272		CONTROL - Brake (#653-906-1)	1	24-3642 and up, 26-2 and up
-34	455 929		CYLINDER ASSEMBLY - Master (10-5)	2	
-35	751 573		HYDRAULIC CYLINDER ASSEMBLY - (189-1)	1	
-36	756 116		SCREW - F. H. Cap (#8-32 x 1/2)	1	
-37	753 171		WASHER - Lock (1208)	1	
-38	752 491		NUT - Jam (#8-32)	1	
-39	752 847		PISTON ROD ASSEMBLY - (182-3)	1	
-40	752 848		ROD - Piston (142-5)	1	
-41	755 810		PACKING - Gland (141-5)	1	
-42	484 701		PACKING - "O" Ring (AN6227-7)	1	
-43	484 706		PACKING - "O" Ring (AN6227-11)	1	
-44	756 618		WASHER - Nylin (95-11)	1	
-45	755 857		PISTON ASSEMBLY - (92-15)	1	
-46	755 858		PISTON - (118-9)	1	
-47	752 746		PACKING - "O" Ring (AN6227-8)	1	
-48	753 381		BUSHING - (145-15)	1	
-49	756 117		SPRING - (82-8)	1	
-50	752 855		RING - Snap (155-5)	1	
-51	756 118		SPRING - (82-9)	1	
-52	753 173		WASHER - (AN960-41)	1	
-53	752 490		NUT - Jam (1/4-28)	1	
-54	753 827		CLEVIS - (143-4)	1	

A - Used on PA-24-180 and PA-24-250 with serial numbers 24-2175, 24-2299 and up, PA-24-400 with serial numbers 26-2 to 26-112 inclusive.
B - Used on PA-24-260 and PA-24-400 with serial numbers 26-113 and up.
C - Used on PA-24-180 and PA-24-250 with serial numbers 24-2175, 24-2299 and up, PA-24-260 with serial numbers 24-3642, 24-4000 to 24-4782 inclusive, 24-4784 to 24-4803 inclusive, and PA-24-400 with serial numbers 26-2 and up.
V - Used on PA-24-260 airplanes only.
X - Used on PA-24-180 airplanes only.
Y - Used on PA-24-250 airplanes only.
Z - Used on PA-24-400 airplanes only.

Figure and Index Number	Part Number	Code	NOMENCLATURE	No. Req.	SERIAL NUMBERS AFFECTED
20A-55	753 828		CAM ASSEMBLY - (181-2)	1	
-56	484 700		PACKING - "O" Ring (AN6227-5)	2	
-57	751 445		BUSHING - (145-7)	1	
-58	756 119		SPRING - (82-10)	1	
-59	407 564		WASHER - (AN960-10)	1	
-60	404 835		NUT - (AN364-1032)	1	
-61	751 446		BUSHING - (145-9)	1	
-62	756 120		SCREW - Set (#8-32 x 1/8)	1	
-63	756 121		SPRING - (82-11)	1	
-64	458 891		FITTING - Tube (AN823-4D)	2	
-65	753 110		VALVE - (146-2)	1	
-66	752 791		PACKING - "O" Ring (AN6227-1)	1	
-67	17766-33	XY	HOSE ASSEMBLY - Lower brake	2	24-1 to 24-3295 inclusive
	17766-71	XY	HOSE ASSEMBLY - Lower brake	2	24-3296 and up
	17766-33	VZ	HOSE ASSEMBLY - Lower brake	2	
-68	491 050		UNION - (AN815-4D)	7	
-69	491 063		UNION - (AN832-4)	1	
-70	491 060		UNION - (AN832-4D)	1	
-71	477 629		NUT - (AN924-4)	2	
-72	488 331		TEE - (AN834-4)	1	
-73	458 900		ELBOW - 90° (AN833-4D)	2	
-74	477 618		NUT - (AN924-4D)	3	
-75	22522-00	A	TAG - Parking brake operation	1	
-76	400 693		BOLT - (AN23-31)	1	
-77	400 692		BOLT - (AN23-30)	1	24-2175, 24-2299 to 24-4994 incl., 26-2 and up
	27229-00	V	BOLT - Special	1	24-4998 and up

A - Used on PA-24-180 and PA-24-250 with serial numbers 24-2175, 24-2299 and up, PA-24-260 with serial numbers 24-3642, 24-4000 to 24-4782 inclusive, 24-4784 to 24-4803 inclusive, and PA-24-400 with serial numbers 26-2 and up.
V - Used on PA-24-260 airplanes only.
X - Used on PA-24-180 airplanes only.
Y - Used on PA-24-250 airplanes only.
Z - Used on PA-24-400 airplanes only.

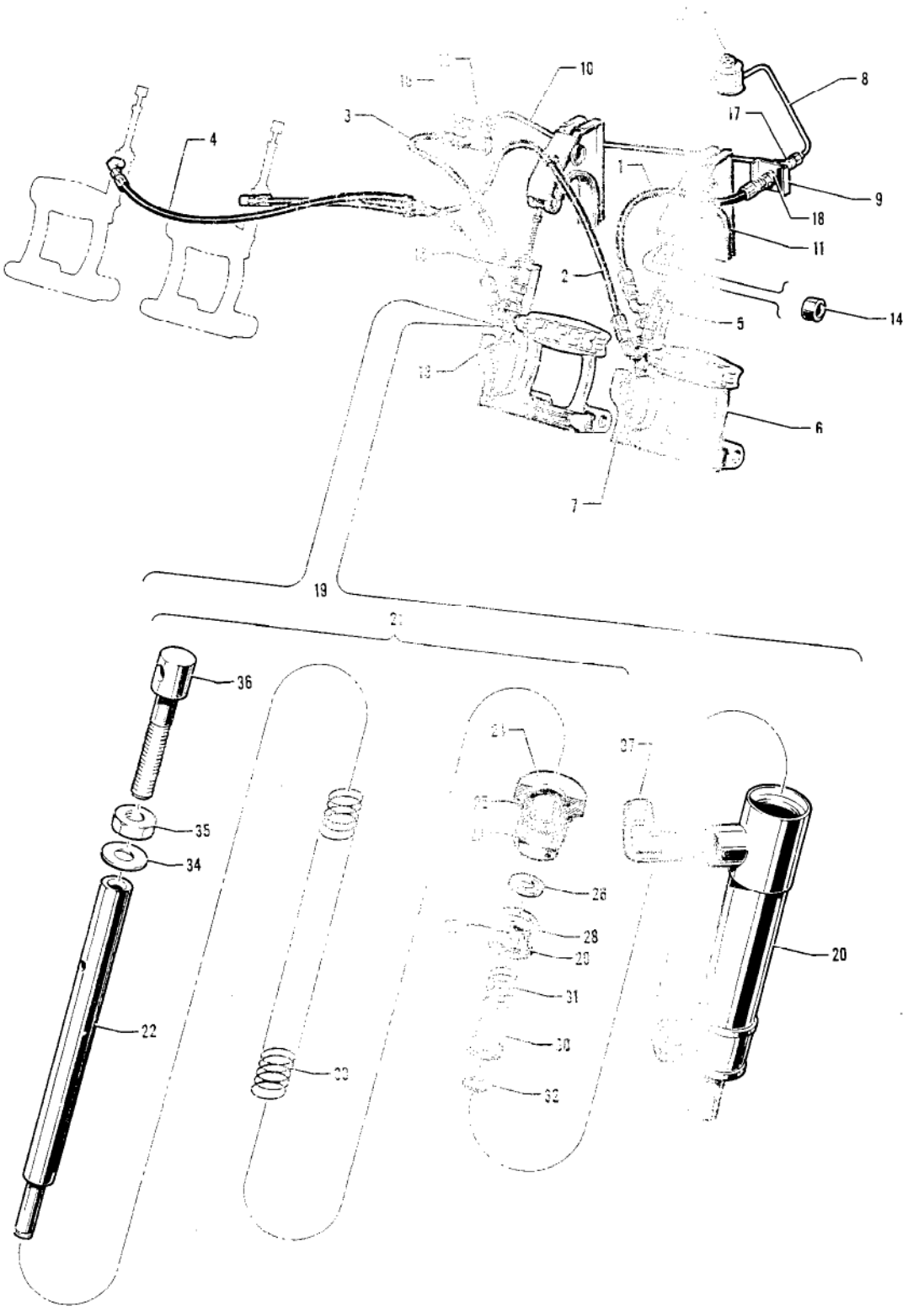

Figure 208. Hand Brake Installation

Figure and Index Number	Part Number	Code	NOMENCLATURE	No. Req.	SERIAL NUMBERS AFFECTED
20B-	27062		DRAWING - Dual Brake Installation		
-1	17766-77		HOSE ASSEMBLY - Flexible, 12-1/4" L	1	
-2	17766-78		HOSE ASSEMBLY - Flexible, 26-11/16" L	1	
-3	17766-79		HOSE ASSEMBLY - Flexible, 10-5/8" L	1	
-4	17766-80		HOSE ASSEMBLY - Flexible, 29-3/4" L	1	
-5	24385-00		BRACKET ASSEMBLY - Brake cylinder cover	2	
-6	24392-00		PEDAL - Brake and rudder	2	
-7	24393-00		COVER - Brake cylinder	2	
-8	27050-00		LINE ASSEMBLY - Brake cylinder reservoir outlet	1	
-9	24426-00		PLATE - Fuselage bulkhead reinforcement	2	
-10	24427-00		LINE ASSEMBLY - Brake	1	
-11	24408-00		BRACKET ASSEMBLY - Brake cylinder, left	1	
	24409-00		BRACKET ASSEMBLY - Brake cylinder, right	1	
-12	22270-03		RESERVOIR ASSEMBLY - Brake fluid	1	
-13	24428-00		TUBE - Brake cylinder extension	2	
-14	61402-71		BUSHING	1	
-15	458 894		ELBOW - (AN822-4D)	4	
-16	458 910		ELBOW - (AN837-4D)	1	
-17	488 311		TEE - (AN804-4D)	1	
-18	477 618		NUT - (AN924-4D)	2	
-19	455 931		CYLINDER ASSEMBLY - Master (10-19)	2	
-20	753 886		HYDRAULIC CYLINDER ASSEMBLY - (189-5)	1	
-21	752 847		PISTON ROD ASSEMBLY - (182-3)	1	
-22	752 848		ROD Piston (142-5)	1	
-23	755 810		GLAND - Packing (141-5)	1	
-24	484 701		PACKING - "O" Ring (AN6227-7)	1	
-25	484 706		PACKING - "O" Ring (AN6227-11)	1	
-26	756 618		WASHER - Nylon (95-11)	1	
-27	755 857		PISTON ASSEMBLY - (92-15)	1	
-28	755 858		PISTON - (148-9)	1	
-29	752 746		PACKING - "O" Ring (AN6227-8)	1	
-30	753 381		BUSHING - (145-15)	1	
-31	756 117		SPRING - (82-8)	1	
-32	752 855		RING - Snap (155-5)	1	
-33	756 118		SPRING - (82-9)	1	
-34	407 585		WASHER - (AN960-416L)	1	
-35	752 490		NUT - Jam (1/4 x 28)	1	
-36	753 827		CLEVIS - (143-4)	1	
-37	458 894		ELBOW - (AN822-4D)	2	

PILOTEN-
Straubing LSA II-
Telefon

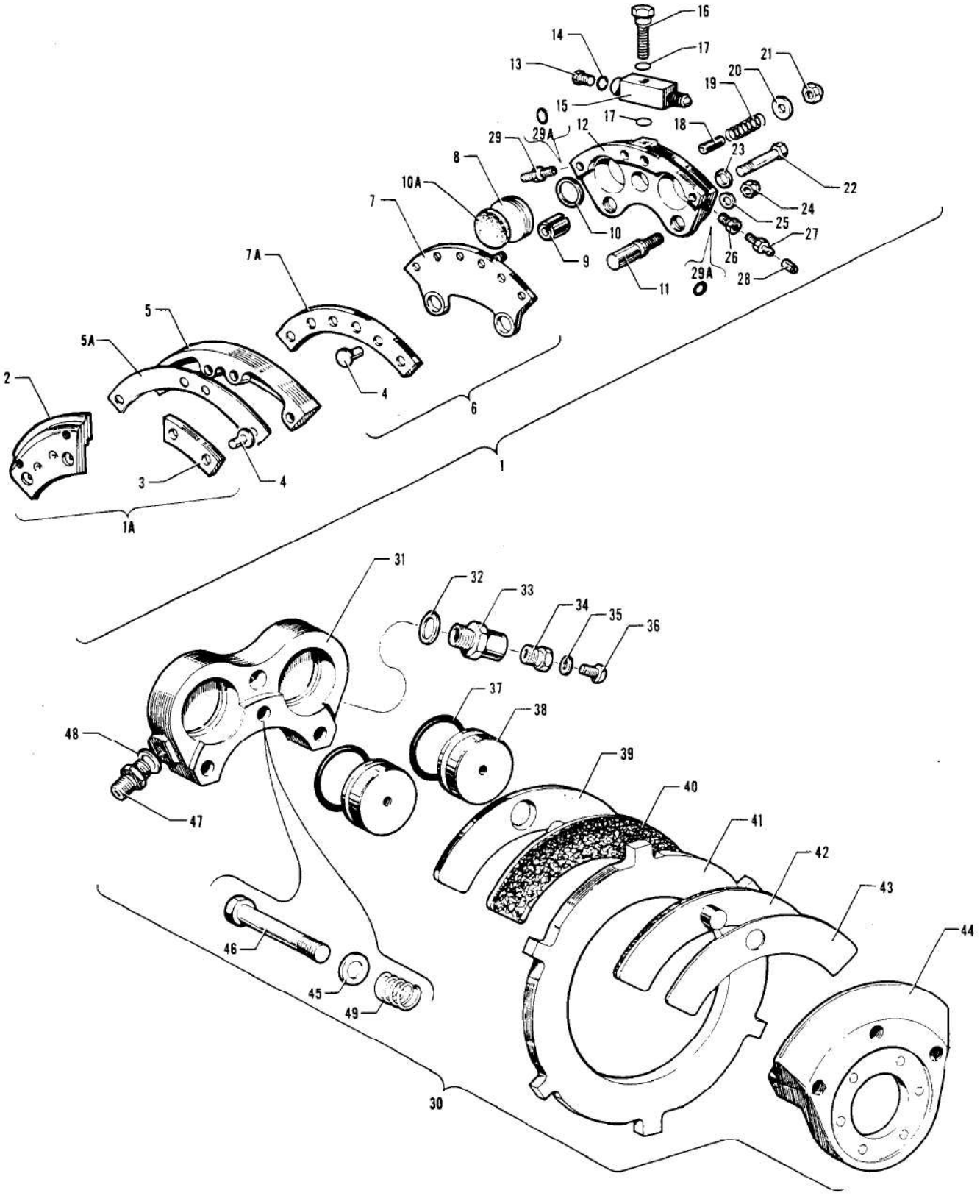

Figure 21. Brake Assembly

Figure and Index Number	Part Number	Code	NOMENCLATURE	No. Req.	SERIAL NUMBERS AFFECTED
21-1	451 716	XY	BRAKE ASSEMBLY - Cleveland (#3000-250)	2	24-1 to 24-3295 inclusive
	551 701	VXY	BRAKE ASSEMBLY - Cleveland (#30-41)	2	24-3296 and up
	551 702	Z	BRAKE ASSEMBLY - Cleveland (#30-23)	2	26-130 and up
-1a	752 768	B	PLATE ASSEMBLY - Back (74-2)	2	
	755 840	C	PLATE ASSEMBLY - Back (74-6)	2	
-2	752 749		PLATE - Back (3012)	1	
-3	752 308	AB	LINING - Back plate (3006)	1	
	752 336	C	LINING - Back plate (66-19)	1	
-4	752 826	AB	RIVET - Brake lining (561)	12	
-5	752 953	AB	SPACER - Back plate (3003D)	1	
	756 148	C	SPACER - Back plate (68-12)	1	
-5a	756 147	C	SHIM - Back plate (68-11)	1	
-6	752 750	A	PLATE ASSEMBLY - Pressure (3011)	1	
	755 829	B	PLATE ASSEMBLY - Pressure (73-4)	1	
	755 839	C	PLATE ASSEMBLY - Pressure (73-6)	1	
-7	752 767	A	PLATE - Pressure (184-1)	1	
	755 830	BC	PLATE - Pressure (63-6)	1	
-7a	752 309	AB	LINING - Pressure plate (3007)	1	
	752 335	C	LINING - Pressure plate (66-15)	1	
-8	752 751	AB	PISTON - Cylinder (3002)	2	
	755 838	C	PISTON - Cylinder (62-7)	2	
-9	751 507	A	CYLINDER - Retract (3004)	2	
-10	484 711	AB	PACKING - "O" ring (AN6227-23) (752 752)	2	
	484 698	C	PACKING - "O" ring (AN6227-27)	2	
-10a	752 094	C	INSULATOR - (88-1)	2	
-11	751 402		BOLT - Anchor (3013)	2	
-12	751 508	A	CYLINDER - Brake (3001)	1	
	753 867	B	CYLINDER - Brake (61-7)	1	
	753 874	C	CYLINDER - Brake (61-10)	1	
-13	752 944	A	SCREW - Bleeder (3009)	1	
-14	752 735	A	PACKING - "O" ring (AN6227-3) (484 707)	1	
-15	751 403	A	BODY - Bleeder (3008)	1	
-16	751 404	A	BOLT - Bleeder body (3010)	1	
-17	484 708	A	PACKING - "O" ring (AN6227-6)	2	
-18	752 945	A	SLEEVE - Retract (3005)	1	
-19	752 946	A	SPRING - Retract (M100)	1	
-20	753 148	A	WASHER - Retract (3016)	1	
-21	404 887	A	NUT - Retract spring (AN365-1032)	1	
-22	751 450	AB	BOLT - Through (AN4H-15A)	4	
	751 468	C	BOLT - Through (AN4H-16A)	4	
-23	407 585		WASHER - (AN960-416L)	4	
-24	404 838		NUT - Anchor bolt (AN364-624)	2	
-25	407 587		WASHER - Anchor bolt (AN960-616L)	2	
-26	752 966	B	SEAT - Bleeder (37-206)	1	
	756 149	C	SEAT - Bleeder (81-2)	1	
-27	752 965	BC	SCREW - Bleeder (FC6446)	1	
-28	753 850	BC	CAP - Bleeder (183-1)	1	

A - Used with #3000-250 Cleveland brake assembly only.
B - Used with #30-41 Cleveland brake assembly only.
C - Used with #30-23 Cleveland brake assembly only.
V - Used on PA-24-260 airplanes only.
X - Used on PA-24-180 airplanes only.
Y - Used on PA-24-250 airplanes only.
Z - Used on PA-24-400 airplanes only.

Figure and Index Number	Part Number	Code	NOMENCLATURE	No. Req.	SERIAL NUMBERS AFFECTED
21-29	476 648	B	NIPPLE - (AN816-4D)	1	
	751 793	C	NIPPLE - (AN815-4D)	1	
-29a	484 701	C	PACKING - "O" ring (AN6227-7)	2	
-30	551 704	Z	BRAKE ASSEMBLY - Goodrich (#2-852-1)	2	26-2 to 26-129 inclusive
-31	751 950	A	HOUSING - Piston (260-143)	1	
-32	751 862	A	GASKET - (AN901-4A)	1	
-33	755 819	A	PLUG - Bleeder (A-49-53)	1	
-34	753 113	A	VALVE - Bleeder (1074893)	1	
-35	407 104	A	WASHER - Lock (AN935-10)	1	
-36	756 130	A	SCREW - (AN520-10-5)	1	
-37	755 820	A	PACKING - "O" ring (68-376)	2	
-38	755 821	A	PISTON - Actuating (74-344)	2	
-39	752 072	A	INSULATOR - Outer (115-61)	1	
-40	753 863	A	CARRIER ASSEMBLY - Lining and button (342-6)	1	
-41	754 525	A	DISC - Brake (133-93)	1	
-42	753 864	A	CARRIER ASSEMBLY - Lining and button (342-5)	1	
-43	752 073	A	INSULATOR - Inner (115-59)	1	
-44	753 028	A	TORQUE PLATE - (184-149-1)	1	
-45	753 197	A	WASHER - (MS20002-6)	3	
-46	401 396	A	BOLT - (AN6-15A)	3	
-47	753 078	A	UNION - (W/H 5815 x 4)	1	
-48	755 822	A	PACKING - "O" ring (68-375)	1	
-49	752 105	A	INSERT - Heli-coil (NAS1222-6E)	3	

A - Used with #2-852-1 Goodrich Brake Assembly only.
B - Used with #30-41 Cleveland brake assembly only.
C - Used with #30-23 Cleveland brake assembly only.
Z - Used on PA-24-400 airplanes only.

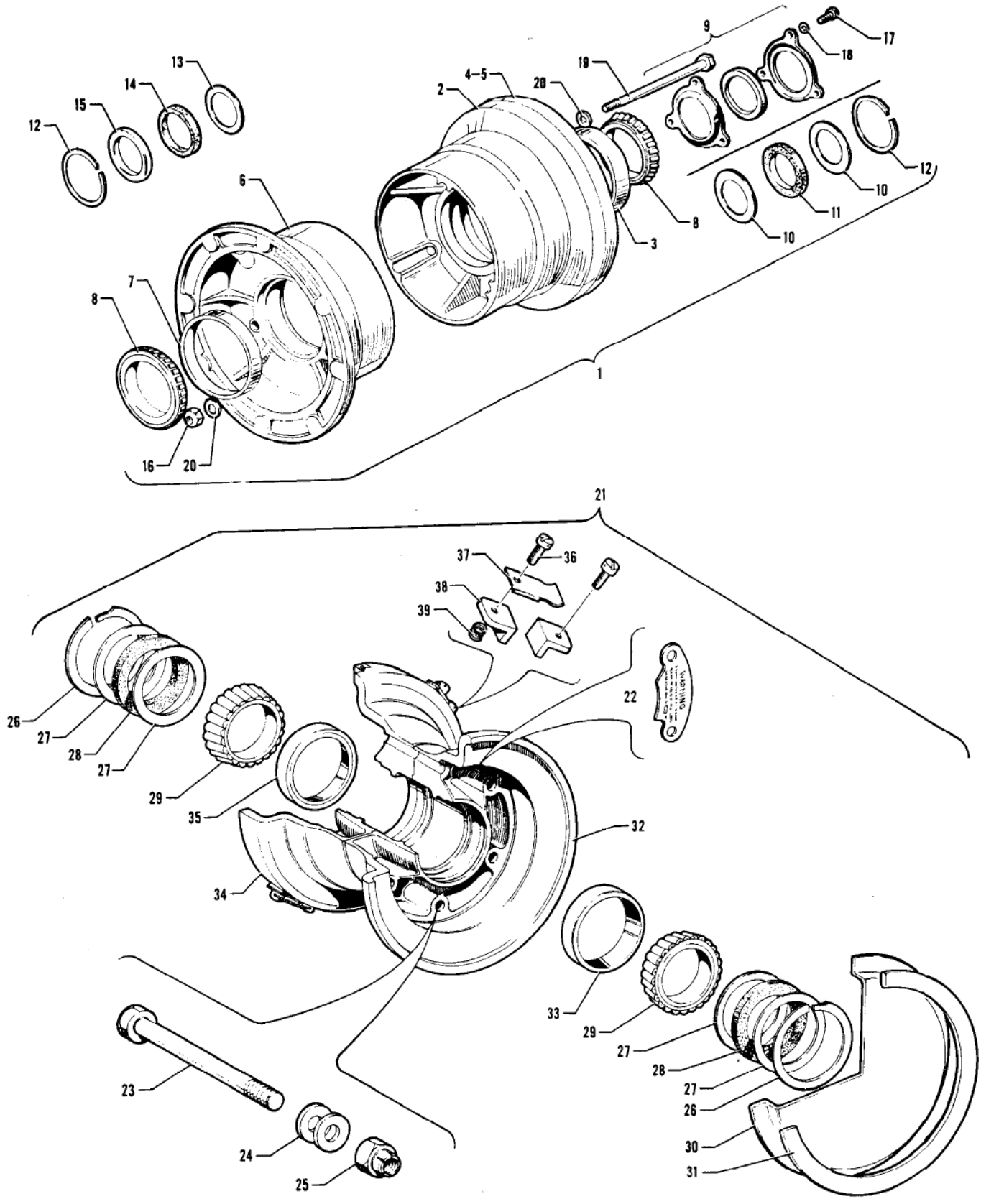

Figure 22. Main Wheel Assembly

Figure and Index Number	Part Number	Code	NOMENCLATURE	No. Req.	SERIAL NUMBERS AFFECTED
22-1	451 765	XY	WHEEL ASSEMBLY - Main (Cleveland #3070)	2	24-1 to 24-3306 inclusive
	451 778	XY	WHEEL ASSEMBLY - Main (Cleveland #40-58)	2	24-3307 and up
	551 752	Z	WHEEL ASSEMBLY - Main (Cleveland #40-90)	2	26-130 and up
	551 750	V	WHEEL ASSEMBLY - Main (Cleveland #40-84)	2	
-2	753 157	B	WHEEL - Half, inner	1	
	753 176	C	WHEEL - Half, inner (161-16)	1	
	753 195	DE	WHEEL - Half, inner (161-30)	1	
-3	751 494		CUP - Bearing (13836)	1	
-4	751 672	B	DRUM - Brake (3015-250A)	1	
-5	754 530	CG	DISC ASSEMBLY - Brake (164-9)	1	
	754 554	DF	DISC ASSEMBLY - Brake (164-22A)	1	
	754 545	EF	DISC ASSEMBLY - Brake (164-19)	1	
-6	753 128	BC	WHEEL - Half, outer (3041-A) (with valve hole)	1	
	753 194	DE	WHEEL - Half, outer (162-27)	1	
-7	751 494		CUP - Bearing (13836)	1	
-8	751 489		BEARING - Cone, Timken (13889)	2	
-9	752 882	BC	GREASE SEAL ASSEMBLY - (B39001)	2	
-10	752 829	DE	RING - Grease seal (3022)	2	
-11	751 772	DE	FELT - Grease seal (3021)	1	
-12	752 830	DE	RING - Snap (3023)	2	
-13	755 929	DE	RING - Grease seal (A39070)	1	
-14	751 810	DE	FELT - Grease seal (154-13)	1	
-15	755 930	DE	RING - Grease seal (153-15)	1	
-16	404 888	BC	NUT - Wheel bolt (AN365-428)	1	
	404 889	DE	NUT - Wheel bolt (AN365-524)	3	
-17	756 129	BC	SCREW - Grease seal (8-32 x 1/2)	6	
-18		BC	LOCK WASHER - Grease seal (#8 internal)	6	
-19	751 384	BC	BOLT - Wheel (AN4-36A)	3	
	751 405	DE	BOLT - Wheel (AN5-35A)	3	
-20	407 565	BC	WASHER - Wheel bolt (AN960-416)	6	
	407 566	DE	WASHER - Wheel bolt (AN960-516)	3	
-21	451 781	Z	WHEEL ASSEMBLY - Main (Goodrich #3-1038-1)	2	26-2 to 26-129 inclusive
-22	755 823	A	PLATE - Instruction (50-141)	1	
-23	401 333	A	BOLT - (AN4-35A)	6	
-24	407 565	A	WASHER - (AN960-416)	6	
-25	404 888	A	NUT - (MS20365-428)	6	
-26	752 819	A	RING - Lock (A-85-113)	2	
-27	752 818	A	RETAINER - Felt (A-56-162)	4	

A - Used with #3-1038-1 Goodrich main wheel assembly only.
B - Used with #3070 Cleveland main wheel assembly only.
C - Used with #40-58 Cleveland main wheel assembly only.
D - Used with #40-90 Cleveland main wheel assembly only.
E - Used with #40-84 Cleveland main wheel assembly only.
F - Not a component part of inner wheel half 161-30.
G - Not a component part of inner wheel half 161-16.
V - Used on PA-24-260 airplanes only.
X - Used on PA-24-180 airplanes only.
Y - Used on PA-24-250 airplanes only.
Z - Used on PA-24-400 airplanes only.

Figure and Index Number	Part Number	Code	NOMENCLATURE	No. Req.	SERIAL NUMBERS AFFECTED
22-28	751 786	A	FELT - (277-51)	2	
-29	751 489	A	CONE - Bearing (13889)	2	
-30	751 763	A	SHIELD - Dust (B-31-13)	1	
-31	752 820	A	RING - Lock (B-85-54)	1	
-32	753 182	A	WHEEL HALF ASSEMBLY - Outer (300-133-1)	1	
-33	751 503	A	CUP - Bearing (13830)	1	
-34	753 184	A	WHEEL HALF ASSEMBLY - Inner (300-132)	1	
-35	751 503	A	CUP - Bearing (13830)	1	
-36	756 131	A	SCREW - (AN501A10-6)	12	
-37	756 132	A	SPRING - Disc retainer (21-201)	6	
-38	754 409	A	KEY - Torque (259-15)	12	
-39	752 074	A	INSERT - Heli-coil (3591-3CNx190)	12	

A - Used with #3-1038-1 Goodrich main wheel assembly only.

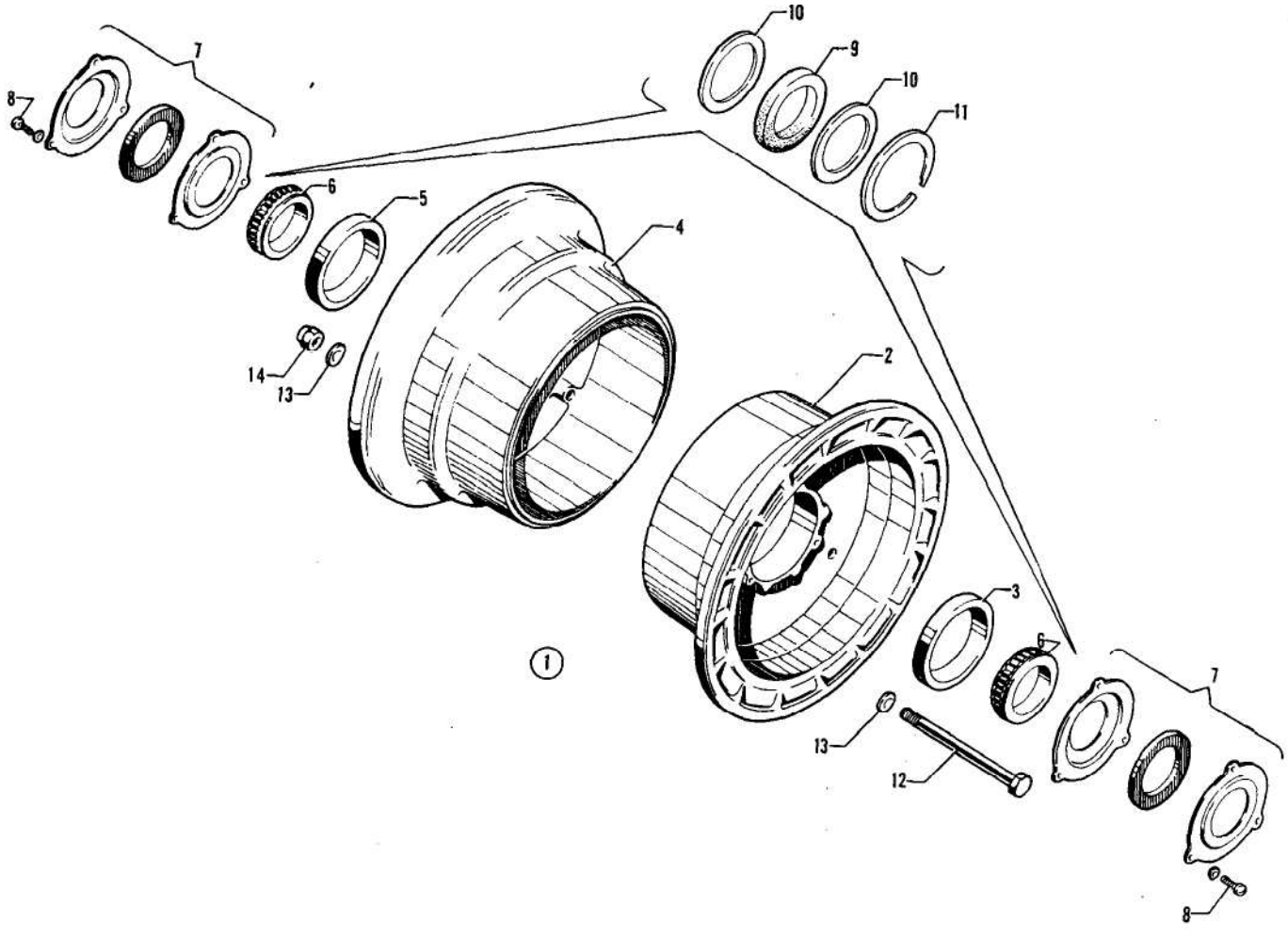

Figure 22A. Nose Wheel Assembly

Figure and Index Number	Part Number	Code	NOMENCLATURE	No. Req.	SERIAL NUMBERS AFFECTED
22A-1	451 755	A	WHEEL ASSEMBLY - Nose (38501)	1	
	451 784	V	WHEEL ASSEMBLY - Nose (40-76B)	1	24-5020, 24-5024 and up
-2	753 129	B	WHEEL HALF ASSEMBLY - Inner (3045A)	1	
	753 195	C	WHEEL HALF ASSEMBLY - Inner (161-30)	1	
-3	751 494		CAP - Bearing (13836)	1	
-4	753 128	B	WHEEL HALF ASSEMBLY - Outer (3041-A) (with valve hole)	1	
	753 194	C	WHEEL HALF ASSEMBLY - Outer (162-27) (with valve hole)	1	
-5	751 494		CAP - Bearing (13836)	1	
-6	751 489		BEARING - Cone, Timken (13889)	2	
-7	752 882	B	GREASE SEAL ASSEMBLY - (B39001)	2	
-8	756 129	B	SCREW - (8-32 x 1/2)	6	
	407 134	B	WASHER - (AN936A8)	6	
-9	751 819	C	FELT - Grease seal (154-14)	2	
-10	755 964	C	RING - Grease seal (153-9)	4	
-11	752 830	C	RING - Snap (3023)	2	
-12	401 334	B	BOLT - (AN4-36A)	3	
	751 405	C	BOLT - (AN5-35A)	3	
-13	407 565	B	WASHER - (AN960-416)	6	
	407 566	C	WASHER - (AN960-516)	6	
-14	404 888	B	NUT - (AN365-428)	3	
	404 889	C	NUT - (AN365-524)	3	

A - Used on PA-24-260 with serial numbers 24-3642, 24-4000 to 24-5019 inclusive, 24-5021 to 24-5023 inclusive, PA-24-180, PA-24-250 and PA-24-400 airplanes. Part is no longer available. Order Wheel Assembly Part No. 451 784 and two spacer bushings Part No. 31786-03 when replacing Model No. 38501 Wheel. Order Part No. 451 784 Wheel only if Model No. 40-76B has previously been installed.
B - Used on Model 38501 Wheel Assembly only.
C - Used on Model 40-76B Wheel Assembly only.
V - Used on PA-24-260 airplanes only.

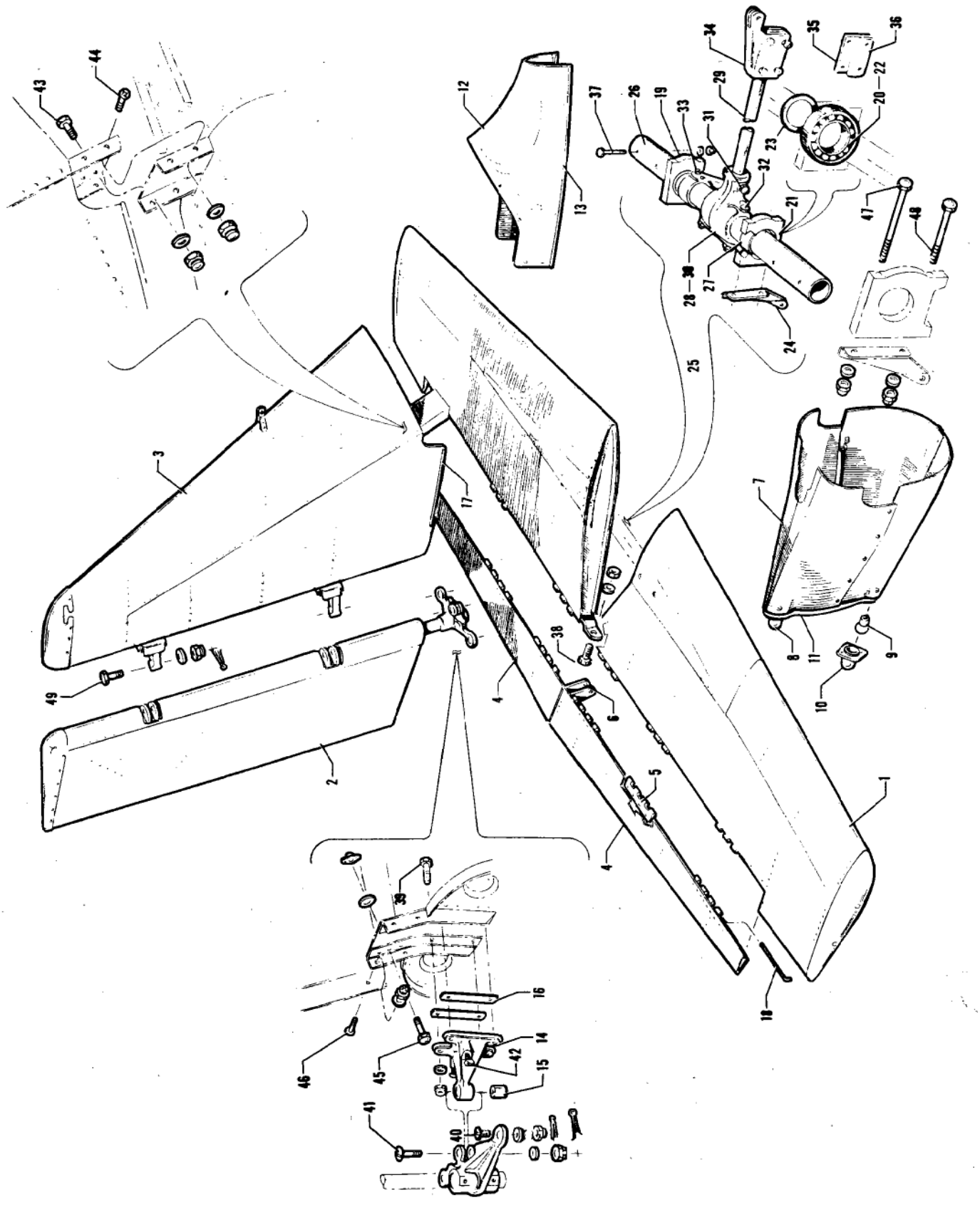

Figure 23. Tail Surfaces Installation "180", "250" & "260"

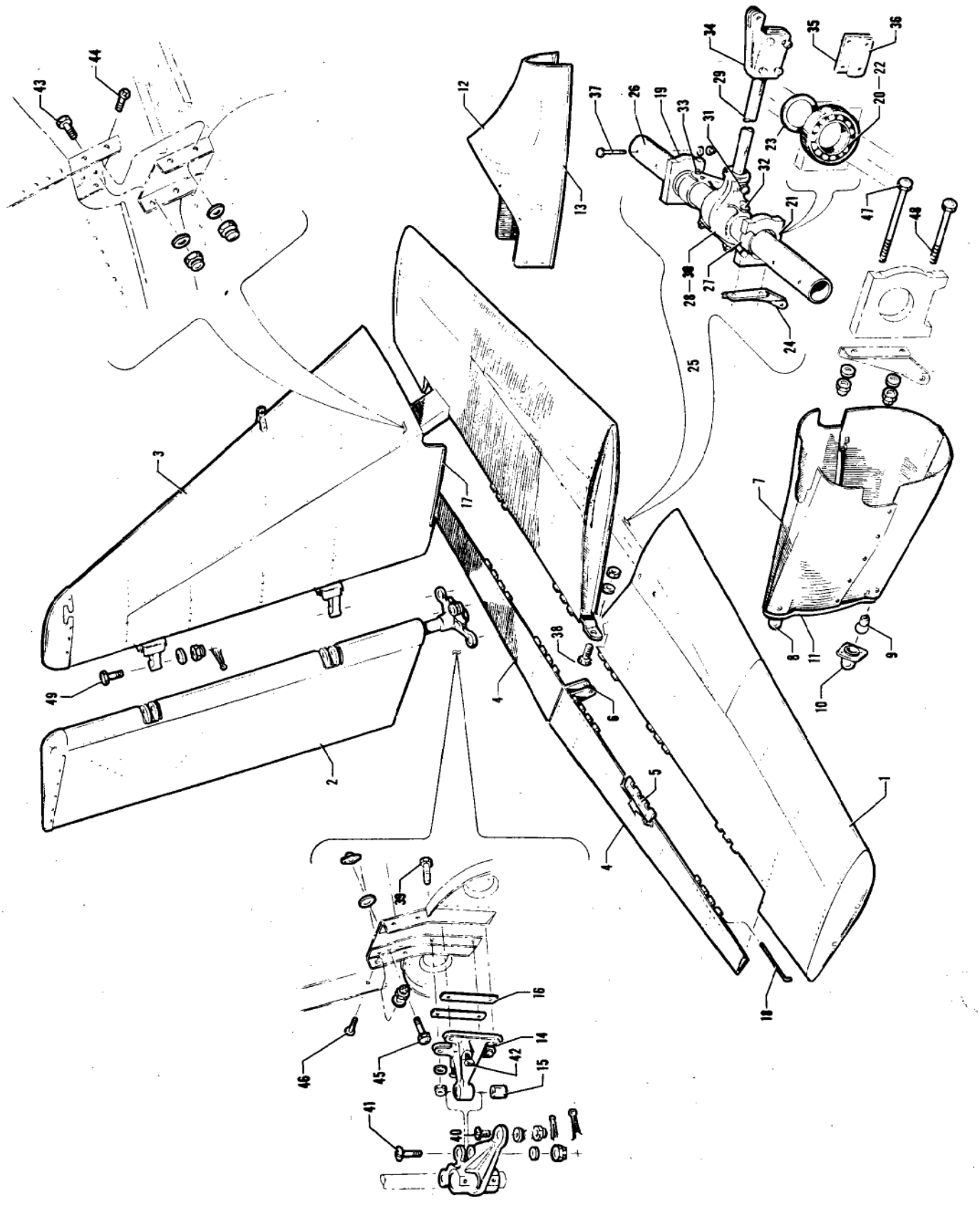

Figure 23. Tail Surfaces Installation "180", "250" & "260"

Figure and Index Number	Part Number	Code	NOMENCLATURE	No. Req.	SERIAL NUMBERS AFFECTED
23-	20843	XY	DRAWING - Tail Surfaces Installation		
	24909	V	DRAWING - Tail Surfaces Installation		
	20206		DRAWING - Stabilator Installation		
-1	20193-36	A	STABILATOR ASSEMBLY - Left (complete)	1	
	20193-35	A	STABILATOR ASSEMBLY - Right (complete)	1	
-2	20729-00	BGXY	RUDDER ASSEMBLY - (Complete)	1	
	20729-16	BFXY	RUDDER ASSEMBLY - (Complete)	1	
	24724-00	BGV	RUDDER ASSEMBLY - (Complete)	1	
	24724-02	BFV	RUDDER ASSEMBLY - (Complete)	1	
-3	20730-00	CXY	FIN ASSEMBLY - (Complete)	1	
	24725-00	CV	FIN ASSEMBLY - (Complete)	1	
-4	20194-00		TAB ASSEMBLY - Stabilator, left	1	
	20194-01		TAB ASSEMBLY - Stabilator, right	1	
-5	20194-18		HINGE - Stabilator tab	3	
-6	20195-00		HORN ASSEMBLY - Stabilator tab	1	
-7	21605-08	DXY	FAIRING - Fuselage tail (complete)	1	24-1 to 24-2843 inclusive
	21786-00	X	FAIRING - Fuselage tail (complete)	1	24-2844 to 24-3334, 24-3336
	21786-03	E	FAIRING - Fuselage tail (complete)	1	
-8	472 667	XY	LIGHT ASSEMBLY - Tail fairing, white	2	
	472 736	V	LIGHT ASSEMBLY - Tail fairing, white (#A2064-1073)	2	
-9	751 382	XY	BULB - Tail fairing (G.E. #93)	1	
	753 431	V	BULB - Tail fairing (#1073)	1	
-10	751 203		LENS - Tail fairing, white	1	
-11	21605-05	X	BULKHEAD ASSEMBLY - Tail fairing	1	24-1 to 24-3334, 24-3336
	21605-05	Y	BULKHEAD ASSEMBLY - Tail fairing	1	24-105 to 24-2843 inclusive
	20804-12	E	BULKHEAD ASSEMBLY - Tail fairing	1	
-12	20404-00		FAIRING ASSEMBLY - Fin	1	
-13	19795-00		EXTRUSION - Rubber	2'	
-14	20713-00		BRACKET ASSEMBLY - Rudder attachment, lower	1	
-15	452 347		BEARING - (#B-47)	1	
-16	81262-72		SHIM - Rudder attachment	AR	
-17	19795-00		EXTRUSION - Rubber	3'	
-18	21510-00		PIN - Stabilator tab hinge	6	

A - See Figure 23B for component parts.
B - See Figure 23D for component parts.
C - See Figure 23F for component parts.
D - Tail light assembly 472 667 is not a component part of this assembly.
E - Used on PA-24-180 with serial numbers 24-3335, 24-3337 and up, PA-24-250 with serial numbers 24-2844 and up, and PA-24-260.
F - Used if Rudder Balance Weight Kit 760 705 has been installed per Service Bulletin No. 362A.
G - Used if Rudder Balance Weight Installation Kit 760 705, per Service Bulletin No. 362A, has not been installed.
V - Used on PA-24-260 airplanes only.
X - Used on PA-24-180 airplanes only.
Y - Used on PA-24-250 airplanes only.

Figure and Index Number	Part Number	Code	NOMENCLATURE	No. Req.	SERIAL NUMBERS AFFECTED
23-19	20207-00		BLOCK ASSEMBLY - Torque tube bearing, left	1	24-1 to 24-2843 inclusive
	20207-00	X	BLOCK ASSEMBLY - Torque tube bearing, left	1	24-2844 to 24-3284 inclusive
	20207-06	A	BLOCK ASSEMBLY - Torque tube bearing, left	1	
-20	452 363		BEARING - (#KP37BS)	1	
-21	20208-00		BLOCK ASSEMBLY - Torque tube bearing, right	1	
-22	452 363		BEARING - (#KP37BS)	1	
-23	80122-84		SHIM - .032	AR	
-24	20835-00		BRACKET - Tab control drum support, left	1	
	20835-01		BRACKET - Tab control drum support, right	1	
-25	20203-00		TUBE ASSEMBLY - Stabilator torque	1	24-1 to 24-102 inclusive
	20203-03		TUBE ASSEMBLY - Stabilator torque	1	24-103 and up
-26	20203-02		TUBE - Stabilator torque	1	
-27	20204-00		COLLAR - Stabilator torque, right	1	
	20205-00		COLLAR ASSEMBLY - Stabilator torque, left	1	
-28	20399-00		HORN ASSEMBLY - Stabilator torque	1	24-1 to 24-102 inclusive
	20399-02		HORN ASSEMBLY - Stabilator torque	1	24-103 and up
-29	20398-00		TUBE - Stabilator horn	1	24-1 to 24-102 inclusive
	20398-02		TUBE - Stabilator horn	1	24-103 and up
-30	20397-00		HORN - Stabilator	1	
-31	402 321		BOLT - (AN174-22A)	1	
	406 682		NUT - (#42E048)	1	
-32	402 346		BOLT - (AN175-33A)	2	
	407 566		WASHER - (AN960-516)	2	
	404 889		NUT - (MS20365-524C)	2	
-33	400 932		BOLT - (AN24-46A)	2	
	404 836		NUT - (MS20364-428C)	2	
-34	20849-00		WEIGHT - Stabilator balance	1	24-1 to 24-102 inclusive
	21740-00		WEIGHT - Stabilator balance	1	24-103 to 24-2843 inclusive
	21740-02	VY	WEIGHT - Stabilator balance	1	24-2844 and up
	21740-00	X	WEIGHT - Stabilator balance	1	24-2844 and up
-35	21564-00		PLATE - Stabilator balance weight	4	24-103 and up
-36	81262-80		LINK - Stabilator balance weight (.062)	AR	
	81262-81		LINK - Stabilator balance weight (.125)	AR	
-37	402 329		BOLT - (AN174-32A)	4	
	407 585		WASHER - (AN960-416L)	4	
	404 888		NUT - (MS20365-428C)	4	
-38	400 002		BOLT - (AN4-5A)	1	
	407 565		WASHER - (AN960-416)	1	
	404 888		NUT - (MS20365-428C)	1	
-39	401 270		BOLT - (AN3-11A)	4	
	407 564		WASHER - (AN960-10)	4	
	404 887		NUT - (MS20365-1032C)	4	
-40	400 675		BOLT - (AN23-13)	2	
	407 564		WASHER - (AN960-10)	2	
	404 100		NUT - (AN310-3)	2	
	424 051		PIN - Cotter (AN380-2-2)	2	

A - Used on PA-24-250 with serial numbers 24-2844 and up, PA-24-180 with serial numbers 24-3285 and up, and PA-24-260.
V - Used on PA-24-260 airplanes only.
X - Used on PA-24-180 airplanes only.
Y - Used on PA-24-250 airplanes only.

When ordering, always specify Part Number, Description and Serial Number of Aircraft

Figure and Index Number	Part Number	Code	NOMENCLATURE	No. Req.	SERIAL NUMBERS AFFECTED
23-41	400 708		BOLT - (AN24-23)	1	
	407 565		WASHER - (AN960-416)	1	
	404 101		NUT - (AN310-4)	1	
	424 051		PIN - Cotter (AN380-2-2)	1	
-42	419 991		SCREW - Button head (#10-32 x 1 L)	2	
	404 224		NUT - (AN315-3R)	2	
-43	400 002		BOLT - (AN4-5A)	6	
	407 565		WASHER - (AN960-416)	6	
	404 888		NUT - (MS20365-428C)	6	
-44	411 231		SCREW - (NAS222-12)	4	
	407 565		WASHER - (AN960-416)	4	
	404 888		NUT - (MS20365-428C)	4	
-45	401 266		BOLT - (AN3-5A)	4	
	407 564		WASHER - (AN960-10)	4	
-46	411 230		SCREW - (NAS222-11)	4	
	407 565		WASHER - (AN960-416)	4	
	404 888		NUT - (MS20365-428C)	4	
-47	401 383		BOLT - (AN5-62A)	2	
	407 566		WASHER - (AN960-516)	2	
	404 889		NUT - (MS20365-524C)	2	
-48	401 380		BOLT - (AN5-54A)	2	
	407 566		WASHER - (AN960-516)	2	
	404 889		NUT - (MS20365-524C)	2	
-49	400 108		BOLT - (AN4-13)	2	
	407 565		WASHER - (AN960-416)	2	
	404 101		NUT - (AN310-4)	2	
	424 051		PIN - Cotter (AN380-2-2)	2	

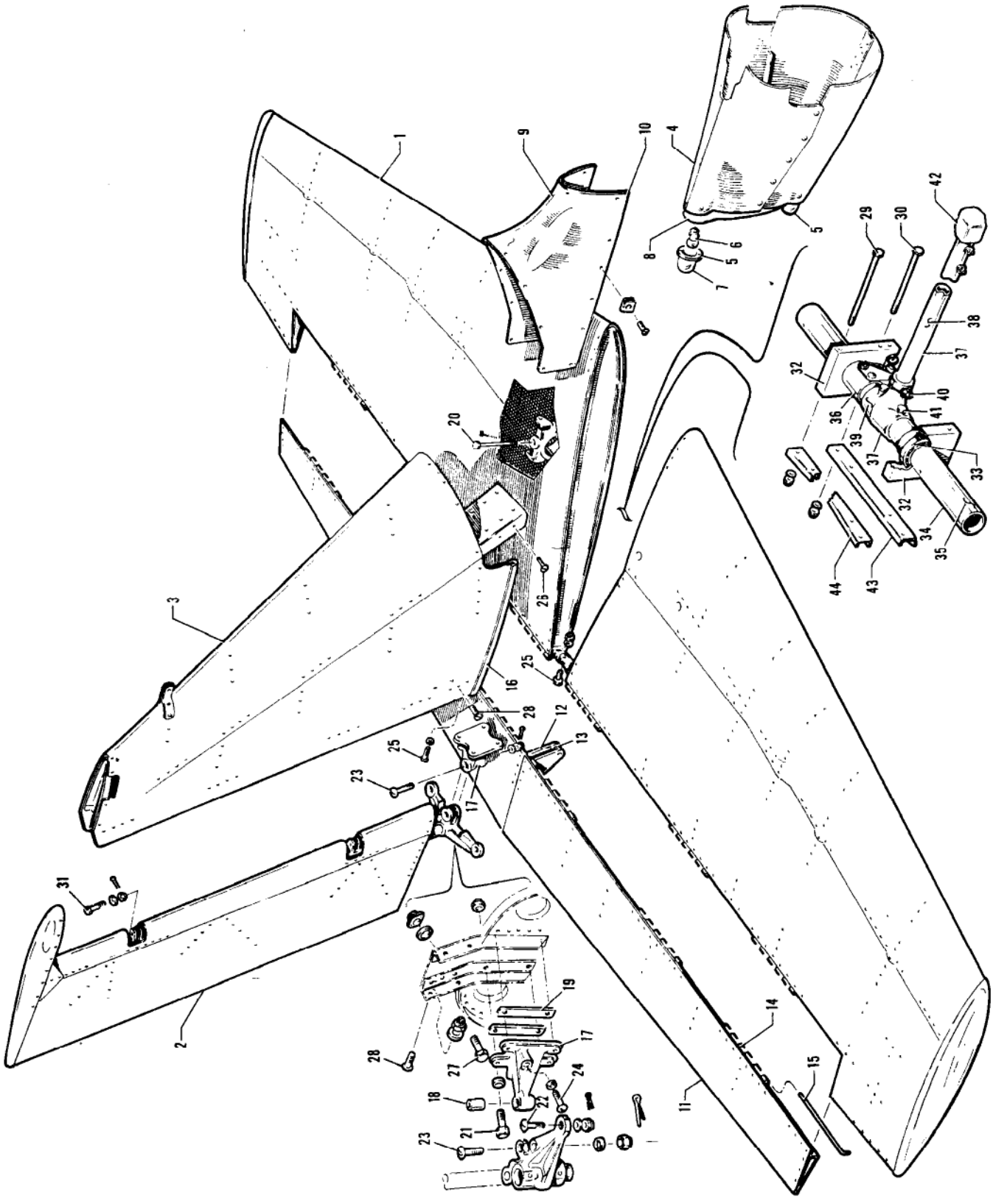

Figure 23A. Tail Surfaces Installation "400"

Figure and Index Number	Part Number	Code	NOMENCLATURE	No. Req.	SERIAL NUMBERS AFFECTED
23A-	22656		DRAWING - Tail Surfaces Installation		
-1	16800-44	A	STABILATOR ASSEMBLY - Left (complete)	1	
	16800-45	A	STABILATOR ASSEMBLY - Right (complete)	1	
-2	23447-00	B	RUDDER ASSEMBLY - (Complete)	1	
-3	23446-00	C	FIN ASSEMBLY - (Complete)	1	
-4	21786-00		FAIRING ASSEMBLY - Fuselage tail (complete)	1	
-5	472 736		LIGHT ASSEMBLY - Tail fairing, white (#A2064-1073)	2	
-6	753 431		BULB - Tail fairing (#1073)	1	
-7	751 203		LENS - Tail fairing, white	1	
-8	21605-05		BULKHEAD ASSEMBLY - Tail fairing	1	
-9	23445-00		FAIRING ASSEMBLY - Fin	1	
-10	19795-00		EXTRUSION - Rubber	2'	
-11	30325-00		TAB ASSEMBLY - Stabilator, left	1	
	30325-01		TAB ASSEMBLY - Stabilator, right	1	
-12	30321-00		HORN ASSEMBLY - Stabilator tab, left	1	
	30321-01		HORN ASSEMBLY - Stabilator tab, right	1	
-13	20737-15		BUSHING - Horn assembly	1	
-14	16914-00		HINGE - Stabilator tab	3	
-15	21510-00		PIN - Stabilator tab hinge	6	
-16	19795-00		EXTRUSION - Rubber	3'	
-17	20713-00		BRACKET ASSEMBLY - Rudder attachment, lower	1	
-18	452 347		BEARING - (#B-47)	1	
-19	81262-72		SHIM - Rudder attachment	AR	
-20	502 329		BOLT - (AN175-C32A)	4	
	407 586		WASHER - (AN960-516L)	4	
	404 889		NUT - (MS20365-524C)	4	
-21	401 270		BOLT - (AN3-11A)	4	
	407 564		WASHER - (AN960-10)	4	
	404 887		NUT - (MS20365-1032C)	4	
-22	400 675		BOLT - (AN23-13)	2	
	407 569		WASHER - (AN960-10)	2	
	404 100		NUT - (AN310-3)	2	
	424 051		PIN - Cotter (AN380-2-2)	2	
-23	400 708		BOLT - (AN24-23)	1	
	407 565		WASHER - (AN960-416)	1	
	404 101		NUT - (AN310-4)	1	
	424 051		PIN - Cotter (AN380-2-2)	1	
-24	419 991		SCREW - Button head (10-32 x 1 L)	2	
	404 224		NUT - (AN315-3R)	2	
-25	400 002		BOLT - (AN4-5A)	7	
	407 565		WASHER - (AN960-416)	7	
	404 888		NUT - (MS20365-428C)	7	
-26	411 231		SCREW - (NAS222-12)	4	
	407 564		WASHER - (AN960-416)	4	
	404 888		NUT - (MS20365-428C)	4	
-27	401 266		BOLT - (AN3-5A)	4	
	407 564		WASHER - (AN960-10)	4	

A - See Figure 23C for component parts.
B - See Figure 23E for component parts.
C - See Figure 23G for component parts.

When ordering, always specify Part Number, Description and Serial Number of Aircraft

Figure and Index Number	Part Number	Code	NOMENCLATURE	No. Req.	SERIAL NUMBERS AFFECTED
23A-28	411 230		SCREW - (NAS222-11)	4	
	407 565		WASHER - (AN960-416)	4	
	404 888		NUT - (MS20365-428C)	4	
-29	401 384		BOLT - (AN5-63A)	2	
	407 566		WASHER - (AN960-516)	2	
	404 889		NUT - (MS20365-524C)	2	
-30	401 382		BOLT - (AN5-56A)	2	
	407 566		WASHER - (AN960-516)	2	
	404 889		NUT - (MS20365-524C)	2	
-31	400 108		BOLT - (AN4-13)	2	
	407 565		WASHER - (AN960-416)	2	
	404 101		NUT - (AN310-4)	2	
	424 051		PIN - Cotter (AN380-2-2)	2	
-32	20207-04		BLOCK ASSEMBLY - Stabilator torque tube bearing, left	1	
	20208-04		BLOCK ASSEMBLY - Stabilator torque tube bearing, right	1	
-33	452 363		BEARING - (#KP37BS)	1	
-34	22655-00		TUBE ASSEMBLY - Stabilator torque	1	
-35	22655-02		TUBE - Stabilator torque	1	
-36	20204-00		COLLAR - Stabilator torque, right	1	
	20205-00		COLLAR ASSEMBLY - Stabilator torque, left	1	
-37	22882-00		HORN ASSEMBLY - Stabilator torque	1	
-38	22880-00		TUBE - Stabilator horn	1	
-39	20397-00		HORN - Stabilator	1	
-40	402 321		BOLT - Stabilator horn (AN174-22A)	1	
	404 888		NUT - Stabilator horn (AN365-428)	1	
-41	402 346		BOLT - Stabilator horn (AN175-33A)	2	
	404 889		NUT - Stabilator horn (MS20365-524)	2	
	407 566		WASHER - Stabilator horn (AN960-516)	2	
-42	23175-00		WEIGHT - Stabilator balance	1	
-43	24179-00		CHANNEL ASSEMBLY - Bearing block reinforcement	1	
-44	27112-00		CHANNEL ASSEMBLY - Bearing block reinforcement	1	

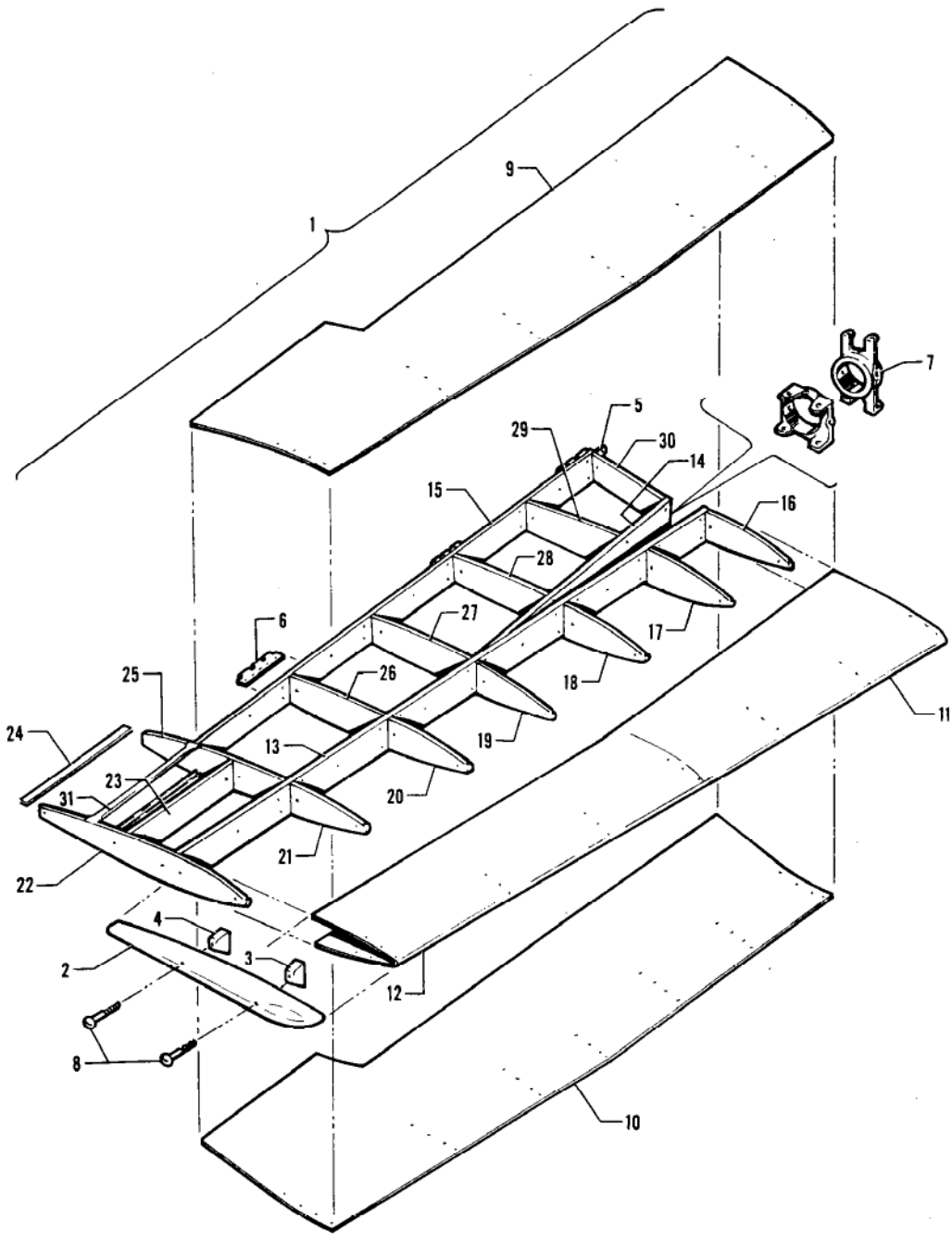

Figure 23B. Stabilator Assembly "180", "250" & "260"

Figure and Index Number	Part Number	Code	NOMENCLATURE	No. Req.	SERIAL NUMBERS AFFECTED
23B-	20193		DRAWING - Stabilator Assembly		
-1	20193-35		STABILATOR ASSEMBLY - Right	1	
	20193-36		STABILATOR ASSEMBLY - Left	1	
-2	21556-00		TIP ASSEMBLY - Stabilator	1	
-3	20257-02		BLOCK - Stabilator tip spacer, front	1	
-4	20257-03		BLOCK - Stabilator tip spacer, rear	1	
-5	20193-25		FITTING - Rear attachment	1	
-6	20193-28		HINGE - Stabilator trim tab	3	
-7	21420-02		FITTING - Stabilator attachment, inboard	1	
	21420-03		FITTING - Stabilator attachment, outboard	1	
-8	415 292		SCREW - Oval head 10-32 x 2-1/2 L, front	1	
	415 289		SCREW - Oval head 10-32 x 2 L, rear	1	
-9	20193-22		SKIN - Stabilator top, left hand	1	
	20193-23		SKIN - Stabilator top, right hand	1	
-10	20193-26		SKIN - Stabilator bottom, left hand	1	
	20193-27		SKIN - Stabilator bottom, right hand	1	
-11	20193-20		SKIN - Stabilator leading edge, root	1	
-12	20193-21		SKIN - Stabilator leading edge, tip	1	
-13	20197-00		SPAR ASSEMBLY - Stabilator, main	1	
-14	20198-00		SPAR ASSEMBLY - Stabilator, stub	1	
-15	20193-32		SPAR ASSEMBLY - Stabilator, rear, left	1	
	20193-33		SPAR ASSEMBLY - Stabilator, rear, right	1	
-16	20193-07		RIB - Stabilator nose	1	
-17	20193-08		RIB - Stabilator nose	1	
-18	20193-09		RIB - Stabilator nose	1	
-19	20193-10		RIB - Stabilator nose	1	
-20	20193-11		RIB - Stabilator nose	1	
-21	20193-12		RIB - Stabilator nose	1	
-22	20193-29		RIB ASSEMBLY - Stabilator tip	1	
-23	20193-41	A	CHANNEL - Stabilator skin stiffener	1	
	27059-00	B	CHANNEL - Stabilator skin stiffener	2	
-24	20193-24		STRIP - Stiffener	1	
-25	20193-19		RIB - Stabilator, rear	1	
-26	20193-18		RIB - Stabilator, rear	1	
-27	20193-17		RIB - Stabilator, rear	1	
-28	20193-16		RIB - Stabilator, rear	1	
-29	20193-15		RIB - Stabilator, rear	1	
-30	20194-14		RIB - Stabilator, rear	1	
-31	27059-00	B	CHANNEL - Stabilator skin stiffener	2	

A - Used on PA-24-180 and PA-24-250 with serial numbers 24-1 and up, and PA-24-260 with serial numbers 24-3642, 24-4000 to 24-4929 inclusive.

B - Used on PA-24-260 with serial numbers 24-4930 and up.

PILOTEN-SERVICE
Straubing LBA II-A-170
Telefon (09429) 716

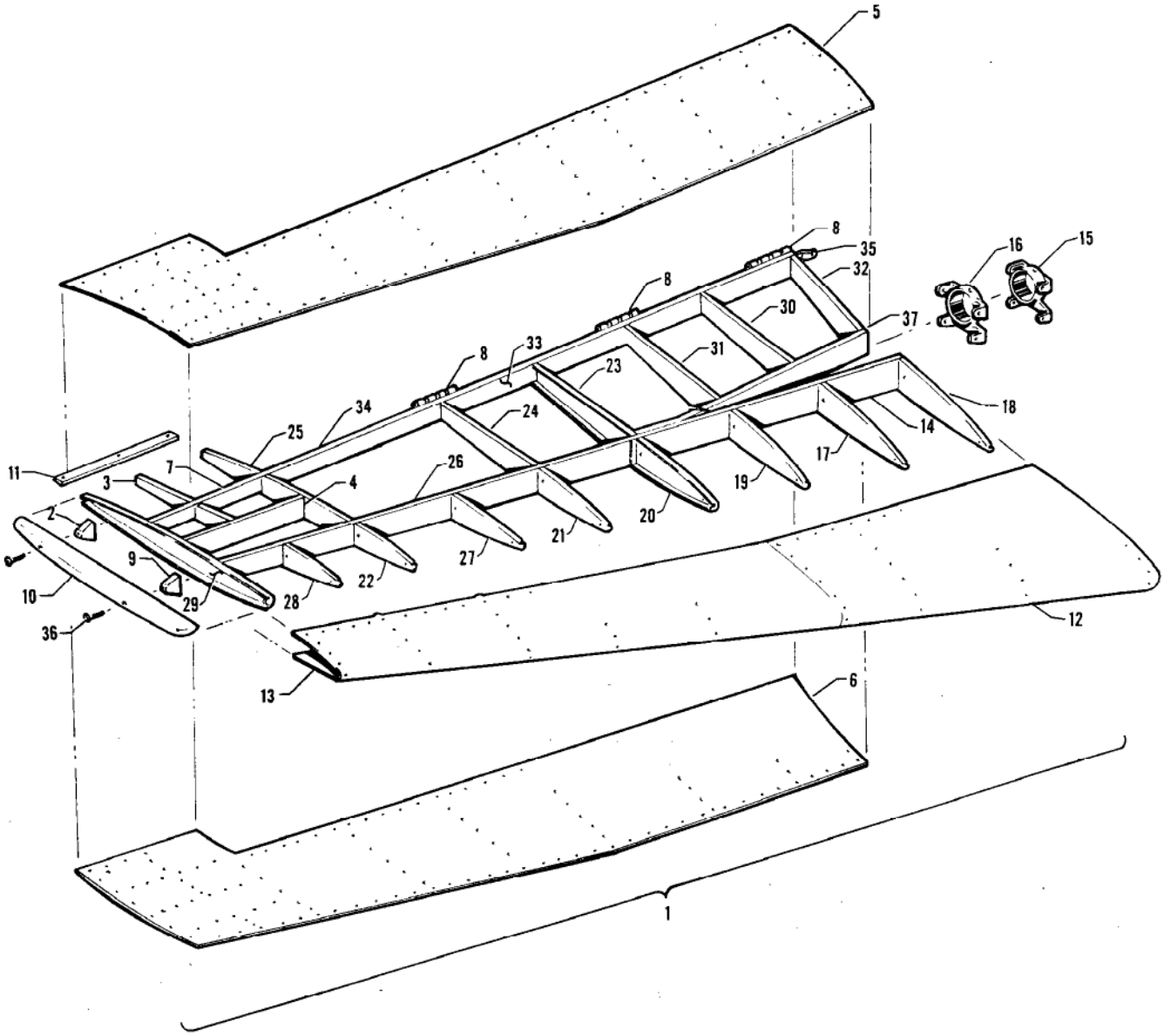

Figure 23C. Stabilator Assembly "400"

Figure and Index Number	Part Number	Code	NOMENCLATURE	No. Req.	SERIAL NUMBERS AFFECTED
23C-	16800		DRAWING - Stabilator Assembly		
-1	16800-44		STABILATOR ASSEMBLY - Left	1	
	16800-45		STABILATOR ASSEMBLY - Right	1	
-2	16110-02		BLOCK - Stabilator tip attachment, rear	1	
-3	16800-38		RIB - Right	1	
	16800-36		RIB - Left	1	
-4	16800-28		STIFFENER - Rib	1	
-5	16800-48		SKIN - Top, left	1	
	16800-49		SKIN - Top, right	1	
-6	16800-50		SKIN - Bottom, left	1	
	16800-51		SKIN - Bottom, right	1	
-7	16999-00		CHANNEL - Stabilator skin stiffener	1	
-8	16914-00		HINGE - Tail surface tab	3	
-9	16110-03		BLOCK - Stabilator tip attachment, front	1	
-10	16109-00		TIP - Stabilator	1	
-11	20193-24		STRIP	1	
-12	16800-52		SKIN - Leading edge, root	1	
-13	16800-55		TIP SKIN - Leading edge	1	
-14	16800-56		FRONT SPAR ASSEMBLY	1	
-15	16809-02		FITTINGS - Stabilator attachment	1	
-16	16809-03		FITTINGS - Stabilator attachment	1	
-17	16800-08		NOSE RIB - Stabilator attachment	1	
-18	16800-07		NOSE RIB - Stabilator attachment	1	
-19	16800-09		NOSE RIB - Stabilator attachment	1	
-20	16800-10		NOSE RIB - Stabilator attachment	1	
-21	16800-11		NOSE RIB - Stabilator attachment	1	
-22	16800-12		NOSE RIB - Stabilator attachment	1	
-23	16800-17		RIB - Stabilator attachment	1	
-24	16800-18		RIB - Stabilator attachment	1	
-25	16800-19		RIB - Stabilator attachment	1	
-26	16802-00		SPAR ASSEMBLY - Stabilator, main	1	
-27	16800-53		NOSE RIB - Stabilator, main	1	
-28	16800-54		NOSE RIB - Stabilator, main	1	
-29	16800-29		RIB ASSEMBLY - Stabilator, main	1	
-30	16800-15		RIB - Stabilator, main	1	
-31	16800-16		RIB - Stabilator, main	1	
-32	16800-14		RIB - Stabilator, left	1	
	16800-37		RIB - Stabilator, right	1	
-33	16800-32		REAR SPAR ASSEMBLY - Left	1	
	16800-33		REAR SPAR ASSEMBLY - Right	1	
-34	16800-02		REAR SPAR - Left	1	
	16800-03		REAR SPAR - Right	1	
-35	20193-25		FITTING - Rear attachment	1	
-36	415 292		SCREW - Oval head, 10 x 32 front, 2-1/2 L	1	
	415 289		SCREW - Oval head, 10 x 32 rear, 2 L	1	
-37	16803-00		SPAR ASSEMBLY - Stabilator stub	1	

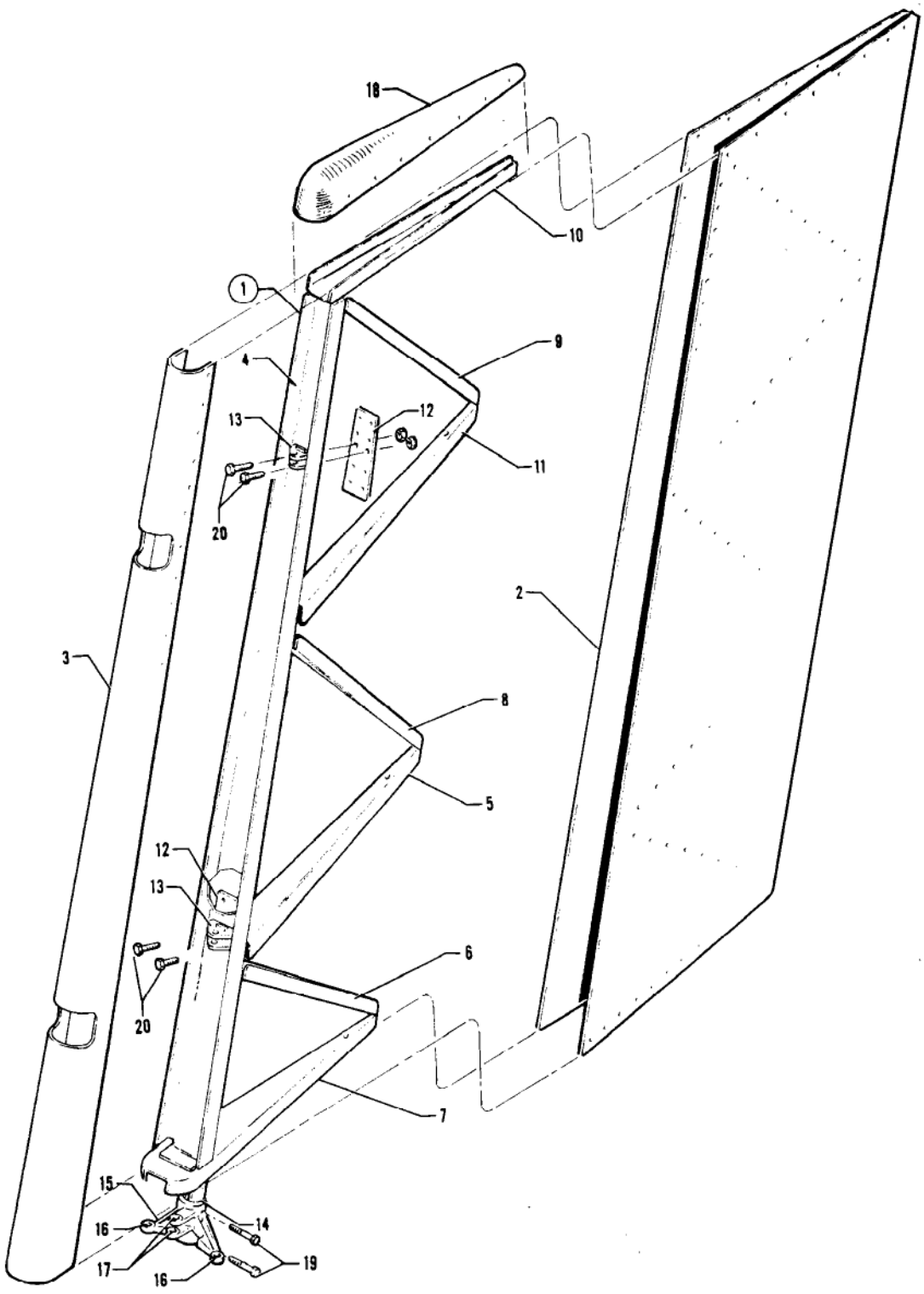

Figure 23D. Rudder Assembly "180", "250" & "260"

Figure and Index Number	Part Number	Code	NOMENCLATURE	No. Req.	SERIAL NUMBERS AFFECTED
23D-	20729	XY	DRAWING - Rudder Assembly		
	24724	V	DRAWING - Rudder Assembly		
-1	20729-00	AXY	RUDDER ASSEMBLY - (With non-slotted tip)	1	
	20729-16	BXY	RUDDER ASSEMBLY - (With slotted tip)	1	
	24724-00	AV	RUDDER ASSEMBLY - (With non-slotted tip)	1	
	24724-02	BV	RUDDER ASSEMBLY - (With slotted tip)	1	
-2	20729-08		SKIN - Trailing edge	1	
-3	20729-09		SKIN - Leading edge	1	
-4	20729-10		SPAR - Rudder	1	
-5	20729-02		RIB - Rudder	1	
-6	20729-03		RIB - Rudder	1	
-7	20729-04		RIB - Rudder	1	
-8	20729-05		RIB - Rudder	1	
-9	20729-06		RIB - Rudder	1	
-10	20729-07		RIB - Rudder	1	
-11	20729-15		RIB - Rudder	1	
-12	20729-11		PLATE - Hinge attachment, bottom	1	
	20729-12		PLATE - Hinge attachment, top	1	
-13	20183-00		HINGE ASSEMBLY - Rudder, top	1	
	20183-03		HINGE ASSEMBLY - Rudder, bottom	1	
-14	20184-00		TUBE ASSEMBLY - Rudder torque	1	
-15	20185-00	XY	HORN ASSEMBLY - Rudder	1	
	20185-00	V	HORN ASSEMBLY - Rudder	1	24-3642, 24-4000 to 24-4312 incl., 24-4314, 24-4316 to 24-4343 incl.
	25139-02	V	HORN ASSEMBLY - Rudder	1	24-4313, 24-4315, 24-4344 and up
-16	82732-98		BUSHING - Rudder horn	2	
-17	82732-99		BUSHING - Rudder horn	2	
-18	21555-00	AXY	TIP ASSEMBLY - Rudder (without slot)	1	
	21555-02	BXY	TIP ASSEMBLY - Rudder (with slot)	1	
	24846-00	AV	TIP ASSEMBLY - Rudder (without slot)	1	
	24846-04	BV	TIP ASSEMBLY - Rudder (with slot)	1	
-19	402 316		BOLT - (AN174-15A)	2	
	407 565		WASHER - (AN960-416)	2	
	404 888		NUT - (MS20365-428C)	2	
-20	400 438		BOLT - (AN3-4A)	4	

A - Used if Rudder Balance Weight Installation Kit 760 705, per Service Bulletin No. 362A, has not been installed.
B - Used if Rudder Balance Weight Installation Kit 760 705 has been installed per Service Bulletin No. 362A.
V - Used on PA-24-260 airplanes
X - Used on PA-24-180 airplanes only.
Y - Used on PA-24-250 airplanes only.

Figure and Index Number	Part Number	Code	NOMENCLATURE	No. Req.	SERIAL NUMBERS AFFECTED
23D-21	27970-00	A	ARM - Rudder balance weight	1	
-22	27971-00	A	WEIGHT - Rudder balance	4	
-23	27969-00	A	ANGLE ASSEMBLY - Balance weight attachment	2	
-24	400 443	A	BOLT - (AN3-12A)	4	
	407 564	A	WASHER - (AN960-10)	4	
	404 887	A	NUT - (MS20365-1032C)	4	
-25	410 244	A	SCREW - (MS24694-S8)	4	
	407 563	A	WASHER - (AN960-8)	4	
	404 910	A	NUT - (MS20365-832C)	4	

A - Used if Rudder Balance Weight Installation Kit 760 705 has been installed per Service Bulletin No. 362A.

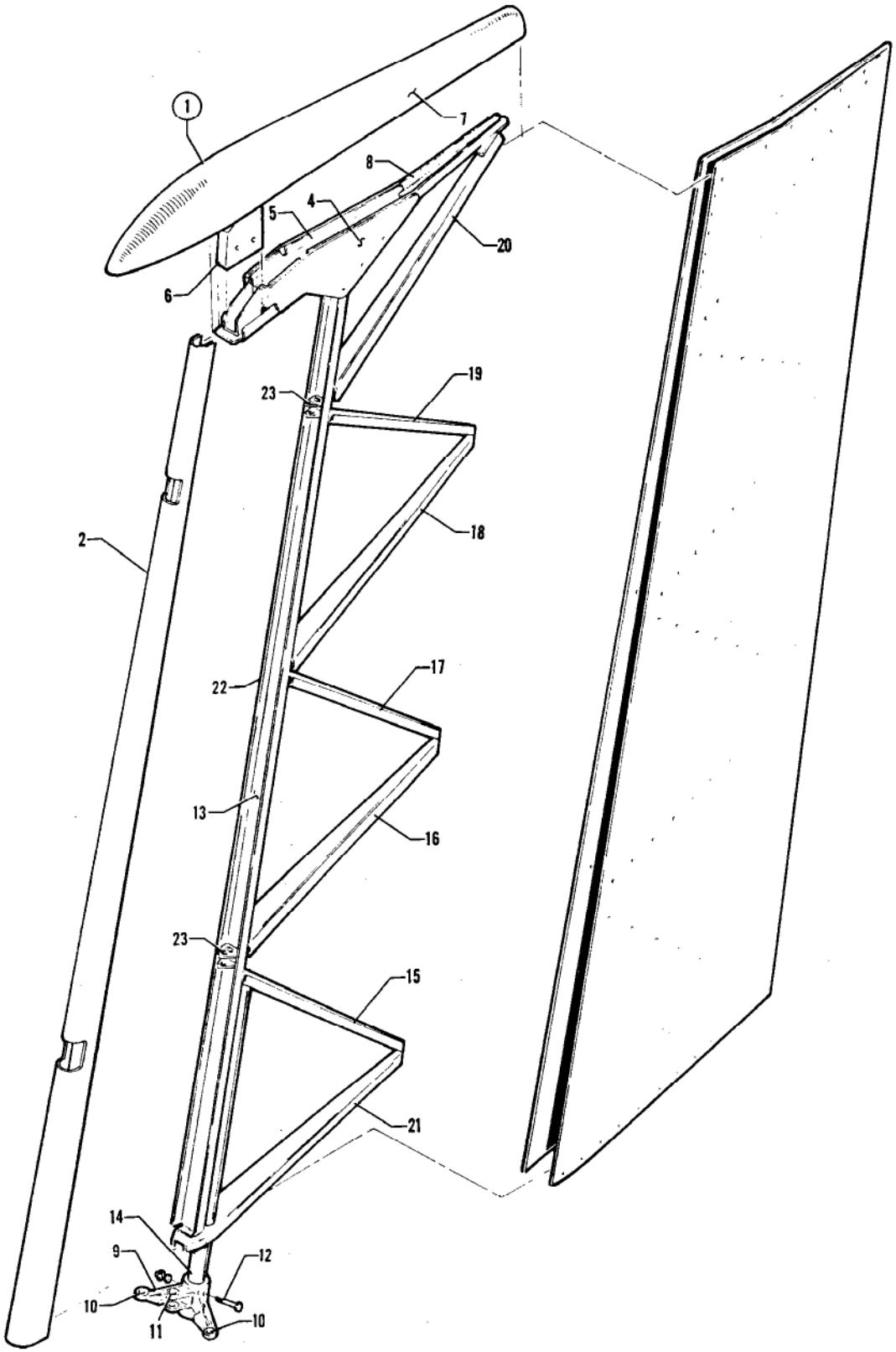

Figure 23E. Rudder Assembly "400"

Figure and Index Number	Part Number	Code	NOMENCLATURE	No. Req.	SERIAL NUMBERS AFFECTED
23E-	23447		DRAWING - Rudder Assembly		
-1	23447-00		RUDDER ASSEMBLY	1	
-2	23447-09		SKIN - Leading edge	1	
-3	23447-10		SKIN - Trailing edge	1	
-4	23437-00		SKIN - Rudder balance arm, left	1	
	23437-01		SKIN - Rudder balance arm, right	1	
-5	23436-00		RIB - Rudder balance arm	1	
-6	23454-00		WEIGHT - Rudder balance	1	
-7	23451-00		TIP - Rudder	1	
-8	23439-00		RIB - Rudder tip	1	
-9	20185-00		HORN ASSEMBLY - Rudder	1	
-10	82732-98		BEARING - Rudder horn	2	
-11	82732-99		BEARING - Rudder horn	2	
-12	402 316		BOLT - (AN174-15A)	2	
	407 565		WASHER - (AN960-416)	2	
	404 888		NUT - (MS20365-428C)	2	
-13	23447-02		SPAR ASSEMBLY - Rudder	1	
-14	23448-00		TUBE ASSEMBLY - Rudder torque	1	
-15	23447-03		RIB	1	
-16	23447-04		RIB	1	
-17	23447-05		RIB	1	
-18	23447-06		RIB	1	
-19	23447-07		RIB	1	
20	23447-08		RIB	1	
-21	20729-04		RIB	1	
-22	23447-11		SPAR	1	
-23	20183-03		HINGE ASSEMBLY - Rudder, bottom	1	
	20183-05		HINGE ASSEMBLY - Rudder, top	1	

When ordering, always specify Part Number, Description and Serial Number of Aircraft

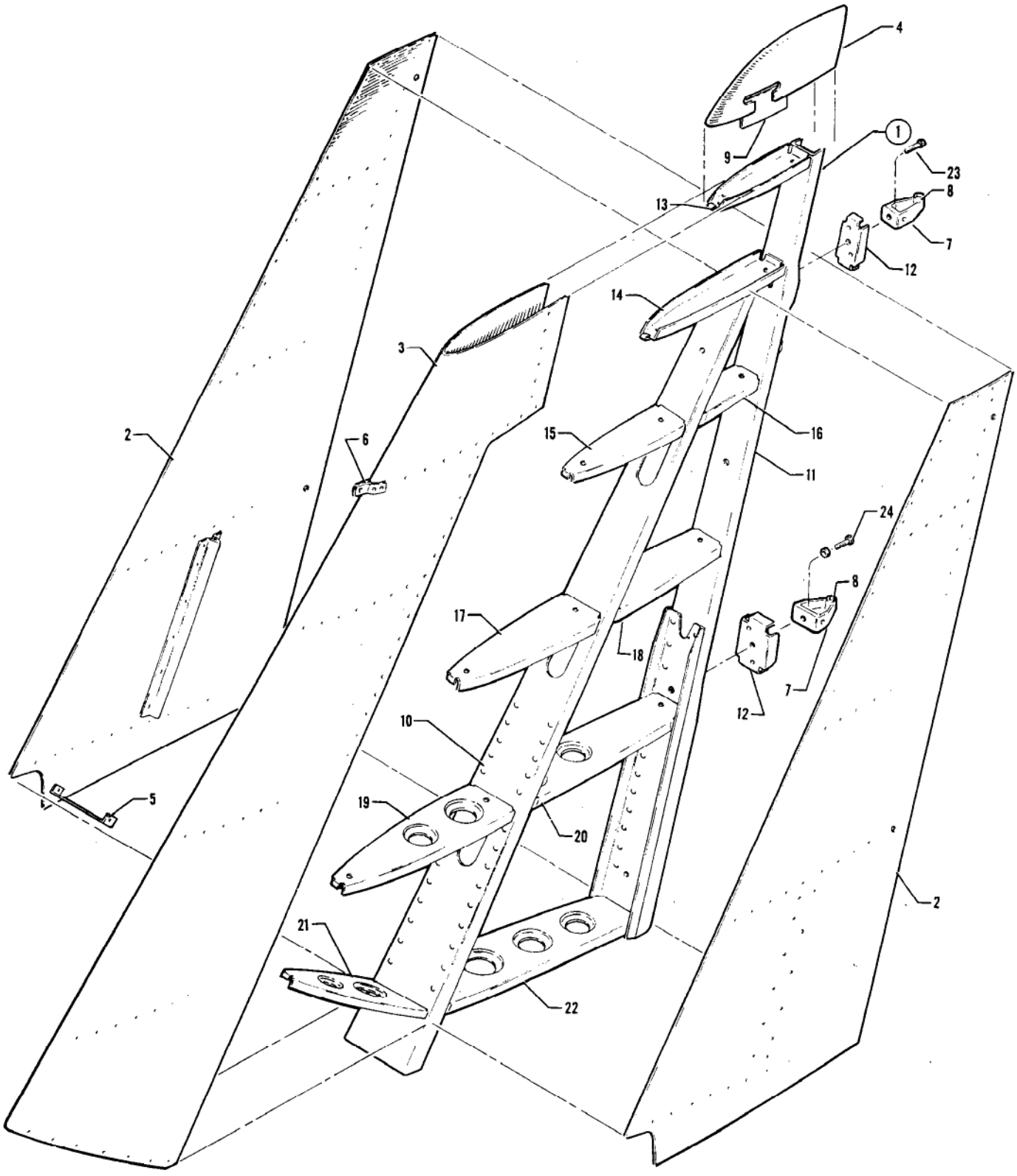

Figure 23F. Fin Assembly "180", "250" & "260"

Figure and Index Number	Part Number	Code	NOMENCLATURE	No. Req.	SERIAL NUMBERS AFFECTED
23F-	20730	XY	DRAWING - Fin Assembly		
	24725	V	DRAWING - Fin Assembly		
-1	20730-06	XY	FIN ASSEMBLY	1	
	24725-00	V	FIN ASSEMBLY	1	
-2	20730-04		SKIN ASSEMBLY - Fin, left	1	
	20730-05		SKIN ASSEMBLY - Fin, right	1	
-3	20730-03		SKIN - Fin, leading edge	1	
-4	21557-00	XY	TIP - Fin	1	
	24896-00	V	TIP - Fin	1	
-5	21837-00		BRACE - Fin, skin	1	
-6	20379-00		FITTING - Antenna attachment, left	1	
	20379-01		FITTING - Antenna attachment, right	1	
-7	20707-02		BRACKET ASSEMBLY - Rudder hinge, upper	1	
	20707-03		BRACKET ASSEMBLY - Rudder hinge, lower	1	
-8	452 347		BEARING - (B-47)	1	
-9	20395-00		PLATE - Antenna mounting cover	2	
-10	20718-02		SPAR ASSEMBLY - Fin, front	1	
-11	20718-03		SPAR ASSEMBLY - Fin, rear	1	
-12	20716-00		BRACKET - Rudder hinge, lower	1	
	20717-00		BRACKET - Rudder hinge, upper	1	
-13	20702-00		RIB ASSEMBLY - Fin, tip	1	
-14	20700-00		RIB - Fin, nose	1	
-15	20698-00		RIB - Fin, nose	1	
-16	20699-00		RIB - Fin, rear	1	
-17	20696-00		RIB - Fin, nose	1	
-18	20697-00		RIB - Fin, rear	1	
-19	20694-00		RIB - Fin, nose	1	
-20	20695-00		RIB - Fin, rear	1	
-21	20691-00		RIB - Fin, nose	1	
-22	20693-00		RIB - Fin, rear	1	
-23	401 266		BOLT - (AN3-5A)	1	
-24	400 444		BOLT - (AN3-6A)	1	
	407 569		WASHER - (AN960-10)	1	

V - Used on PA-24-260 airplanes only.
X - Used on PA-24-180 airplanes only.
Y - Used on PA-24-250 airplanes only.

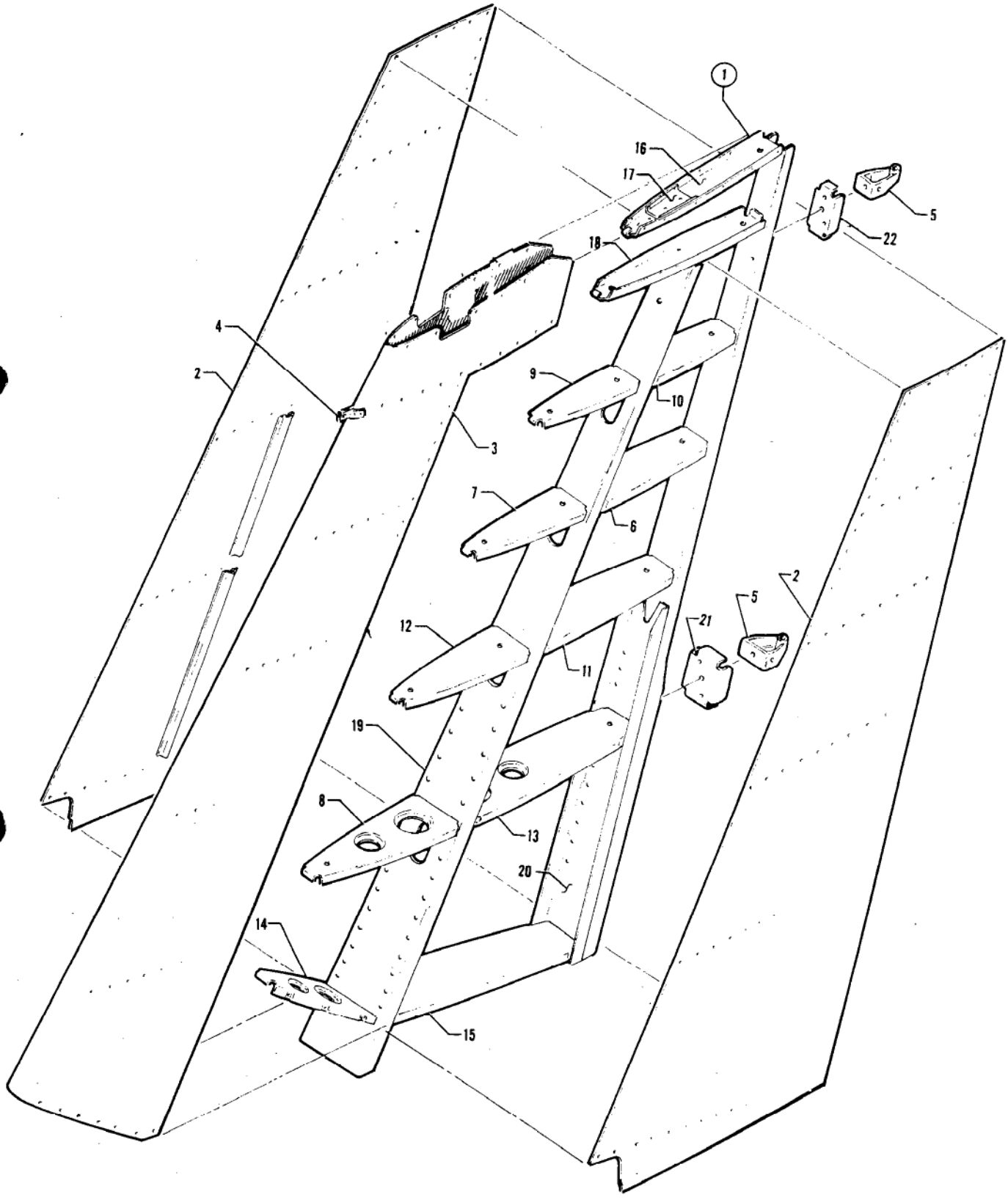

Figure 23G. Fin Assembly "400"

Figure and Index Number	Part Number	Code	NOMENCLATURE	No. Req.	SERIAL NUMBERS AFFECTED
23G-	23446		DRAWING - Fin Assembly		
-1	23446-00		FIN ASSEMBLY	1	
-2	23446-04		SKIN ASSEMBLY - Fin, left	1	
	23446-05		SKIN ASSEMBLY - Fin, right	1	
-3	23446-03		SKIN - Fin, leading edge	1	
-4	20379-00		FITTING - Antenna attachment, LH	1	
	20379-01		FITTING - Antenna attachment, RH	1	
-5	20707-06		BRACKET ASSEMBLY - Rudder hinge, top	1	
	20707-07		BRACKET ASSEMBLY - Rudder hinge, bottom	1	
-6	23414-00		RIB - Fin, rear	1	
-7	23415-00		RIB - Fin, nose	1	
-8	23416-00		RIB - Fin, nose	1	
-9	23417-00		RIB - Fin, nose	1	
-10	23418-00		RIB - Fin, rear	1	
-11	23419-00		RIB - Fin, rear	1	
-12	23420-00		RIB - Fin, nose	1	
-13	23427-00		RIB - Fin, rear	1	
-14	23428-00		RIB - Fin, butt nose	1	
-15	23438-00		RIB - Fin, butt rear	1	
-16	23440-00		RIB ASSEMBLY - Fin tip	1	
-17	23449-00		PLATE - Antenna attachment	1	
-18	23444-00		RIB - Fin, nose	1	
-19	23435-02		SPAR ASSEMBLY - Fin, front	1	
-20	23435-03		SPAR ASSEMBLY - Fin, rear	1	
-21	23431-00		BRACKET - Rudder hinge, lower	1	
-22	23433-00		BRACKET - Rudder hinge, upper	1	

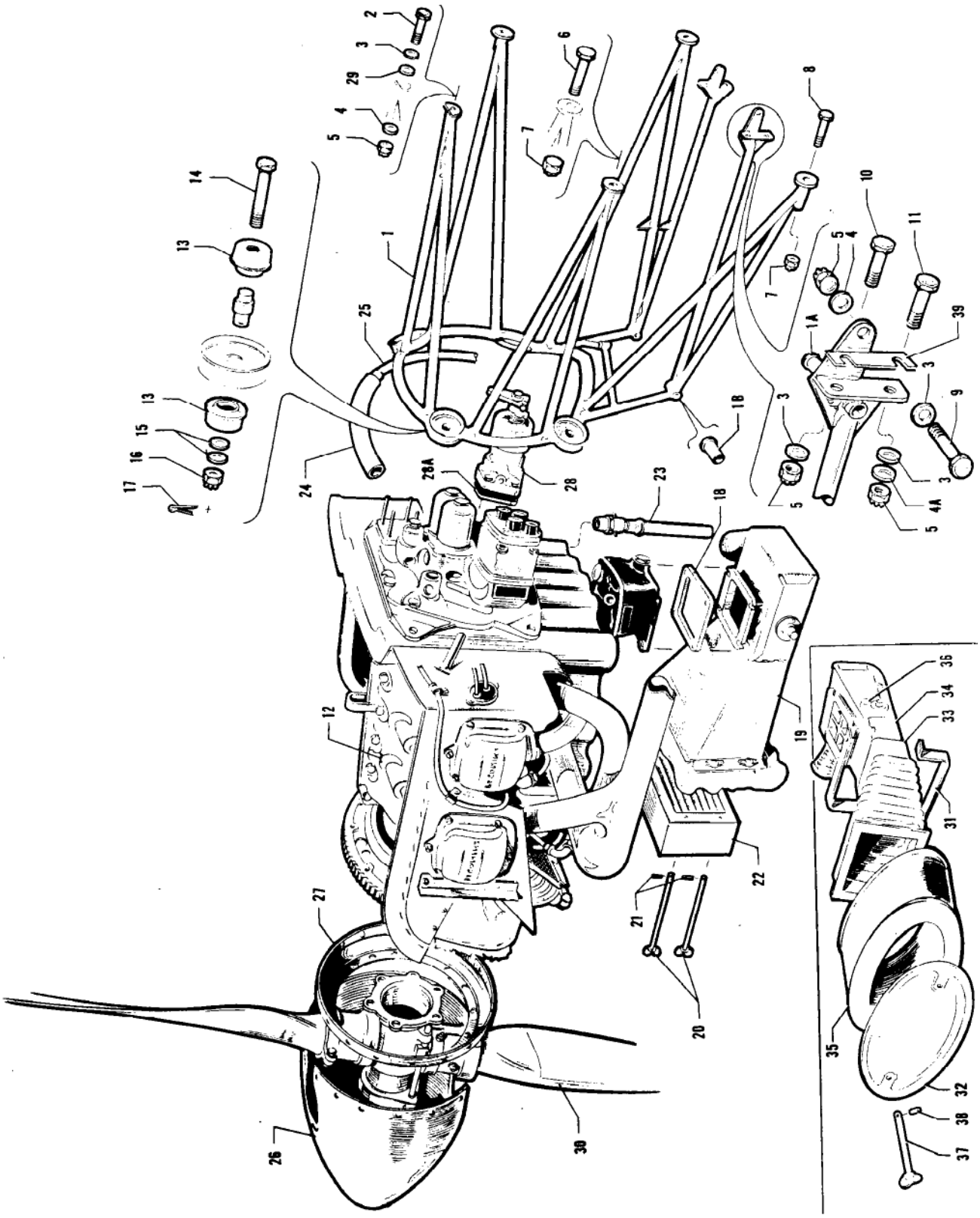

Figure 24. Power Plant Installation

Figure and Index Number	Part Number	Code	NOMENCLATURE	No. Req.	SERIAL NUMBERS AFFECTED
24-	21190		DRAWING - Power Plant Installation		24-1 to 24-1476 inclusive
	22000		DRAWING - Power Plant Installation		24-1477 and up
-1	20796-00		MOUNT ASSEMBLY - Engine	1	24-1 to 24-102 inclusive
	20796-41		MOUNT ASSEMBLY - Engine	1	24-103 to 24-287 inclusive
	20796-42		MOUNT ASSEMBLY - Engine	1	24-288 to 24-1476 inclusive
	21958-00		MOUNT ASSEMBLY - Engine	1	24-1477 to 24-2201 inclusive
	21958-15	C	MOUNT ASSEMBLY - Engine	1	
	21958-21	D	MOUNT ASSEMBLY - Engine	1	
	21958-22		MOUNT ASSEMBLY - Engine	1	24-2563, 24-2588 and up
-1a	20803-00		BUSHING - Shouldered, nose gear drag link mounting	2	
-1b	17164-00		BUSHING - Shouldered, nose gear mounting	2	
-2	400 014	B	BOLT - (AN4-21A)	1	
	400 015	A	BOLT - (AN4-22A)	4	
-3	407 565		WASHER - (AN960-416)	7	
-4	407 585		WASHER - (AN960-416L)	3	
-4a	407 585		WASHER - (AN960-416L) Left	1	
-5	404 888		NUT - (AN365-428)	7	
-6	401 404		BOLT - (AN6-24A)	2	
-7	404 890		NUT - (AN365-624)	4	
-8	401 402		BOLT - (AN6-22A)	2	
-9	400 003		BOLT - (AN4-6A)	2	
-10	400 003		BOLT - (AN4-6A)	2	
-11	400 004		BOLT - (AN4-7A) Left	1	
	400 003		BOLT - (AN4-6A) Right	1	
-12			ENGINE ASSEMBLY - (Lycoming O-360)	1	
-13	475 121		MOUNT ASSEMBLY - Engine shock (J7402-5)	4	
-14	400 274		BOLT - (AN7-35)	4	
-15	407 568		WASHER - (AN960-716)	8	
-16	404 104		NUT - (AN310-7)	4	
-17	424 059		PIN - Cotter (AN380-3-3)	4	
-18	21226-00		PLATE - Carburetor air box seal	1	
-19	21224-00		BOX ASSEMBLY - Carburetor air	1	24-1 to 24-1476 inclusive
-20	487 604		STUD - Air filter	4	24-1 to 24-1476 inclusive
-21	480 650		PIN - Air filter cross	4	24-1 to 24-1476 inclusive
-22	17775-00		FILTER ASSEMBLY - Carburetor air	1	24-1 to 24-1476 inclusive
-23	12956-04		VALVE ASSEMBLY - Oil drain	1	
-24	82371-79	B	HOSE - Flexible	1	
	16633-21	A	HOSE - Flexible	1	
-25	21204-00	B	TUBE - Engine breather	1	
	22089-00	A	TUBE - Engine breather	1	

A - Used on airplanes with serial numbers 24-2175, 24-2299 and up.
B - Used on airplanes with serial numbers 24-1 to 24-2174, 24-2176 and 24-2298.
C - Used on airplanes with serial numbers 24-2202 to 24-2298 inclusive.
D - Used on airplanes with serial numbers 24-2299 to 24-2562 inclusive, 24-2564 to 24-2587 inclusive.

Figure and Index Number	Part Number	Code	NOMENCLATURE	No. Req.	SERIAL NUMBERS AFFECTED
24-26	17884-00	A	SPINNER - Propeller (polished)	1	24-1 to 24-1027 inclusive
	17884-02	A	SPINNER - Propeller (primed)	1	24-1 to 24-1027 inclusive
	16443-00	A	SPINNER - Propeller (primed)	1	24-1028 and up
	21460-00	B	SPINNER - Propeller (primed)	1	24-1 to 24-1007 inclusive
	21884-00	B	SPINNER - Propeller (primed)	1	24-1008 and up
-27	487 248	AC	ADAPTER - Spinner	1	
	21463-00	BD	ADAPTER - Spinner	1	
	16444-00	ABE	ADAPTER - Spinner	1	
-28	21350-08		GOVERNOR ASSEMBLY - Propeller (Woodward)	1	
	16564-05		GOVERNOR ASSEMBLY - Propeller (Hartzell)	1	
-28a	751 833		GASKET - Governor mounting	1	
-29	80122-20		WASHER - Shim (.020)	AR	
-30	450 917	F	PROPELLER ASSEMBLY - Hartzell (HC-92ZK-8D)	1	
	450 972	G	PROPELLER ASSEMBLY - McCauley (2D36C14)	1	
-31	16457-00		STRAP - Carburetor air box boot	2	24-1477 and up
-32	16553-02		COVER - Carburetor air filter	1	24-1477 and up
-33	16559-00		COUPLING - Carburetor air filter	1	24-1477 and up
-34	21943-00		BOX ASSEMBLY - Carburetor air	1	24-1477 to 24-2406 inclusive
	21943-03		BOX ASSEMBLY - Carburetor air	1	24-2407 and up
-35	460 632		FILTER - Carburetor air (CA-161PL)	1	24-1477 and up
-36	460 669		PLUG - (W/H 3152 x 2)	1	24-1477 and up
-37	487 616		STUD - Air filter	2	24-1477 and up
-38	480 650		PIN - Air filter cross	2	24-1477 and up
-39	21820-02		SHIM - Engine mount .016	AR	
	21820-03		SHIM - Engine mount .020	AR	
	21820-04		SHIM - Engine mount .032	AR	

A - Used when Hartzell propeller is installed.
B - Used when McCauley propeller is installed.
C - Used with Hartzell propeller, 24-1 to 24-1027 inclusive.
D - Used with McCauley propeller, 24-1 to 24-1007 inclusive.
E - Used with Hartzell propeller, 24-1028 and up, and with McCauley propeller, 24-1008 and up.
F - Order Kit 754 186 for "O" rings, mounting gasket, mounting bolts, etc.
G - Order Kit 754 187 for "O" rings, mounting gasket, mounting bolts, etc.

When ordering, always specify Part Number, Description and Serial Number of Aircraft

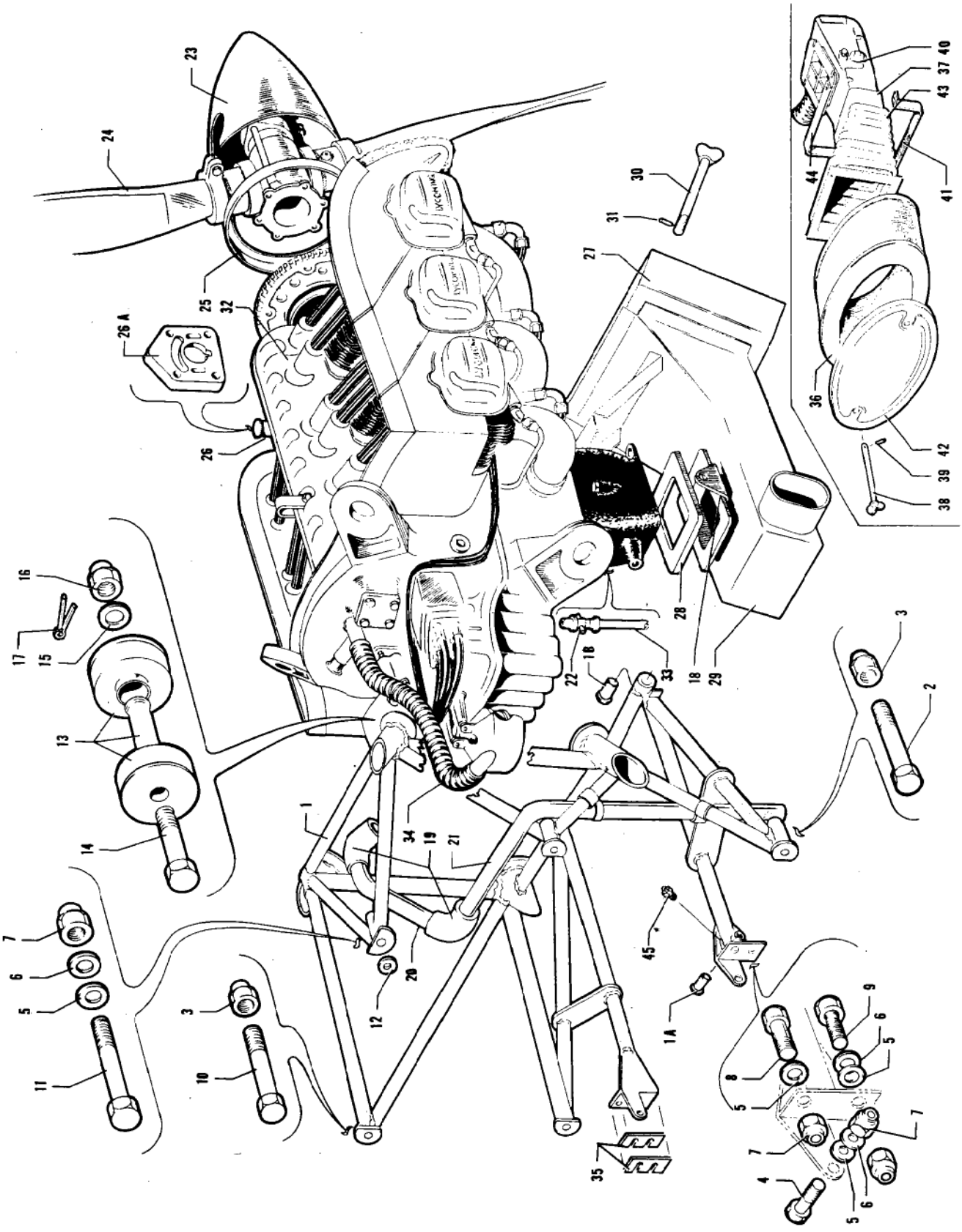

Figure 24A. Power Plant Installation
(PA-24-250 - Serial Nos. 24-103 and up)
(PA-24-260 - Serial Nos. 24-3642, 24-4000 to 24-4782, 24-4784 to 24-4803 inclusive)

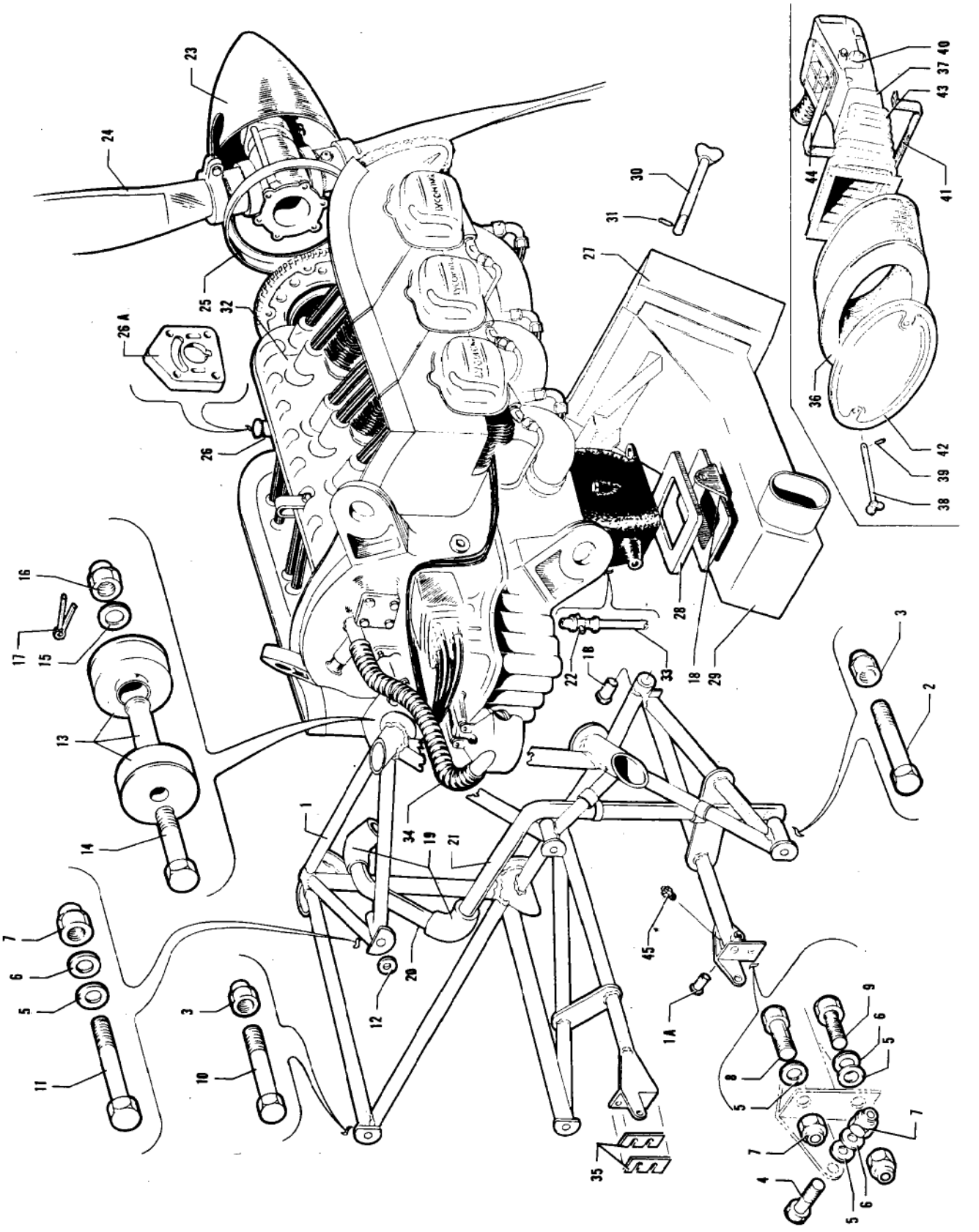

Figure 24A. Power Plant Installation
(PA-24-250 - Serial Nos. 24-103 and up)
(PA-24-260 - Serial Nos. 24-3642, 24-4000 to 24-4782, 24-4784 to 24-4803 inclusive)

Figure and Index Number	Part Number	Code	NOMENCLATURE	No. Req.	SERIAL NUMBERS AFFECTED
24A-	21670	Y	DRAWING - Power Plant Installation		24-103 to 24-1476 inclusive
	21979	DY	DRAWING - Power Plant Installation		
	22028	Y	DRAWING - Power Plant Installation		24-2299 and up
	24919	V	DRAWING - Power Plant Installation		
-1	21497-00	Y	MOUNT ASSEMBLY - Engine	1	24-103 to 24-2201 inclusive
	21497-33	EY	MOUNT ASSEMBLY - Engine	1	
	21497-36	BY	MOUNT ASSEMBLY - Engine	1	
	21497-38	Y	MOUNT ASSEMBLY - Engine	1	24-2563, 24-2588 and up
	24815-00	V	MOUNT ASSEMBLY - Engine	1	
-1a	20803-00		BUSHING - Shouldered, nose gear drag link mounting	2	
-1b	17164-04		BUSHING - Shouldered, nose gear mounting	2	
-2	401 402		BOLT - (AN6-22A)	2	
-3	404 890		NUT - (AN365-624)	4	
-4	400 003		BOLT - (AN4-6A)	2	
-5	407 565		WASHER - (AN960-416)	7	
-6	407 585		WASHER - (AN960-416L)	16	
-7	404 888		NUT - (AN365-416L)	19	
-8	400 003		BOLT - (AN4-6A)	2	24-103 to 24-4394 inclusive
	400 004	V	BOLT - (AN4-7A)	2	24-4395 and up
-9	400 003		BOLT - (AN4-6A) Right	1	24-103 to 24-4394 inclusive
	400 004	V	BOLT - (AN4-7A) Right	1	24-4395 and up
	400 004		BOLT - (AN4-7A) Left	1	
-10	401 404		BOLT - (AN6-24A)	2	
-11	400 014	C	BOLT - (AN4-21A)	1	24-2299 and up
	400 015		BOLT - (AN4-22A)	1	
-12	80122-20		WASHER	AR	
-13	475 122		MOUNT ASSEMBLY - Shock (J-3804-20)	4	
-14	400 268		BOLT - (AN7-27)	4	
-15	407 568		WASHER - (AN960-716)	12	
-16	404 104		NUT - (AN310-7)	4	
-17	424 059		PIN - (AN380-3-3)	4	
-18	21616-00		BRACKET ASSEMBLY - Carburetor heat control	1	24-103 to 24-1476 inclusive
-19	21459-00	Y	ELBOW - Molded	2	
	16633-57	V	HOSE - Oil breather tube	1	
-20	21693-00	CY	TUBE - Oil breather, upper	1	
	22495-00	Y	TUBE - Oil breather, upper	1	24-2299 and up

A - Used on PA-24-250 with serial numbers 24-103 and up, PA-24-260 with serial numbers 24-3642, 24-4000 to 24-4782 inclusive, 24-4784 to 24-4803 inclusive.
B - Used on airplanes with serial numbers 24-2299 to 24-2562 inclusive, 24-2564 to 24-2587 inclusive.
C - Used on airplanes with serial numbers 24-2035, 24-2040 to 24-2174, 24-2176 to 24-2298 inclusive.
D - Used on airplanes with serial numbers 24-1477 to 24-2174, 24-2176 to 24-2298 inclusive.
E - Used on airplanes with serial numbers 24-2202 to 24-2298 inclusive.
V - Used on PA-24-260 airplanes only.
Y - Used on PA-24-250 airplanes only.

When ordering, always specify Part Number, Description and Serial Number of Aircraft

Figure and Index Number	Part Number	Code	NOMENCLATURE	No. Req.	SERIAL NUMBERS AFFECTED
24A-21	21692-00	MY	TUBE - Oil breather, lower	1	
	22088-00	KY	TUBE - Oil breather, lower	1	
	22494-00	Y	TUBE - Oil breather, lower	1	24-2299 and up
	24768-00	V	TUBE - Oil breather	1	
-22	14184-00		VALVE ASSEMBLY - Oil drain	1	
-23	17884-00	LY	SPINNER - Propeller (polished)	1	24-103 to 24-1028 inclusive
	17884-02	LY	SPINNER - Propeller (primed)	1	24-103 to 24-1028 inclusive
	16443-00	LY	SPINNER - Propeller (primed)	1	24-1029 and up
	21460-00	CY	SPINNER - Propeller (primed)	1	24-103 to 24-1023 inclusive
	21884-00	CY	SPINNER - Propeller (primed)	1	24-1024 and up
	25007-00	V	SPINNER - Propeller	1	24-3642, 24-4000 to 24-4246 incl., 24-4248 to 24-4299 inclusive
760452	68713-00	V	SPINNER - Propeller (fiberglas)	1	24-4247, 24-4300 and up
-24	450 973	GY	PROPELLER - McCauley (2D36C28)	1	24-103 to 24-1796 inclusive
	450 924	HY	PROPELLER - Hartzell (HC-A2XK-1)	1	24-103 and up
	450 934	FJV	PROPELLER - Hartzell (HC-C2YK-1A)	1	24-3642, 24-4000 to 24-4371 incl.
	450 913	FJV	PROPELLER - Hartzell (HC-C2YK-1B)	1	24-4372 and up
-25	487 248	BL	ADAPTER - Spinner	1	
	21463-00	CD	ADAPTER - Spinner	1	
	16444-00	EY	ADAPTER - Spinner	1	
	16444-00	V	ADAPTER - Spinner	1	24-3642, 24-4000 to 24-4246 incl., 24-4248 to 24-4299 inclusive
	68734-00	V	ADAPTER - Spinner	1	24-4247, 24-4300 and up
-26	21764-02	LY	GOVERNOR ASSEMBLY - (Woodward)	1	24-103 to 24-1796, 24-1823, 24-1825 and 24-2016 inclusive
	16564-02	LY	GOVERNOR ASSEMBLY - (Hartzell)	1	24-1797 to 24-1822, 24-1824, 24-1826 to 24-2015, 24-2019 and up
	21764-04	CY	GOVERNOR ASSEMBLY - (Woodward)	1	
	24622-05	V	GOVERNOR ASSEMBLY - (Hartzell)	1	24-3642, 24-4000 to 24-4785 incl.
	24622-10	V	GOVERNOR ASSEMBLY - (Hartzell)	1	24-4786 and up
-26a	751 833		GASKET - Governor mounting	1	

A - Used on PA-24-250 with serial numbers 24-103 and up, PA-24-260 with serial numbers 24-3642, 24-4000 to 24-4782 inclusive, 24-4784 to 24-4803 inclusive.
B - Used with Hartzell Propeller, 24-103 to 24-1028.
C - Used when McCauley propeller is installed.
D - Used with McCauley propeller, 24-103 to 24-1023.
E - Used with Hartzell propeller, 24-1029 and up, and used with McCauley propeller, 24-1024 and up.
F - Order Kit 756 892 for "O" Rings, mounting gasket, seals, etc.
G - Order Kit 754 187 for "O" Rings, mounting gasket, mounting bolts, etc.
H - Order Kit 754 218 for "O" Rings, mounting gasket, mounting bolts, etc.
J - See Figure 29C for component parts.
K - Used on airplanes with serial numbers 24-2035, 24-2040 to 24-2174, 24-2176 to 24-2298 inclusive.
L - Used when Hartzell propeller is installed.
M - Used on airplanes with serial numbers 24-103 to 24-2034, 24-2036 to 24-2039 inclusive.
V - Used on PA-24-260 airplanes only.
Y - Used on PA-24-250 airplanes only.

Figure and Index Number	Part Number	Code	NOMENCLATURE	No. Req.	SERIAL NUMBERS AFFECTED
24A-27	17775-02		FILTER ASSEMBLY - Carburetor air	1	24-103 to 24-1476 inclusive
-28	21226-00		PLATE - Carburetor air scoop attachment	1	
-29	21617-00		BOX ASSEMBLY - Carburetor air	1	24-103 to 24-1476 inclusive
-30	487 571		STUD - Carburetor air filter	4	24-103 to 24-1476 inclusive
-31	480 650		PIN - Carburetor air filter	4	24-103 to 24-1476 inclusive
-32		Y	ENGINE ASSEMBLY - Lycoming (O-540-A1A)	1	
		Y	ENGINE ASSEMBLY - Lycoming (O-540-A1A5)	1	
		Y	ENGINE ASSEMBLY - Lycoming (O-540-A1B5)	1	
		Y	ENGINE ASSEMBLY - Lycoming (O-540-A1D5)	1	
		V	ENGINE ASSEMBLY - Lycoming (O-540-E4A5)	1	
-33	13586-54		TUBE - Oil drain	1	
-34	10525-74	B	TUBE - Flexible	1	
	10525-51		TUBE - Flexible	1	24-229 to 24-3080 inclusive
	22502-21		TUBE - Flexible	1	24-3081 and up
-35	21820-02		SHIM - Engine mount .016	AR	
	21820-03		SHIM - Engine mount .020	AR	
	21820-04		SHIM - Engine mount .032	AR	
-36	460 632	C	FILTER - Carburetor (CA-161-PL)	1	24-1477 and up
-37	21943-05	CY	BOX ASSEMBLY - Carburetor	1	24-1477 and up
	21943-05	V	BOX ASSEMBLY - Carburetor	1	24-3642, 24-4000 to 24-4211 incl.
	25269-00	V	BOX ASSEMBLY - Carburetor	1	24-4212 and up
-38	487 616	C	STUD - Carburetor air box (≈W98293-25-3620)	2	24-1477 to 24-4768 inclusive
	400 463		BOLT - Carburetor air box (AN3-40A)	2	24-4769 and up
-39	480 650	C	PIN - Carburetor air box (≈99785-2)	2	24-1477 to 24-4768 inclusive
-40	460 669	CY	PLUG - (W/H 3152 x 2)	1	24-1477 and up
	460 669	V	PLUG - (W/H 3152 x 2)	1	24-3642, 24-4000 to 24-4211 incl.
-41	16457-00	C	STRAP - Carburetor air box boot	2	24-1477 and up
-42	16553-02	C	COVER - Carburetor air filter	1	24-1477 and up
-43	16559-00	C	COUPLING ASSEMBLY - Carburetor air filter	1	24-1477 to 24-4768 inclusive
	25994-00		COUPLING ASSEMBLY - Carburetor air filter	1	24-4769 and up
-44	10525-60		HOSE - Carburetor heat	1	
-45	460 691		FITTING - Lubricator (AN944-101)	2	24-2299 and up

A - Used on PA-24-250 with serial numbers 24-103 and up, PA-24-260 with serial numbers 24-3642, 24-4000 to 24-4782 inclusive, 24-4784 to 24-4803 inclusive.
B - Used on airplanes with serial numbers 24-103 to 24-2174 inclusive, 24-2176 to 24-2298 inclusive.
C - Also used on PA-24-250 with serial numbers 24-103 to 24-1476 inclusive if Carburetor Air Filter Kit 754 285 has been installed.
V - Used on PA-24-260 airplanes only.
Y - Used on PA-24-250 airplanes only.

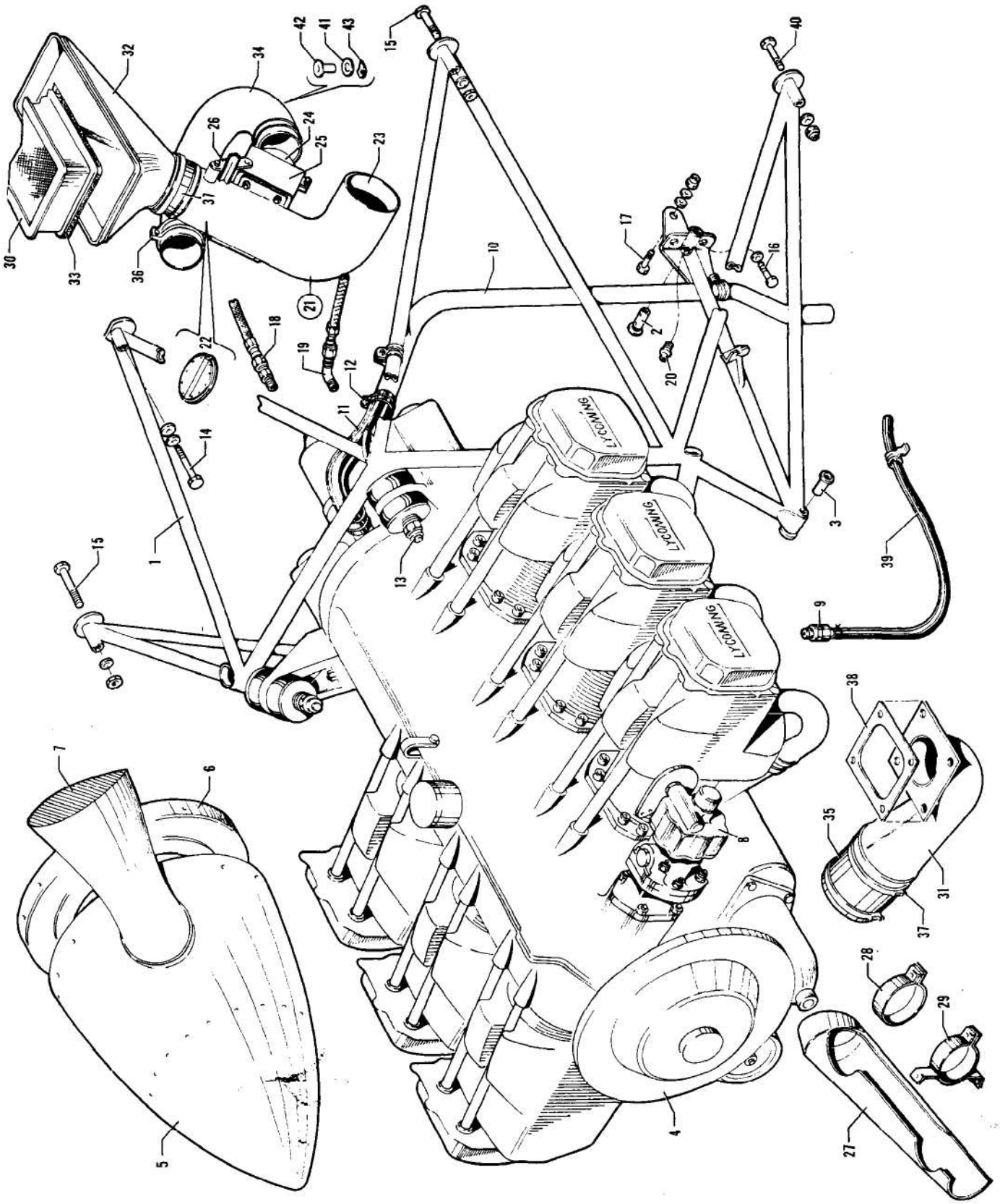

Figure 24B. Power Plant Installation
(Serial Nos. 24-4783, 24-4804 and up)

PILOTEN-SEM...
Strausberg LSA ...

Figure and Index Number	Part Number	Code	NOMENCLATURE	No. Req.	SERIAL NUMBERS AFFECTED
24B-	26315		DRAWING - Power Plant Installation		
	26533		DRAWING - Air Induction System Installation		
-1	26619-00		MOUNTING ASSEMBLY - Engine	1	
-2	20803-00		BUSHING - Shoulder, nose gear drag link mounting	2	
-3	17164-04		BUSHING - Shoulder, nose gear mounting	2	
-4			ENGINE ASSEMBLY - Lycoming (IO-540)	1	
-5	26326-00		SPINNER ASSEMBLY - Propeller	1	
-6	26313-00		ADAPTER - Spinner	1	
-7	550 926	C	PROPELLER - Hartzell (HC-E2YR-1BF/F8467-7R)	1	
	550 927	BC	PROPELLER - Hartzell (HC-E2YR-1BF/F8467-7R)	1	
-8	24622-10		GOVERNOR ASSEMBLY - (Hartzell)	1	
-9	14184-00		VALVE ASSEMBLY - Oil drain	1	
-10	26843-00		TUBE - Oil breather	1	
-11	29997-02		HOSE - Oil breather	1	
-12	454 803		CLAMP - (#H1-3800)	2	
-13	400 268		BOLT - (AN7-27)	4	
	475 105		MOUNT ASSEMBLY - Shock (#J-3804-30)	4	
	424 059		PIN - (AN380-3-3)	4	
	407 568		WASHER - (AN960-716)	12	
	404 104		NUT - (AN310-7)	4	
-14	400 015		BOLT - (AN4-22A)	1	
	407 565		WASHER - (AN960-416)	1	
	407 585		WASHER - (AN960-416L)	1	
	80122-20		WASHER	AR	
-15	401 404		BOLT - (AN6-24A)	2	
	407 567		WASHER - (AN960-616)	2	
	404 890		NUT - (MS20365-624C)	2	
-16	400 004		BOLT - (AN4-7A)	4	
	407 565		WASHER - (AN960-416)	4	
-17	400 003		BOLT - (AN4-6A)	2	
	407 565		WASHER - (AN960-416)	2	
	407 585		WASHER - (AN960-416L)	2	
	404 880		NUT - (MS20365-428C)	2	
-18	476 664		NIPPLE - (AN816-8D)	1	
	458 886	B	ELBOW - (AN823-8D)	1	
-19	458 886		ELBOW - (AN823-8D)	1	
-20	460 691		FITTING - (AN944-101)	2	
-21	26982-00	A	VALVE ASSEMBLY - Air induction (complete)	1	
-22	26222-00	A	VALVE ASSEMBLY - Air induction	1	
-23	26973-00	A	TUBE ASSEMBLY - Air induction	1	
-24	26980-00	A	TUBE ASSEMBLY - Alternate air take-off	1	
-25	26981-00	A	BOX ASSEMBLY - Alternate air	1	
-26	32343-00	A	ARM ASSEMBLY - Control valve	1	

A - Not used if RaJay Turbocharger is installed. Refer to Figure 24G or RaJay Corporation Parts Catalog for component parts.
B - Used if RaJay Turbocharger is installed.
C - See Figure 29C for component parts.

When ordering, always specify Part Number, Description and Serial Number of Aircraft

Figure and Index Number	Part Number	Code	NOMENCLATURE	No. Req.	SERIAL NUMBERS AFFECTED
24B-27	26928-00	A	BAFFLE ASSEMBLY - Exhaust stack	1	
-28	26925-00	A	CLAMP ASSEMBLY - Air induction	1	
-29	26926-00	A	CLAMP ASSEMBLY - Air induction	1	
-30	26874-00		FILTER ASSEMBLY - Air induction (#P11-4419)	1	
-31	26869-00	A	TUBE ASSEMBLY - Air induction	1	
-32	26846-00	A	DUCT ASSEMBLY - Air filter outlet	1	
-33	26835-00	A	GASKET - Air filter outlet	1	
-34	22502-00	A	HOSE - Air duct	1	
-35	42172-04	A	HOSE - Air valve coupling	2	
-36	454 993		CLAMP - (#H3-1160)	2	
-37	554 911		CLAMP - (#GS4)	4	
-38	21226-00		PLATE - Fuel injector, air induction attachment	1	
-39	13586-54	A	TUBE - Oil drain	1	
-40	401 403		BOLT - (AN6-23A)	2	
	407 567		WASHER - (AN960-616)	2	
	404 890		NUT - (MS20365-624C)	2	
-41	19513-93		WASHER - Hose drain	1	
-42	459 961		EYELET - Hose drain (#A2080)	1	
-43	406 417		NUT - (#A390-017-1)	1	

A - Not used if RaJay Turbocharger is installed. Refer to Figure 24G or RaJay Corporation Parts Catalog for component parts.

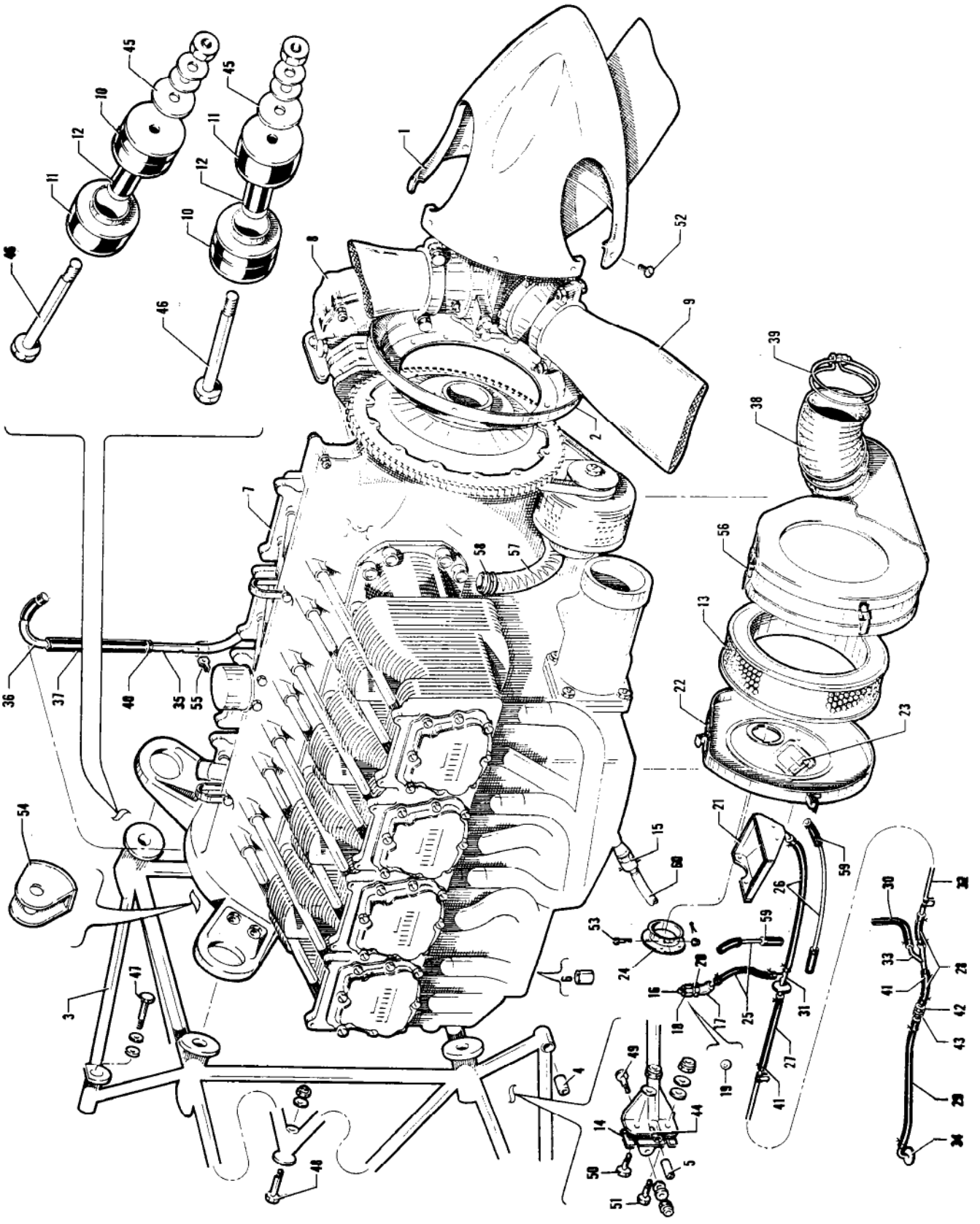

Figure 24C. Power Plant "400"

Figure and Index Number	Part Number	Code	NOMENCLATURE	No. Req.	SERIAL NUMBERS AFFECTED
24C-	24555		DRAWING - Power Plant Installation		
-1	22752-00		SPINNER - Propeller	1	
-2	22774-00		BULKHEAD - Spinner	1	
-3	22918-00		MOUNT ASSEMBLY - Engine	1	
-4	17164-04		BUSHING - Shouldered, nose gear mounting	2	
-5	20803-02		BUSHING - Shouldered, drag link mounting	2	
-6	80012-77		BUSHING - Nose wheel steering arm	1	
-7			ENGINE ASSEMBLY - Lycoming (10-720-A1A)	1	
-8	24622-02		GOVERNOR ASSEMBLY - Hartzell	1	
-9	450 932	A	PROPELLER - Hartzell (HC-A3VK-4)	1	
-10	475 112		MOUNT ASSEMBLY - Top front and bottom rear (J7763-23)	4	
-11	475 117		MOUNT ASSEMBLY - Top rear and bottom front (J9612-8)	4	
-12	487 440		SPACER - Mount assembly, left (Y6769-22)	2	
	487 436		SPACER - Mount assembly, right (J7766-9)	2	
-13	460 628		FILTER ASSEMBLY - Engine air (CA-173PL)	1	
-14	21820-04		SHIM - Engine mount .032	AR	
-15	14184-00		VALVE ASSEMBLY - Oil drain	1	
-16	23007-00		VALVE ASSEMBLY - Automatic fuel drain	1	
-17	23006-00		ELBOW	1	
-18	451 854		ADAPTER - (W/H 3200 x 2)	1	
-19	452 028		BALL BEARING - (MS19059-11)	1	
-20	477 677		NUT - Tru-seal	1	
-21	24480-00		BRACKET ASSEMBLY - Air filter	1	
-22	24569-00		PLATE ASSEMBLY - Air filter box	1	
-23	23809-10		DOOR ASSEMBLY - Alternate air	1	
-24	24570-00		CLAMP ASSEMBLY - Air filter box	2	
-25	16633-50		HOSE - Flexible, fuel drain, 11" L	1	26-2 to 26-124 inclusive
	24602-03		TUBE - Fuel drain connector, 8 1/16" L	1	26-125 and up
-26	16633-51		HOSE - Flexible, fuel drain, 17" L	1	26-2 to 26-124 inclusive
	24602-02		TUBE - Fuel drain connector, 14 1/16" L	1	26-125 and up
-27	16633-52		HOSE - Flexible, fuel drain, 5-1/2" L	1	
-28	61541-27		HOSE - Flexible, fuel drain, 2-3/4" L	2	
-29	61541-33		HOSE - Flexible, fuel drain, 8-1/2" L	1	
-30	61541-34		HOSE - Flexible, fuel drain, 27" L	1	
-31	24603-00		TUBE ASSEMBLY - Drain connector	1	
-32	24602-00		TUBE - Drain connector	1	
-33	16632-00		TUBE ASSEMBLY - Drain connector	1	
-34	24623-00		TUBE ASSEMBLY - Drain connector	1	
-35	24548-00		TUBE - Oil breather	1	
-36	24549-00		TUBE - Breather hose liner	1	
-37	16633-53		HOSE - Flexible, oil breather, 24" L	1	
-38	22502-51		HOSE - Air duct	1	
-39	454 816		CLAMP - Air duct hose (#H4.0000)	2	
-40	554 817		CLAMP - Oil breather hose (#H-1-5800)	2	
-41	454 983		CLAMP - Fuel drain hose (SAE #8)	18	
-42	477 618		NUT - (AN924-4D)	1	
-43	455 274		CONNECTOR - (AN849-4D)	1	
-44	460 691		FITTING - Lubricating (AN944-101)	2	
-45	85012-101		WASHER - Mount to engine	4	
			A - Order Kit 756 792 for "O" rings, mounting gasket, mounting bolts, etc.		

When ordering, always specify Part Number, Description and Serial Number of Aircraft

Figure and Index Number	Part Number	Code	NOMENCLATURE	No. Req.	SERIAL NUMBERS AFFECTED
24C-46	401 538		BOLT - (AN7-37A) Mount to engine	4	
	407 568		WASHER - (AN960-716) Mount to engine	4	
	477 664		NUT - (#32FL-720) Mount to engine	4	
-47	400 014		BOLT - (AN4-21A)	1	
	407 565		WASHER - (AN960-416)	1	
	407 585		WASHER - (AN960-416L)	1	
	80122-20		WASHER	AR	
-48	401 405		BOLT - (AN6-25A)	4	
	407 567		WASHER - (AN960-616)	4	
	404 890		NUT - (MS20365-624C)	4	
-49	400 003		BOLT - (AN4-6A)	2	
	407 565		WASHER - (AN960-416)	2	
	407 585		WASHER - (AN960-416L)	2	
	404 888		NUT - (MS20365-428C)	2	
-50	400 003		BOLT - (AN4-6A)	2	
	407 565		WASHER - (AN960-416)	2	
	404 888		NUT - (MS20365-428C)	2	
51	400 003		BOLT - (AN4-6A) Right	1	
	400 004		BOLT - (AN4-7A) Left	1	
	407 565		WASHER - (AN960-416)	2	
	407 585		WASHER - (AN960-416L) Left	1	
	404 888		NUT - (MS20365-428C)	2	
-52	416 995		SCREW - (AN526-1032R8)	9	
-53	400 063		BOLT - (AN3-20)	2	
	404 100		NUT - (AN310-3)	2	
	424 051		PIN - Cotter (AN380-2-2)	2	
-54	24754-00		SHIELD ASSEMBLY - Heat	1	
-55	24873-00		LINK - Clamp connector	1	
-56	24568-00		BOX ASSEMBLY - Engine air induction	1	
-57	22502-53		HOSE - Alternator cooling	1	
-58	454 997		CLAMP - Alternator cooling hose	2	
-59	16633-37		HOSE - Flexible, fuel drain, 2" L	4	26-125 and up
-60	13586-54		TUBE - Oil drain	1	

When ordering, always specify Part Number, Description and Serial Number of Aircraft

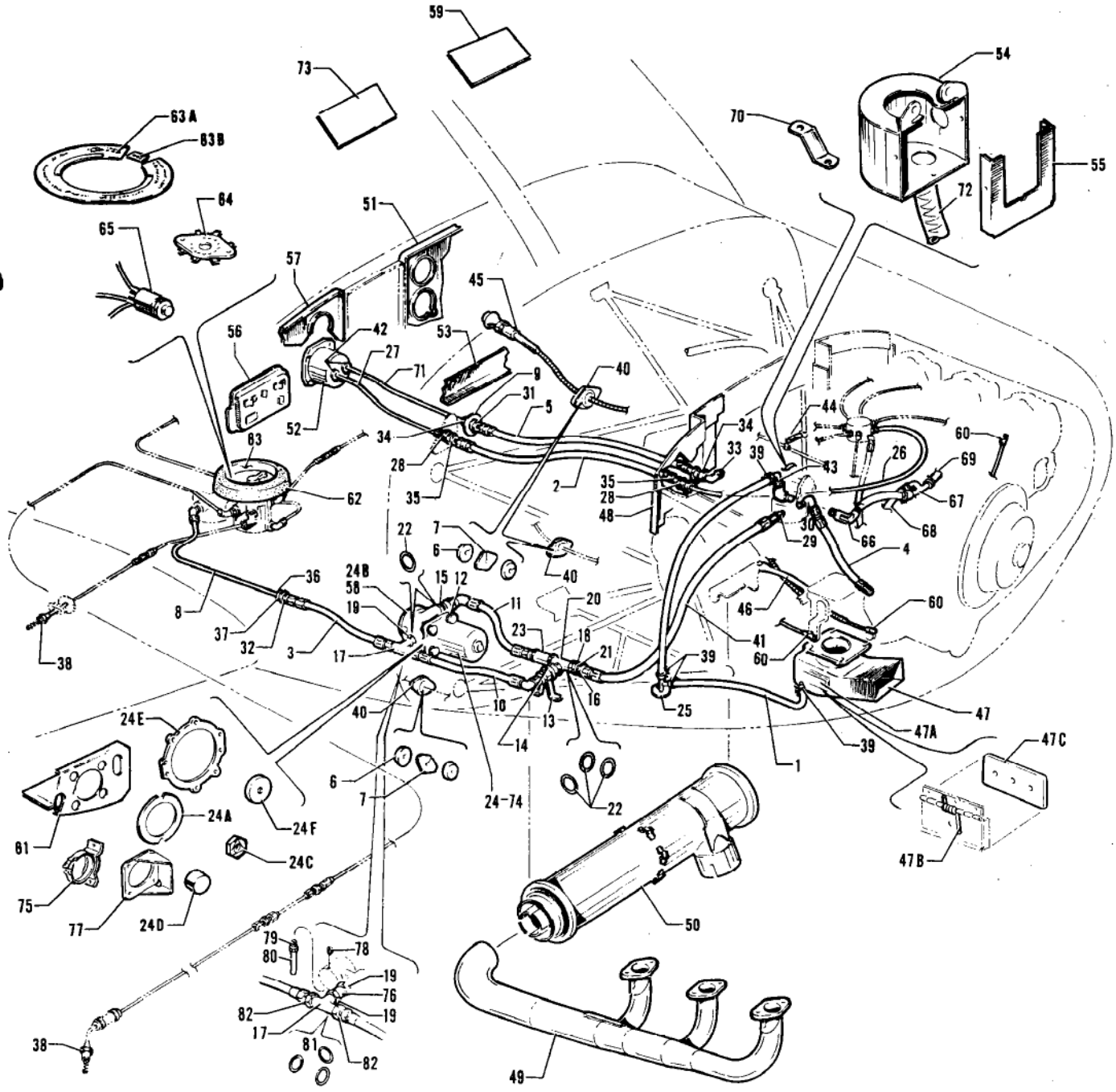

Figure 24D. Power Plant "250" Fuel Injection

Figure and Index Number	Part Number	Code	NOMENCLATURE	No. Req.	SERIAL NUMBERS AFFECTED
24D-	23144		DRAWING - Power Plant Installation		
	23104		DRAWING - Engine Controls Installation		
	23118		DRAWING - Fuel System Installation		
	23174		DRAWING - Fuel Pump Installation (Bendix)		
	27232		DRAWING - Fuel Pump Installation (Dukes)		
-1	16633-36		HOSE - Air induction box drain, 20-1/2" L	1	24-3205 to 24-3656 inclusive
	16633-56		HOSE - Air induction box drain, 17-1/2" L	1	24-3657 and up
-2	17766-41		HOSE ASSEMBLY - Fuel	1	
-3	17766-63		HOSE ASSEMBLY - Fuel	1	
-4	17766-68		HOSE ASSEMBLY - Fuel	1	
-5	17766-69		HOSE ASSEMBLY - Fuel	1	
-6	22104-10		GROMMET - Firewall seal	2	
-7	22105-08		GASKET - Firewall seal	1	
-8	23070-00		LINE ASSEMBLY - Fuel	1	
-9	23081-00		PLACARD - Firewall	1	
-10	17766-61		HOSE ASSEMBLY - Fuel	1	
-11	17766-64		HOSE ASSEMBLY - Fuel	1	
-12	19513-47		WASHER	4	
-13	21328-05		BRACKET - Check valve	1	
-14	80032-95		CLAMP	1	
-15	491 052		UNION - (AN815-6D)	1	
-16	491 066		UNION - (AN832-6)	1	
-17	488 471	A	TEE - (AN834-6D)	1	
	488 472	B	TEE - (AN938-D6)	1	
-18	477 631		NUT - (AN924-6)	1	
-19	477 620	A	NUT - (AN924-6D)	1	
	477 620	B	NUT - (AN924-6D)	2	
-20	488 472		TEE - (AN938-D6)	1	
-21	407 570		WASHER - (AN960-916)	1	
-22	462 060		GASKET - (MS29512-6)	5	
-23	492 072		VALVE - Check (K1332-6-10)	2	
-24	481 686	C	PUMP ASSEMBLY - (480 528) Bendix	1	
-24a	751 868		GASKET - Pump motor (478 484)	1	
-24b	753 637		MOTOR - CCW-12 Volt (479 272)	1	
-24c	752 492		NUT - Lock #10-32 (478 483)	2	
-24d	753 869		COUPLING - Shaft (478 486)	1	
-24e	751 917		GASKET - Pump (478 504)	1	
-24f	757 576		SEAL ASSEMBLY - Shaft (479 509)	1	

A - Used when Bendix Pump Assembly is installed.
B - Used when Dukes Pump Assembly is installed.
C - If Dukes Pump (#4140-00-218) has been installed, order Part No. 481 740.

When ordering, always specify Part Number, Description and Serial Number of Aircraft

Figure and Index Number	Part Number	Code	NOMENCLATURE	No. Req.	SERIAL NUMBERS AFFECTED
24D-25	23194-00		TUBE ASSEMBLY - Drain connector	1	
-26	23195-02		TUBE ASSEMBLY - Fuel	1	
-27	23195-10		TUBE ASSEMBLY - Fuel	1	
-28	23319-00		UNION	2	
-29	476 678		NIPPLE - (AN816-6)	1	
-30	458 871		ELBOW - (AN823-6)	1	
-31	491 064		UNION - (AN832-2)	1	
-32	491 062		UNION - (AN832-6D)	1	
-33	458 876		ELBOW - (AN833-2D)	1	
-34	477 619		NUT - (AN924-2D)	2	
-35	477 617		NUT - (AN924-3D)	2	
-36	477 620		NUT - (AN924-6D)	1	
-37	407 570		WASHER - (AN960-916)	1	
-38	454 921		CLAMP - (QS100-M10)	4	
-39	454 983		CLAMP - (#8)	7	
-40	481 062		HOLDER - Grommet (MT340)	6	
-41	489 724		TUBE ASSEMBLY - Fuel (SR2800-6-0274)	1	
-42	476 649		NIPPLE - (AN816-2D)	2	
-43	23333-00		VALVE ASSEMBLY - Check	1	
-44	14843-70		BUSHING	1	
-45	22633-03		CONTROL ASSEMBLY - Mixture	1	
-46	23296-00		BRACKET ASSEMBLY - Mixture control support	1	
-47	23114-00		BOX ASSEMBLY - Engine air induction	1	
-47a	31207-02		DOOR ASSEMBLY - Alternate air	1	
-47b	23097-00		SPRING - Alternate air door	1	
-47c	23094-00		SEAL - Alternate air door	1	
-48	23077-00		BAFFLE ASSEMBLY - Engine right rear	1	
-49	23537-03		STACK ASSEMBLY - Engine exhaust, right	1	
	21664-02		STACK ASSEMBLY - Engine exhaust, left	1	
-50	23159-00	C	MUFFLER ASSEMBLY	1	24-3205 to 24-3557 inclusive
	26385-00		MUFFLER ASSEMBLY	1	24-3558 and up
-51	22725-04		PANEL - Cover "250"	1	
-52	22739-00		GAUGE ASSEMBLY - Fuel flow	1	
-53	22660-05		PANEL - Instrument panel placard "250"	1	24-3205 to 24-3284 inclusive
	22660-09		PANEL - Instrument panel placard "250"	1	24-3285 and up
-54	23300-00	B	BAFFLE ASSEMBLY - Fuel pump	1	
	24558-00		BAFFLE ASSEMBLY - Fuel pump	1	24-3586, 24-3596 and up
-55	23304-00		COVER - Fuel pump baffle	1	
-56	23215-03		CLUSTER ASSEMBLY - Instrument "250"	1	
	22625-03	A	CLUSTER ASSEMBLY - Instrument "250"	1	
-57	23218-00		PANEL - Cover "250"	1	
	22732-02	A	PANEL - Cover "250"	1	
-58	470 660		KIT - Fuel pump attachment	1	
-59	23345-00		PLACARD - Starting instructions	1	

A - Used when cylinder head temperature gauge is installed.
B - Used on airplanes with serial numbers 24-3205 to 24-3585 inclusive, 24-3587 to 24-3595 inclusive.
C - Not available. 26385-00 hollow type muffler will be supplied as a replacement. When this replacement is made, it will be necessary to comply with Service Letter No. 431.

When ordering, always specify Part Number, Description and Serial Number of Aircraft

Figure and Index Number	Part Number	Code	NOMENCLATURE	No. Req.	SERIAL NUMBERS AFFECTED
24D-60	19987-00		JOINT ASSEMBLY - Ball (469 137) (Mixture, throttle and governor control)	3	
-61	23073-00		BRACKET ASSEMBLY - Fuel pump support	1	
-62	22828-08		PLATE ASSEMBLY - Fuel valve protector, dark green	1	
-63	22790-03		PLATE - Fuel valve protector, dark green	1	
-63a	24970-00		PLACARD - Fuel control	1	
-63b	24981-00		PLACARD - Fuel	1	
-64	22843-00		SWITCH ASSEMBLY	1	
-65	487 842		SWITCH - (#923D)	4	
-66	23798-00	B	ELBOW - Vent	1	
-67	16632-00	B	CONNECTOR TUBE - Vent	1	
-68	16633-39	B	HOSE - Vent	2	
-69	82371-80	B	HOSE - Vent	1	
	82371-84		HOSE - Vent	1	24-3586, 24-3596 and up
-70	23812-00		BRACKET - Fuel pump baffle support	1	
-71	23195-04		TUBE ASSEMBLY - Fuel	1	
-72	22502-04		TUBE - Fuel pump baffle, air	1	
-73	24985-00		PLACARD - Check list	1	
-74	481 740		PUMP ASSEMBLY - (#4140-00-218) Dukes	1	
-75	27224-00	A	CLAMP ASSEMBLY - Fuel pump mounting	1	
-76	491 062	A	UNION - (AN832-6D)	1	
-77	27223-00	A	BRACKET ASSEMBLY - Fuel pump support	1	
-78	581 783	A	PLUG - (AN932-D1)	1	
-79	451 909	A	ADAPTER - (#2140-52)	1	
-80	22369-14	A	TUBE - Plastic	1	
-81	462 060	A	GASKET - (MS29512-6)	3	
-82	491 052	A	UNION - (AN815-6D)	2	

A - Used when Dukes Pump Assembly is installed.
B - Used on airplanes with serial numbers 24-3205 to 24-3585 inclusive, 24-3587 to 24-3595 inclusive.

When ordering, always specify Part Number, Description and Serial Number of Aircraft

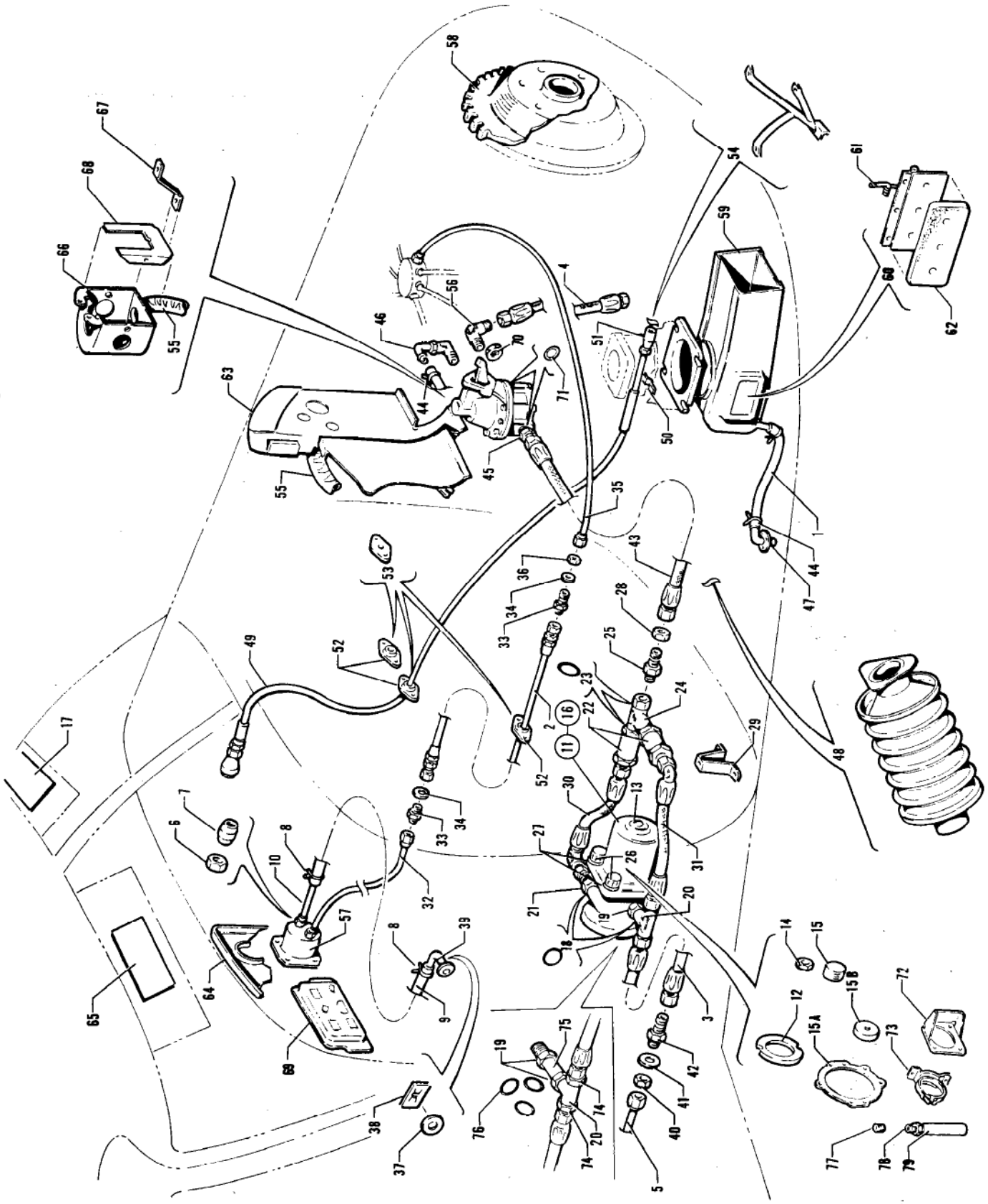

Figure 24E. Power Plant "260" Fuel Injection
(Serial Nos. 24-3642, 24-4000 to 24-4782, 24-4784 to 24-4803 inclusive)

Figure and Index Number	Part Number	Code	NOMENCLATURE	No. Req.	SERIAL NUMBERS AFFECTED
24E-	24923		DRAWING - Power Plant Installation		
	23104		DRAWING - Engine Controls Installation		24-3642, 24-4000 to 24-4246 incl., 24-4248 to 24-4299 inclusive
	25581		DRAWING - Engine Controls Installation		24-4247, 24-4300 and up
	24927		DRAWING - Fuel System Installation		
	24906		DRAWING - Fuel Pump Installation (Bendix)		
	27232		DRAWING - Fuel Pump Installation (Dukes)		
	24929		DRAWING - System Installation, Auxiliary Fuel		
-1	16633-56		HOSE - Air induction box drain (17 1/2 L)	1	
-2	17766-41		HOSE ASSEMBLY - Fuel	1	
-3	17766-63		HOSE ASSEMBLY - Fuel	1	
-4	17766-68		HOSE ASSEMBLY - Fuel	1	
-5	23070-00		FUEL LINE ASSEMBLY	1	
-6	477 635		NUT - (W/H #61 x 3)	1	
-7	486 907		SLEEVE - (W/H #60 x 3)	1	
-8	454 833		CLAMP - Hose (SAE #6-Type E)	2	
-9	83161-31	C	HOSE - Fuel flow gauge	1	
	83161-03	B	HOSE - Fuel flow gauge	1	
-10	13541-04	C	TUBING - Fuel flow gauge	1	
	26342-00	B	TUBING - Fuel flow gauge	1	
-11	481 686	F	PUMP ASSEMBLY - (480 528) Bendix	1	
-12	751 868		GASKET - Pump motor (478 484)	1	
-13	753 637		MOTOR - CCW-12 Volt (479 272)	1	
-14	752 492		NUT - Lock #10-32 (478 483)	1	
-15	753 869		COUPLING - Shaft (478 486)	1	
-15a	751 917		GASKET - Pump (478 504)	1	
-15b	757 576		SEAL ASSEMBLY - Shaft (479 509)	1	
-16	481 740		PUMP ASSEMBLY - (#4140-00-218) Dukes	1	
-17	31391-00		PLACARD - Engine starting instructions	1	
-18	462 060		GASKET - (MS29512-6)	2	
-19	477 620	D	NUT - (AN924-6D)	1	
	477 620	E	NUT - (AN924-6D)	2	
-20	488 471	D	TEE - (AN834-6D)	1	
	488 472	E	TEE - (AN938-D6)	1	
-21	491 052		UNION - (AN815-6D)	1	
-22	492 072		VALVE - Check (K1332-6-10)	2	
-23	462 060		GASKET - Check valve (MS29512-6)	3	
-24	488 472		TEE - (AN938-D6)	1	
-25	491 066		UNION - (AN832-6)	1	

A - Used on airplanes with serial numbers 24-3642, 24-4000 to 24-4782, 24-4784 to 24-4803 inclusive.
B - Used on airplanes with serial numbers 24-4660, 24-4669, 24-4671, 24-4709, 24-4720 to 24-4782 inclusive, 24-4784 to 24-4803 inclusive.
C - Used on airplanes with serial numbers 24-3642, 24-4000 to 24-4659, 24-4661 to 24-4670, 24-4672 to 24-4698, 24-4700 to 24-4708, and 24-4710 to 24-4719 inclusive.
D - Used when Bendix Pump Assembly is installed.
E - Used when Dukes Pump Assembly is installed.
F - If Dukes Pump Assembly (#4140-00-218) has been installed, order Part No. 481 740.

Figure and Index Number	Part Number	Code	NOMENCLATURE	No. Req.	SERIAL NUMBERS AFFECTED
24E-26	470 660		KIT ASSEMBLY - Fuel pump mounting (479 224)	1	
-27	19513-47		WASHER - Fuel pump mounting	4	
-28	477 631		NUT - (AN924-6)	1	
-29	21328-05		BRACKET - Check valve	1	
-30	17766-64		HOSE ASSEMBLY - Pump	1	
-31	17766-61		HOSE ASSEMBLY - Pump	1	
-32	23195-10		FUEL LINE ASSEMBLY	1	
-33	23319-00		UNION - Fuel line	2	
-34	407 567		WASHER - (AN960-616)	2	
-35	23195-02		FUEL LINE ASSEMBLY	1	
-36	477 617		NUT - (AN924-3D)	2	
-37	85012-51		WASHER - Static vent	1	
-38	406 391		NUT - Static vent (#A871-012-1)	1	
-39	23558-00		FITTING - Static vent	1	
-40	479 620		NUT - Fuel line (AN924-6D)	1	
-41	407 570		WASHER - Fuel line (AN960-916)	1	
-42	491 062		UNION - Fuel line (AN832-6D)	1	
-43	489 724		TUBE ASSEMBLY - (#SR2800-6-0274)	1	
-44	454 983		CLAMP - Hose (SAE #8 Type E)	4	
-45	476 678	D	NIPPLE - (AN816-6)	1	
	491 056	B	UNION - (AN815-6)	1	
-46	23333-00		VALVE ASSEMBLY - Check	1	
-47	24623-00		TUBE ASSEMBLY - Drain connector	1	
-48	26345-06		MUFFLER ASSEMBLY - Right	1	
	26345-05		MUFFLER ASSEMBLY - Left	1	
-49	22633-03		CABLE ASSEMBLY - Mixture control	1	
-50	18219-02		LUG - Mixture control cable	1	
-51	31747-00		JOINT ASSEMBLY - Mixture and throttle control	2	
-52	22104-03		GROMMET	4	
-53	22105-03		GASKET - Mixture and governor control	3	
-54	23296-00		BRACKET ASSEMBLY - Mixture control support	1	
-55	22502-61		TUBE - Baffle installation	1	
-56	458 871	D	ELBOW - (AN823-6)	1	
	458 864	B	ELBOW - (AN837-6)	1	
-57	25144-00		GAUGE ASSEMBLY - Fuel flow	1	
-58			ENGINE ASSEMBLY - Lycoming (IO-540-D4A5)	1	
-59	23114-08		BOX ASSEMBLY - Engine air induction	1	
-60	31207-00		DOOR ASSEMBLY - Alternate air	1	
-61	24582-00		SPRING - Alternate air door	1	
-62	23094-00		SEAL - Alternate air door	1	
-63	21596-09		BAFFLE ASSEMBLY - Engine, left rear	1	
-64	24887-03		PANEL - Cover, right	1	24-3642, 24-4000 to 24-4246 incl., 24-4248 to 24-4299 inclusive
	25555-07	E	PANEL - Cover, right	1	
	25555-03	CE	PANEL - Cover, right	1	

A - Used on airplanes with serial numbers 24-3642, 24-4000 to 24-4782, 24-4784 to 24-4803 inclusive.
B - Used when engine fuel pump A. C. #6440296 is installed.
C - Used when cylinder head temperature gauge is installed.
D - Used when engine fuel pump A. C. #5656999 is installed.
E - Used on airplanes with serial numbers 24-4247, 24-4300 to 24-4782, 24-4784 to 24-4803 inclusive.

When ordering, always specify Part Number, Description and Serial Number of Aircraft

Figure and Index Number	Part Number	Code	NOMENCLATURE	No. Req.	SERIAL NUMBERS AFFECTED
24E-65	24985-00		PLACARD - Check list	1	
-66	24558-00		BAFFLE ASSEMBLY - Fuel pump	1	
-67	23812-00		LUG - Baffle assembly	1	
-68	23304-00		COVER - Baffle assembly	1	
-69	23215-05		CLUSTER ASSEMBLY - Instrument	1	
	23215-07	C	CLUSTER ASSEMBLY - Instrument	1	
-70	477 631	B	NUT - (AN924-6)	1	
-71	462 060	B	GASKET - (MS29512-6)	2	
-72	27223-00	D	BRACKET ASSEMBLY - Fuel pump support	1	
-73	27224-00	D	CLAMP ASSEMBLY - Fuel pump mounting	1	
-74	491 052	D	UNION - (AN815-6D)	2	
-75	491 062	D	UNION - (AN832-6D)	1	
-76	462 060	D	GASKET - (MS29512-6)	3	
-77	581 783	D	PLUG - (AN932-D1)	1	
-78	451 909	D	ADAPTER - (#2140-52)	1	
-79	22369-14	D	TUBE - Plastic	1	

A - Used on airplanes with serial numbers 24-3642, 24-4000 to 24-4782 inclusive, 24-4784 to 24-4803 inclusive.
B - Used when engine fuel pump A. C. #6440296 is installed.
C - Used when cylinder head temperature gauge is installed.
D - Used when Dukes Pump Assembly is installed.

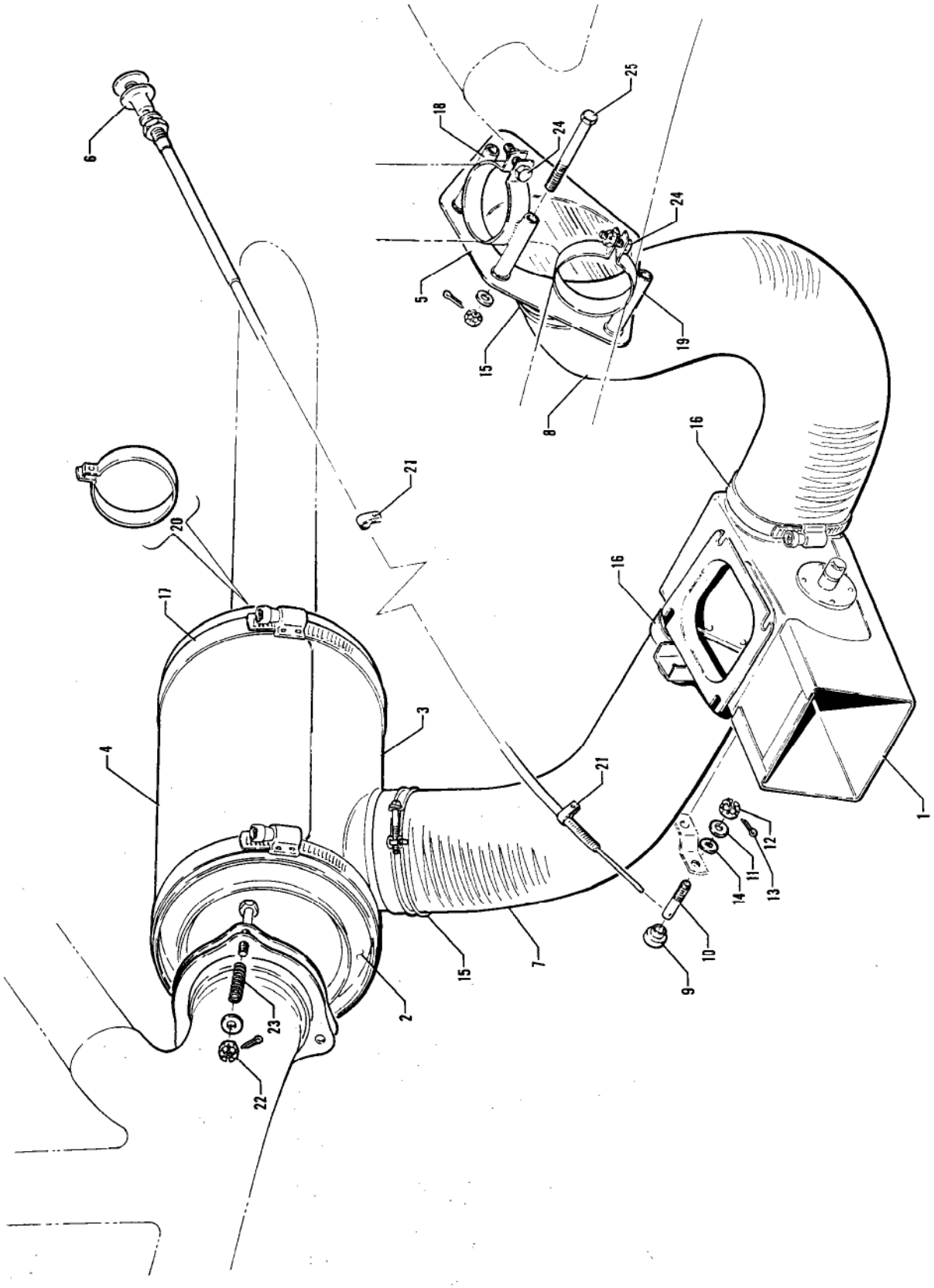

Figure 24F. Heated Alternate Air Induction System Installation
(Serial Nos. 24-3642, 24-4000 to 24-4782 inclusive, 24-4784 to 24-4803 inclusive)

Figure and Index Number	Part Number	Code	NOMENCLATURE	No. Req.	SERIAL NUMBERS AFFECTED
24F-	27186		DRAWING - Heated Alternate Air Induction System Installation		
-1	25269-00		BOX ASSEMBLY - Carburetor air	1	
-2	26345-05		MUFFLER ASSEMBLY - Alternate air	1	
-3	24862-00		SHROUD ASSEMBLY - Muffler, lower	1	
-4	24862-01		SHROUD ASSEMBLY - Muffler, upper	1	
-5	25260-00		SHROUD ASSEMBLY - Carburetor air	1	
-6	455 177		CONTROL ASSEMBLY - Alternate air	1	
-7	22502-18		HOSE - Carburetor air, right	1	
-8	22502-63		HOSE - Carburetor air, left	1	
-9	70371-02		FITTING - Air box	1	
-10	70371-03		STUD - Air box	1	
-11	407 564		WASHER - (AN960-10)	1	
-12	404 100		NUT - (AN310-3)	1	
-13	424 051		COTTER PIN - (MS24665-132)	1	
-14	408 831		WASHER - Spring (#3502-14-47)	1	
-15	454 864		CLAMP - Hose (SAE TY A-3 1/8)	2	
-16	454 848		CLAMP - Hose (#E-45)	2	
-17	554 992		CLAMP - Muffler shroud (#QS200-M88S)	2	
-18	25261-02		CLAMP ASSEMBLY - Carburetor air shroud	1	
-19	25261-03		CLAMP ASSEMBLY - Carburetor air shroud	1	
-20	24788-00		CLAMP ASSEMBLY - Exhaust stack	1	
-21	454 929		CLAMP - (PS10017-2-4)	2	
-22	400 058		BOLT - (AN3-13)	3	
	404 100		NUT - (AN310-3)	3	
	407 564		WASHER - (AN960-10)	3	
	424 051		COTTER PIN - (MS24665-132)	3	
-23	487 437		SPRING - (#186-218)	3	
-24	400 055		BOLT - (AN3-10)	2	
	407 564		WASHER - (AN960-10)	2	
	404 100		NUT - (AN310-3)	2	
	424 051		COTTER PIN - (MS24665-132)	2	
-25	400 065		BOLT - (AN3-22)	3	
	407 584		WASHER - (AN960-10L)	6	
	404 100		NUT - (AN310-3)	3	
	424 051		COTTER PIN - (MS24665-132)	3	

A - Used on PA-24-260 fuel injected models with serial numbers 24-3642, 24-4000 to 24-4782 inclusive, 24-4784 to 24-4803 inclusive if Heated Alternate Air Induction Kit 760 516 is installed.

When ordering, always specify Part Number, Description and Serial Number of Aircraft

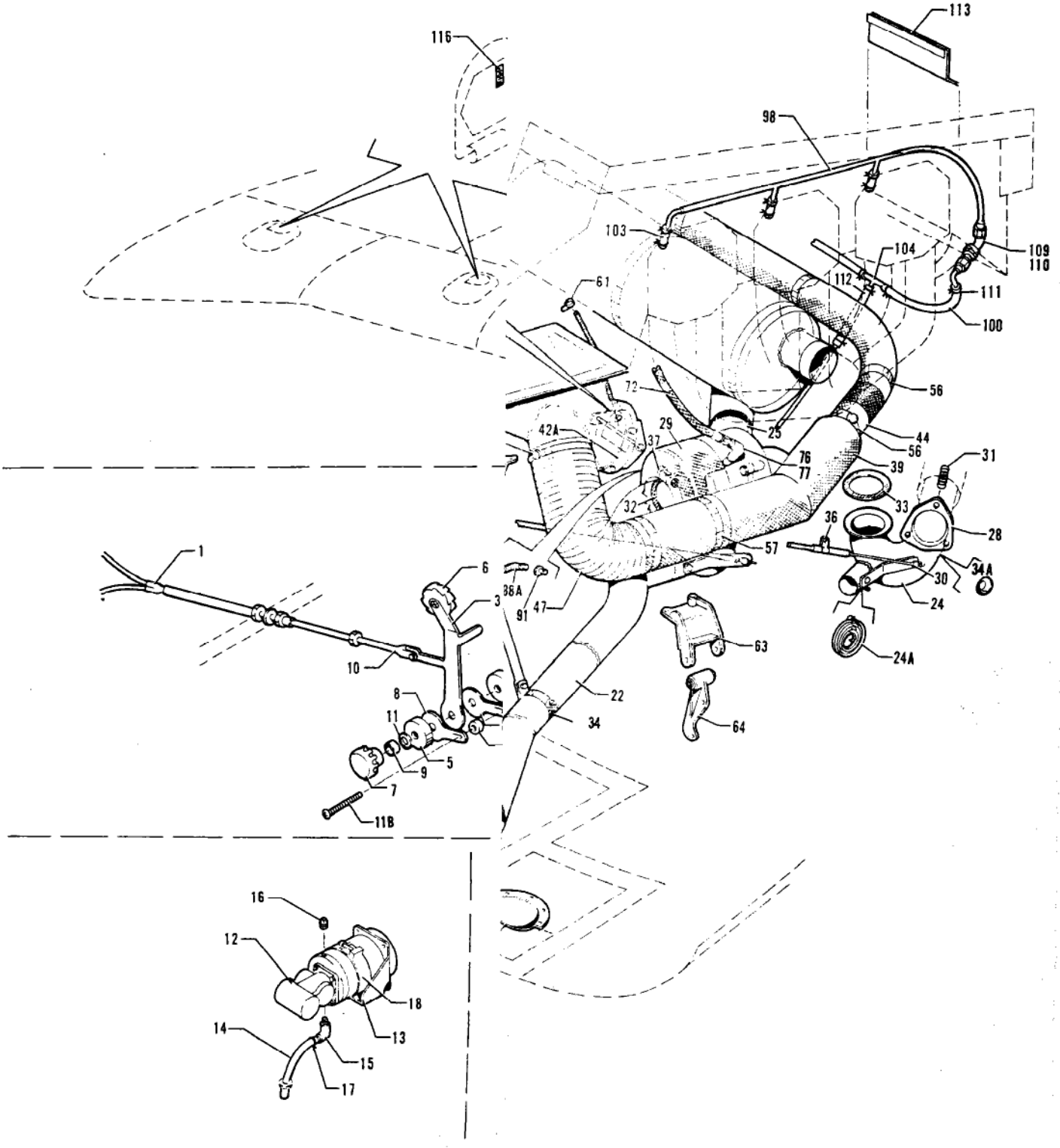

igure 24G. RaJay Turbocharger Components

Figure and Index Number	Part Number	Code	NOMENCLATURE	No. Req.	SERIAL NUMBERS AFFECTED
24G-	27137		DRAWING - Turbocharger System Installation		
			Turbocharger Control System		
-1	757 915		CABLE - Control	1	
-2	757 651		SHAFT ASSEMBLY	1	
-3	761 160		LEVER - Control	1	
-4	757 650		SPACER	1	
-5	757 652		SPACER	1	
-6	760 464		KNOB	1	
-7	571 107		KNOB	1	
-8	17852-03		PLATE - Friction	2	
-9	39994-04		BUSHING	1	
-10	757 914		CLEVIS AND PIN ASSEMBLY	1	
-11	408 827		WASHER - Shakeproof	1	
-11a	39994-13		BUSHING	1	
-11b	417 703		SCREW - (AN526-1032R26)	1	
			Turbocharger Boost Pump System		
-12	757 362		PUMP - Boost	1	
-13	27223-00		BRACKET - Boost pump	1	
-14	755 203		HOSE	1	
-15	754 772		ELBOW	1	
-16	757 361		PLUG	1	
-17	554 778		CLAMP - (GS 4SS Type F)	1	
-18	27224-00		CLAMP	1	
			Turbocharger Oil Cooler System		
-19	751 310		ADAPTER - Oil cooler	1	
-20	755 204		HOSE	1	
-21	757 918		CLAMP	2	
			Turbocharger Engine Exhaust System		
-22	757 657		STACK - Exhaust, left	1	
	757 658		STACK - Exhaust, right	1	
-23	757 655		SHROUD - Muffler, left	1	
	757 656		SHROUD - Muffler, right	1	
-24	755 010		GATE - Waste, left	1	
	755 011		GATE - Waste, right	1	
-24a	757 732		SPRING - Waste gate	1	
-25	757 920		CONNECTOR - Waste gate to muffler, left	1	
	757 921		CONNECTOR - Waste gate to muffler, right	1	
-26	757 653		SUPPORT - Overboard, left	1	
	757 654		SUPPORT - Overboard, right	1	
-27	757 919		MUFFLER CORE	1	
-28	754 822		FLANGE	2	
-29	758 183		BLANKET	2	
-30	757 365		PIVOT	2	
-31	757 659		SPRING	6	

Figure and Index Number	Part Number	Code	NOMENCLATURE	No. Req.	SERIAL NUMBERS AFFECTED
			Turbocharger Engine Exhaust System (cont.)		
24G-32	755 008		GASKET	2	
-33	755 009		GASKET	2	
-34	27208-00		CLAMP ASSEMBLY - Tail pipe support	2	
-34a	408 831		WASHER - Spring (#3502-14-47)	2	
-35	757 922		CLAMP	3	
-36	757 923		CLAMP	2	
-37	757 924		CLAMP	4	
			Turbocharger Air Induction System		
-38	754 585		DISCHARGE ASSEMBLY - Compressor	1	
-39	756 348		TUBE ASSEMBLY - Inlet transition	1	
-40	756 521		VALVE - Pressure relief	1	
-41	756 349		TUBE - Air induction	1	
-42	751 311		ADAPTER - Filter box	1	
-42a	757 979		CAP ASSEMBLY - Filter box adapter	1	
-43	754 586		DUCT - Flexible	1	
-44	754 587		DUCT - Flexible	2	
-45	754 588		DUCT - Flexible	1	
-46	754 589		DUCT - Flexible	2	
-47	754 590		DUCT - Flexible	1	
-48	754 591		DUCT - Cabin heat transition	1	
-49	754 592		DUCT - Cabin heat	1	
-50	755 205		HOSE	1	
-51	755 013		GASKET	1	
-52	756 045		"O" RING - (MS29513-138)	1	
-53	70371-02		BUSHING	1	
-54	70371-03		PIN	1	
-55	757 925		CLAMP	4	
-56	757 926		CLAMP	9	
-57	757 927		CLAMP	2	
-58	757 928		CLAMP	3	
-59	757 929		CLAMP	2	
-60	554 778		CLAMP - (GS4SS Type F)	1	
-61	757 931		CLAMP	1	
			Turbocharger Mount System		
-62	756 350		TURBOCHARGER	2	
-63	761 476		MOUNT - Turbocharger, upper, left	1	
	761 477		MOUNT - Turbocharger, upper, right	1	
-64	761 474		MOUNT - Turbocharger housing, left	1	
	761 475		MOUNT - Turbocharger housing, right	1	
-65	757 660		STRUT - Turbocharger, aft, left	1	
	757 663		STRUT - Turbocharger, aft, right	1	
-66	757 662		STRUT - Turbocharger, forward, left	1	
	757 661		STRUT - Turbocharger, forward, right	1	
-67	761 478		MOUNT - Exhaust housing	2	
-68	757 664		SPACER	1	

Figure and Index Number	Part Number	Code	NOMENCLATURE	No. Req.	SERIAL NUMBERS AFFECTED
			Turbocharger Oil Supply System		
24G-69	756 522		VALVE - Check	1	
-70	755 206		HOSE ASSEMBLY	1	
-71	758 184		BOLT	1	
-72	755 208		HOSE ASSEMBLY	2	
-73	453 616		BUSHING - (AN912-1D)	1	
-74	754 773		ELBOW	1	
-75	754 774		ELBOW - (AN822-4-4D)	1	
-76	754 775		ELBOW	2	
-77	752 540		NIPPLE	2	
-78	476 679		NIPPLE - (AN816-4-4D)	1	
-79	756 351		TEE	1	
-80	757 932		COUPLING - Pipe 1/4" (AN910-2D)	1	
			Turbocharger Oil Scavenge System		
-81	757 366		PUMP - Scavenge	1	
-82	756 523		VALVE - Check	1	
-83	757 666		SUMP - Oil	1	
-84	755 209		HOSE ASSEMBLY	1	
-85	755 210		HOSE ASSEMBLY	1	
-86	755 211		HOSE ASSEMBLY	1	
-87	458 867		ELBOW - (AN822-6-6D)	1	
-88	458 895		ELBOW - (AN822-6D)	1	
-88a	458 892		ELBOW - (AN823-6D)	1	
-89	757 665		STUD	4	
-90	462 023		GASKET - (AN4045-1)	2	
-91	758 186		BUSHING - (AN912-5D)	2	
-91a	755 217		HOSE ASSEMBLY	1	
-91b	458 868		ELBOW - (MS20822-6)	2	
-91c	458 871		ELBOW - (MS20823-6)	2	
-91d	27209-00		CLAMP ASSEMBLY - Oil sump	2	
			Turbocharger Fuel System		
-92	752 542		NOZZLE - Blast	1	
-93	757 667		SHROUD - Fuel pump	1	
-94	758 187		BRACKET - Mixture control	1	
-95	754 593		DUCT - Flexible	1	
-96	757 934		CLAMP	2	
-97	757 935		CLAMP	1	
			Turbocharger Boost Reference System		
-98	761 479		MANIFOLD - Boost reference, left	1	
	761 480		MANIFOLD - Boost reference, right	1	
-99	755 216		HOSE ASSEMBLY	2	
-100	82371-121		HOSE	1	
-101	82371-122		HOSE	1	
-102	27217-00		LINE - Boost reference	1	
-103	82371-120		HOSE	1	

Figure and Index Number	Part Number	Code	NOMENCLATURE	No. Req.	SERIAL NUMBERS AFFECTED
			Turbocharger Boost Reference System (cont.)		
24G-104	756 352		TEE - Boost reference	1	
-105	756 353		TEE - (AN826-2D)	1	
-106	458 872		ELBOW - (AN822-2D)	1	
-107	754 776		ELBOW - Bulkhead (AN839-4D)	1	
-108	458 929		ELBOW - (AN842-4D)	1	
-109	458 910		ELBOW - (AN837-4D)	1	
-110	477 618		NUT - (AN924-4D)	2	
-111	554 778		CLAMP - (GS 4SS Type F)	20	
-112	16633-75		HOSE - Boost reference	2	
			Turbocharger Cylinder Baffles		
-113	757 936		BAFFLE - Cylinder, left	1	
	757 937		BAFFLE - Cylinder, right	1	
			Turbocharger Cowl Fairing		
-114	754 821		FAIRING - Cowl flap	2	
			Turbocharger Placards		
-115	757 363		PLACARD - Turbocharger flight operation	1	
-116	757 364		PLACARD - Fuel cap	4	

When ordering, always specify Part Number, Description and Serial Number of Aircraft

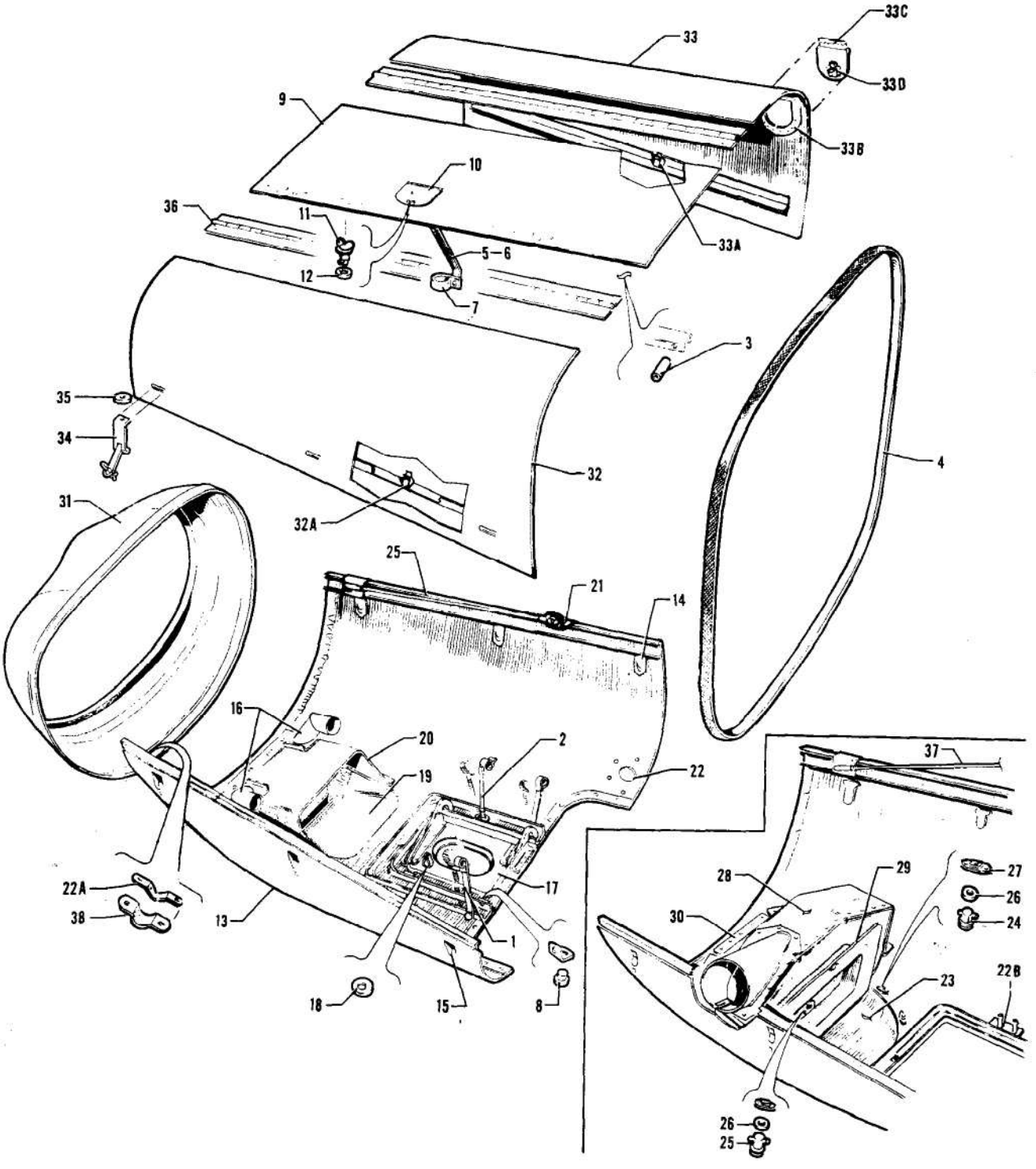

Figure 25. Engine Cowl Installation
(PA-24-180 and PA-24-250 - Serial Nos. 24-1 and up)
(PA-24-260 - Serial Nos. 24-3642, 24-4000 to 24-4782, 24-4784 to 24-4803 inclusive)

Figure and Index Number	Part Number	Code	NOMENCLATURE	No. Req.	SERIAL NUMBERS AFFECTED
25-	21688		DRAWING - Engine Cowl Installation "250" & "260"		
	21142		DRAWING - Engine Cowl Installation "180"		24-1 to 24-102 inclusive
	21602		DRAWING - Engine Cowl Installation "180"		24-103 to 24-1476 inclusive
	22008		DRAWING - Engine Cowl Installation "180"		24-1477 and up
-1	21062-00		TUBE - Engine bottom cowl support	2	
-2	21326-00		SUPPORT ASSEMBLY - Engine cowl bottom "250"	1	24-1 to 24-1460 inclusive, 24-1462 to 24-1466 inclusive
	21326-03		SUPPORT ASSEMBLY - Engine cowl bottom "180"	1	24-1 to 24-1460 inclusive, 24-1462 to 24-1466 inclusive
	21326-05		SUPPORT ASSEMBLY - Engine cowl bottom	1	24-1461, 24-1467 and up
-3	14843-67		BUSHING - Cowl attachment "250"	2	24-1 to 24-1476 inclusive
-4	180 817		WEBBING - Cowl	18'	
-5	21728-03		STRAP - Cowl attachment, right, "250" & "260"	1	
	81262-79		STRAP - Cowl attachment, right, "180"	1	24-1 to 24-102 inclusive
	21608-00		STRAP - Cowl attachment, right, "180"	1	24-103 to 24-1476 inclusive
	21608-02		STRAP - Cowl attachment, right, "180"	1	24-1477 to 24-2599 inclusive
	21609-02		STRAP - Cowl attachment, right, "180"	1	24-2600 and up
-6	21728-02		STRAP - Cowl attachment, left, "250"	1	24-1 to 24-2599 inclusive
	21728-04		STRAP - Cowl attachment, left, "250"	1	24-2600 to 24-3483 inclusive
	21608-02		STRAP - Cowl attachment, left, "250" & "260"	1	24-3484 and up
	21441-00		STRAP - Cowl attachment, left, "180"	1	24-1 to 24-102 inclusive
	21609-00		STRAP - Cowl attachment, left, "180"	1	24-103 to 24-1476 inclusive
	21609-02		STRAP - Cowl attachment, left, "180"	1	24-1477 and up
-7	21440-00		CLAMP ASSEMBLY - Cowl attachment, left, "180"	1	
	21440-01		CLAMP ASSEMBLY - Cowl attachment, right, "180"	1	
-8	453 641		BUMPER - Rubber	2	
-9	SK928-11	B	COWL ASSEMBLY - Engine top "250"	1	
	SK928-3	B	COWL ASSEMBLY - Engine top "180"	1	24-1 to 24-102 inclusive
	SK928-7	B	COWL ASSEMBLY - Engine top "180"	1	24-103 to 24-1476 inclusive
	SK928-11	B	COWL ASSEMBLY - Engine top "180"	1	24-1477 and up
	21950-15		COWL ASSEMBLY - Engine top "260"	1	
-10	18872-10		PLATE ASSEMBLY - Oil filler	1	24-1 to 24-3433 inclusive
	23332-00		PLATE ASSEMBLY - Oil filler	1	24-3434 and up
-11	487 583	C	STUD - Wing (2600-1)	1	
-12	494 060	C	WASHER - (2600-LW)	1	
-12a	472 017	D	LATCH - Push button	1	

A - Used on PA-24-180 and PA-24-250 with serial numbers 24-1 and up, and PA-24-260 with serial numbers 24-3642, 24-4000 to 24-4782 inclusive, 24-4784 to 24-4803 inclusive.
B - This material furnished unassembled for proper fit. Hardware Kit, Part No. 754 225, is available to assemble complete cowl.
C - Used on plate assembly, Part No. 18872-10 only.
D - Used on plate assembly, Part No. 23332-00 only.

Figure and Index Number	Part Number	Code	NOMENCLATURE	No. Req.	SERIAL NUMBERS AFFECTED
25-13	SK928-14	EF	COWL ASSEMBLY - Engine bottom "250"	1	24-103 to 24-161 inclusive
	21695-32	EF	COWL ASSEMBLY - Engine bottom "250"	1	24-162 to 24-1329 inclusive
	21695-38	F	COWL ASSEMBLY - Engine bottom "250"	1	24-1330 to 24-1476 inclusive
	21950-07		COWL ASSEMBLY - Engine bottom "250"	1	24-1477 to 24-2174 inclusive, 24-2176 to 24-2298 inclusive
	21950-14		COWL ASSEMBLY - Engine bottom "250"	1	24-2175, 24-2299 to 24-2843
	22857-02		COWL ASSEMBLY - Engine bottom "250"	1	24-2844 and up
	SK928-6	E	COWL ASSEMBLY - Engine bottom "180"	1	24-1 to 24-102 inclusive
	SK928-10	E	COWL ASSEMBLY - Engine bottom "180"	1	24-103 to 24-220 inclusive
	21143-00		COWL ASSEMBLY - Engine bottom "180"	1	24-221 to 24-1329 inclusive
	21143-29		COWL ASSEMBLY - Engine bottom "180"	1	24-1330 to 24-1476 inclusive
	21950-07		COWL ASSEMBLY - Engine bottom "180"	1	24-1477 to 24-2174 inclusive, 24-2176 to 24-2298 inclusive
	21950-14		COWL ASSEMBLY - Engine bottom "180"	1	24-2175, 24-2299 to 24-2843
	22857-12		COWL ASSEMBLY - Engine bottom "180"	1	24-2844 to 24-3163 inclusive
	22857-02		COWL ASSEMBLY - Engine bottom "180"	1	24-3164 and up
	24895-02	C	COWL ASSEMBLY - Engine bottom "260"	1	
	24895-17		COWL ASSEMBLY - Engine bottom "260"	1	24-4247, 24-4300 and up
-14	12707-04		CUP - Engine cowl fastener	6	
-15	484 341	D	RECEPTACLE - (99947-P130)	6	
-16	21143-18	B	TAKE-OFF - Left	1	24-1 to 24-1476 inclusive
	21143-20	B	TAKE-OFF - Right	1	24-1 to 24-1251 inclusive
-17	21112-00		DOOR ASSEMBLY - Nose gear	1	
-18	80012-97		BUSHING	2	
-19	21143-15	B	SCOOP ASSEMBLY - Bottom cowl	1	
-20	21143-23	B	BAFFLE ASSEMBLY - Bottom cowl	1	
-21	21973-00		BRACKET ASSEMBLY - Cowl support "250"	2	24-162 to 24-1476 inclusive
-22	22090-00		PLATE - Oil breather tube vent	1	24-1477 and up
	22090-02		PLATE - Oil breather tube vent "260"	1	
-22a	454 069		CATCH - Front, bottom	1	
-22b	25556-00		TUBE ASSEMBLY - Battery vent "260"	1	24-4247, 24-4300 and up

A - Used on PA-24-180 and PA-24-250 with serial numbers 24-1 and up, and PA-24-260 with serial numbers 24-3642, 24-4000 to 24-4782, 24-4784 to 24-4803 inclusive.

B - Not used on cowl, Part Nos. 21950-07, 21950-14, 22856-02, 22857-12, 24895-02, 24895-17 or if Carburetor Air Filter Kit 754 285 has been installed.

C - Used on PA-24-260 with serial numbers 24-4000 to 24-4246 inclusive, 24-4248 to 24-4299 inclusive.

D - Component parts of 21695-32, 21695-38 and 21950-04 only must be ordered separately for balance of bottom cowls.

E - This material furnished unassembled for proper fit. Hardware Kit, Part No. 754 225, is available to assemble complete cowl.

F - If Carburetor Air Filter Kit 754 285 has been installed, secure bottom cowl, Part No. 21950-04.

Figure and Index Number	Part Number	Code	NOMENCLATURE	No. Req.	SERIAL NUMBERS AFFECTED
25-23	21947-00	C	SCOOP ASSEMBLY - Bottom cowl	1	
	21947-03		SCOOP ASSEMBLY - Bottom cowl "180"	1	24-2844 to 24-3163 inclusive
	23134-00		SCOOP ASSEMBLY - Bottom cowl "250"	1	24-2844 and up
	23134-00		SCOOP ASSEMBLY - Bottom cowl "180" & "260"	1	24-3164 and up
-24	487 618		STUD - (5S5-5)	16	24-1477 to 24-2843 inclusive
	487 644		STUD - (2700-4)	9	24-2844 and up
-25	487 619		STUD - (5S5-9)	3	24-1477 to 24-2843 inclusive
	487 643		STUD - (2700-2)	8	24-2844 and up
-26	494 065		WASHER - (5S3-1)	19	24-1477 to 24-2843 inclusive
	494 088		WASHER - (27S5-1)	17	24-3577 and up
-27	484 345	C	RECEPTACLE - (5R2-2)	16	
10	484 342		RECEPTACLE - (212-12D)	16	24-2844 and up
-28	22416-00	C	BULKHEAD ASSEMBLY - Carburetor air filter (complete)	1	
	22416-02	D	BULKHEAD ASSEMBLY - Carburetor air filter (complete)	1	
	24825-00		BULKHEAD ASSEMBLY - Carburetor air filter (complete) "260"	1	24-3642, 24-4000 to 24-4768 incl.
	25996-00		BULKHEAD ASSEMBLY - Carburetor air filter (complete) "260"	1	24-4769 and up
-29	21949-00	C	BULKHEAD ASSEMBLY - Bottom cowl	1	
	21949-05	D	BULKHEAD ASSEMBLY - Bottom cowl	1	
	21949-05		BULKHEAD ASSEMBLY - Bottom cowl "260"	1	24-3642, 24-4000 to 24-4768 incl.
	25995-00		BULKHEAD ASSEMBLY - Bottom cowl "260"	1	24-4769 and up
-30	21948-00		COVER ASSEMBLY - Bottom cowl "180" & "250"	1	
	21948-02		PLATE - Cover, front "260"	1	
	24825-02		PLATE - Cover, top "260"	1	
-30a	24824-00		TAKE-OFF ASSEMBLY - Air filter "260"	1	
-31	SK928-2		COWL ASSEMBLY - Engine nose "180"	1	24-1 to 24-102 inclusive
	22039-02		COWL ASSEMBLY - Engine nose "180" & "250"	1	24-103 to 24-1476 inclusive
	22039-03		COWL ASSEMBLY - Engine nose "180" & "250"	1	24-1477 and up
	22039-04		COWL ASSEMBLY - Engine nose "260"	1	
-32	SK928-12	B	COWL ASSEMBLY - Engine left side, "250"	1	
	SK928-5	B	COWL ASSEMBLY - Engine left side, "180"	1	24-1 to 24-102 inclusive
	SK928-9	B	COWL ASSEMBLY - Engine left side, "180"	1	24-103 to 24-1476 inclusive
	SK928-12	B	COWL ASSEMBLY - Engine left side, "180"	1	24-1477 and up
	24895-04		COWL ASSEMBLY - Engine left side, "260"	1	
-32a	454 890		CLIP - Rear, side cowl "180", "250"	1	
	454 873		CLIP - Rear, side cowl (#125002) "260"	1	

A - Used on PA-24-180 and PA-24-250 with serial numbers 24-1 and up, and PA-24-260 with serial numbers 24-3642, 24-4000 to 24-4782, 24-4784 to 24-4803 inclusive.

B - This material furnished unassembled for proper fit. Hardware Kit 754 225 is available to assemble complete cowl.

C - Used on PA-24-180 and PA-24-250 with serial numbers 24-1477 to 24-2843 inclusive. Also used on PA-24-250 with serial numbers 24-103 to 24-1476 inclusive if Carburetor Air Filter Kit 754 285 has been installed.

D - Used on PA-24-180 and PA-24-250 with serial numbers 24-2844 and up.

Figure and Index Number	Part Number	Code	NOMENCLATURE	No. Req.	SERIAL NUMBERS AFFECTED
25-33	SK928-13	C	COWL ASSEMBLY - Engine right side, "250"	1	
	SK928-4	C	COWL ASSEMBLY - Engine right side, "180"	1	24-1 to 24-102 inclusive
	SK928-8	C	COWL ASSEMBLY - Engine right side, "180"	1	24-103 to 24-1476 inclusive
	SK928-13	C	COWL ASSEMBLY - Engine right side, "180"	1	24-1477 and up
	24895-03		COWL ASSEMBLY - Engine right side, "260"	1	
	24895-18	B	COWL ASSEMBLY - Engine right side, "260"	1	
-33a	454 890		CLIP - Rear, side cowl "180", "250"	1	
	454 873		CLIP - Rear, side cowl (#125002) "260"	1	
-33b	23331-00	B	PLATE - Nacelle reinforcement "260"	1	
-33c	23332-00	B	PLATE ASSEMBLY - Nacelle access "260"	1	
-33d	472 017	B	LATCH - Push button (#KM610-32)	1	
-34	12723-00		FASTENER ASSEMBLY - Cowl	6	
-35	81342-19		WASHER - Engine cowl fastener	24	
-36	189 353		HINGE ASSEMBLY - Cowl (complete)	2	
-37	21972-00		ROD ASSEMBLY - Cowl support	2	24-1461, 24-1467 to 24-2843
	22709-00		ROD ASSEMBLY - Cowl support	2	24-2844 and up
	22709-04		ROD ASSEMBLY - Cowl support "260"	2	
-38	80222-35		CLAMP - Front, bottom	1	

A - Used on PA-24-180 and PA-24-250 with serial numbers 24-1 and up, and PA-24-260 with serial numbers 24-3642, 24-4000 to 24-4782, 24-4784 to 24-4803 inclusive.

B - Used on PA-24-260 with serial numbers 24-4247, 24-4300 and up if External Power Receptacle is installed.

C - This material furnished unassembled for proper fit. Hardware Kit 754 225 is available to assemble complete cowl.

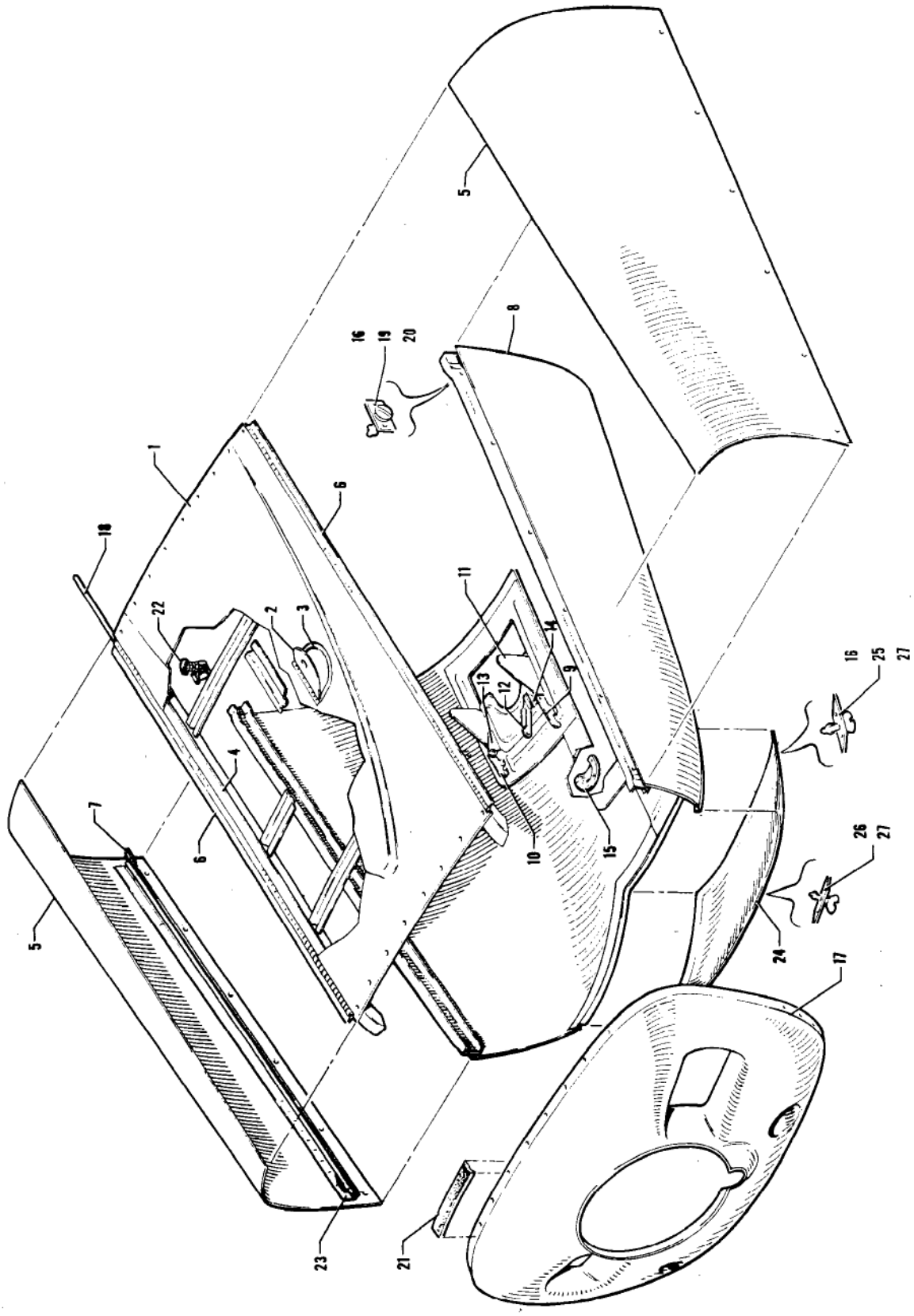

Figure 25A. Engine Cowl Installation "400"

Figure and Index Number	Part Number	Code	NOMENCLATURE	No. Req.	SERIAL NUMBERS AFFECTED
25A-	24611		DRAWING - Engine Cowl Installation		
-1	24611-43		COWL ASSEMBLY - Top (complete)	1	
-2	25010-00		PLATE ASSEMBLY - Access	1	
-3	24077-00		PLATE - Access plate reinforcement	1	
-4	24611-16		HINGE HALF - Left	1	
	24611-17		HINGE HALF - Right	1	
-5	24611-44		COWL ASSEMBLY - Side, left (complete)	1	
	24611-45		COWL ASSEMBLY - Side, right (complete)	1	
-6	24611-18		HINGE HALF - Left	1	
	24611-19		HINGE HALF - Right	1	
-7	22708-00		PLATE - Cowl support rod attachment	1	
-8	24611-46		COWL ASSEMBLY - Bottom (complete)	1	
-9	23124-05		HINGE ASSEMBLY - Cowl flap, left	1	
	23124-02		HINGE ASSEMBLY - Cowl flap, right	1	
-10	23124-03		HINGE ASSEMBLY - Cowl flap, left	1	
	23124-04		HINGE ASSEMBLY - Cowl flap, right	1	
-11	24541-00		FLAP ASSEMBLY - Cowl, left	1	
	24541-01		FLAP ASSEMBLY - Cowl, right	1	
-12	23125-00		ARM - Cowl flap control, left	1	
	23125-01		ARM - Cowl flap control, right	1	
-13	23123-05		HINGE ASSEMBLY - Cowl flap, left	1	
	23123-02		HINGE ASSEMBLY - Cowl flap, right	1	
-14	23123-03		HINGE ASSEMBLY - Cowl flap, left	1	
	23123-04		HINGE ASSEMBLY - Cowl flap, right	1	
-15	22090-00		PLATE - Oil breather tube vent, left	1	
-16	484 322		RECEPTACLE - (#82-35-302-15)	26	
-17	24610-00		COWL ASSEMBLY - Nose	1	
-18	24611-20		PIN - Hinge, left	1	
	24611-21		PIN - Hinge, right	1	
-19	487 658		STUD - (#2-F-100)	12	
-20	484 745		RING - Retaining (#82-32-101-17)	12	
-21	180 816		WEBBING - Anti-squeak	14"	
-22	23132-00		SUPPORT ASSEMBLY - Top cowl	2	
-23	24531-00		ROD ASSEMBLY - Cowl support	2	
-24	24611-52		PANEL ASSEMBLY - Access	1	
-25	487 659		STUD - (#2-F-120)	14	
-26	487 661		STUD - (#2-F-180)	8	
-27	484 745		RING - Retaining (#82-32-101-17)	22	

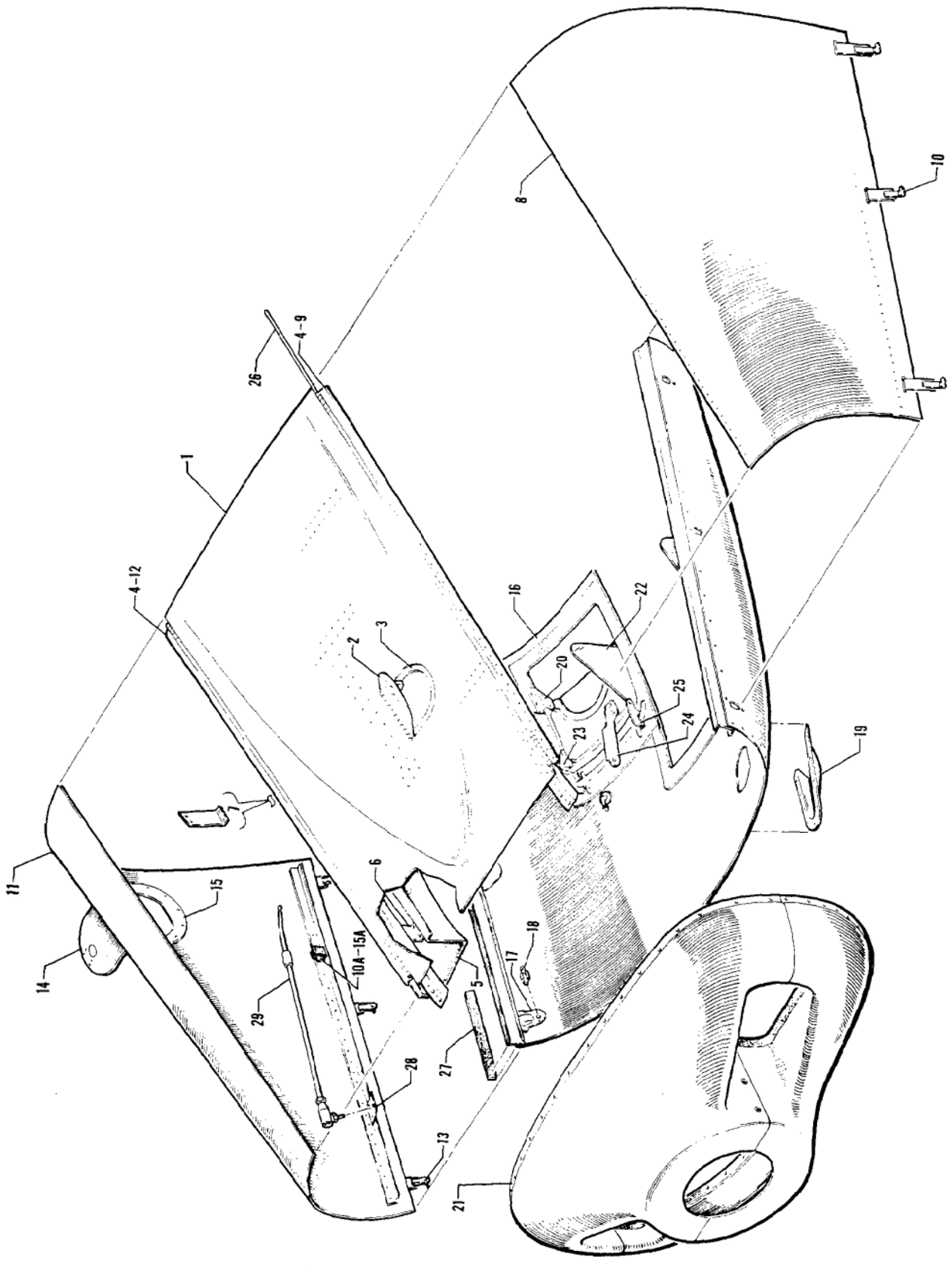

Figure 25B. Engine Cowl Installation
(Serial Nos. 24-4783, 24-4304 and up)

Figure and Index Number	Part Number	Code	NOMENCLATURE	No. Req.	SERIAL NUMBERS AFFECTED
25B-	26277	A	DRAWING - Engine Cowl Installation		
	27088	B	DRAWING - Engine Cowl Installation		
-1	26264-00	A	COWL ASSEMBLY - Top	1	
	27084-00	C	COWL ASSEMBLY - Top	1	24-4935 and up
	27084-03	BD	COWL ASSEMBLY - Top	1	
-2	25010-03		PLATE ASSEMBLY - Access	1	
-3	24077-00		PLATE - Access plate reinforcement	1	
-4	26251-02		HINGE HALF - Left	1	
	26251-03		HINGE HALF - Right	1	
-5	26849-00		DUCT ASSEMBLY - Air filter inlet	1	
	26849-04	D	DUCT ASSEMBLY - Air filter inlet	1	
-6	26845-03		BRACKET - Air filter inlet duct attachment, front	1	
-7	26845-02		BRACKET - Air filter inlet duct attachment, rear	1	
-8	26266-04	A	COWL ASSEMBLY - Side, left	1	
	27078-00	B	COWL ASSEMBLY - Side, left	1	
-9	26251-04		HINGE HALF - Left	1	
-10	12723-00		FASTENER ASSEMBLY - Cowl	3	
-10a	454 873		CLIP - (#125002)	1	
-11	26266-05	A	COWL ASSEMBLY - Side, right	1	
	27078-01	B	COWL ASSEMBLY - Side, right	1	
-12	26251-05		HINGE HALF - Right	1	
-13	12723-00		FASTENER ASSEMBLY - Cowl	3	
-14	23332-00		PLATE ASSEMBLY - Engine nacelle access	1	
-15	23331-00		PLATE - Engine nacelle reinforcement	1	
-15a	454 873		CLIP - (#125002)	1	
-16	26276-00	A	COWL ASSEMBLY - Bottom	1	
	27086-00	C	COWL ASSEMBLY - Bottom	1	24-4935 and up
	27086-04	BD	COWL ASSEMBLY - Bottom	1	
-17	12707-00		CUP - Cowl fastener	6	
-18	484 341		RECEPTACLE - (99947-P130)	6	
-19	26837-00	C	SHROUD - Tail pipe	1	
	27180-00	D	FAIRING - Bottom cowl	1	
-20	27145-00		STOP ASSEMBLY - Cowl flap, left	1	
	27145-01		STOP ASSEMBLY - Cowl flap, right	1	
-21	27087-00		COWL ASSEMBLY - Nose	1	
-22	26817-00		FLAP ASSEMBLY - Cowl, left	1	
	26817-01		FLAP ASSEMBLY - Cowl, right	1	
-23	23123-03		HINGE ASSEMBLY - Left cowl flap, rear half, left	1	
	23123-05		HINGE ASSEMBLY - Left cowl flap, rear half, right	1	
	23123-04		HINGE ASSEMBLY - Right cowl flap, rear half, left	1	
	23123-02		HINGE ASSEMBLY - Right cowl flap, rear half, right	1	
-24	23125-00		ARM - Cowl flap control, left	1	
	23125-01		ARM - Cowl flap control, right	1	

A - Used on airplanes with serial numbers 24-4783, 24-4805 to 24-4903 inclusive, 24-4905 to 24-4913 inclusive, 24-4915 to 24-4934 inclusive.
B - Used on airplanes with serial numbers 24-4804, 24-4904, 24-4914 and 24-4935 and up.
C - Used if RaJay Turbocharger is not installed.
D - Used if RaJay Turbocharger is installed.

When ordering, always specify Part Number, Description and Serial Number of Aircraft

Figure and Index Number	Part Number	Code	NOMENCLATURE	No. Req.	SERIAL NUMBERS AFFECTED
25B-25	23124-03		HINGE ASSEMBLY - Left cowl flap, front half, left	1	
	23124-05		HINGE ASSEMBLY - Left cowl flap, front half, right	1	
	23124-04		HINGE ASSEMBLY - Right cowl flap, front half, left	1	
	23124-02		HINGE ASSEMBLY - Right cowl flap, front half, right	1	
-26	26251-06		PIN - Hinge, left	1	
	26251-07		PIN - Hinge, right	1	
-27	180 806		WEBBING - Anti-squeak	39"	
-28	22708-00		PLATE - Cowl support rod attachment	2	
-29	22709-04		ROD ASSEMBLY - Cowl support	2	

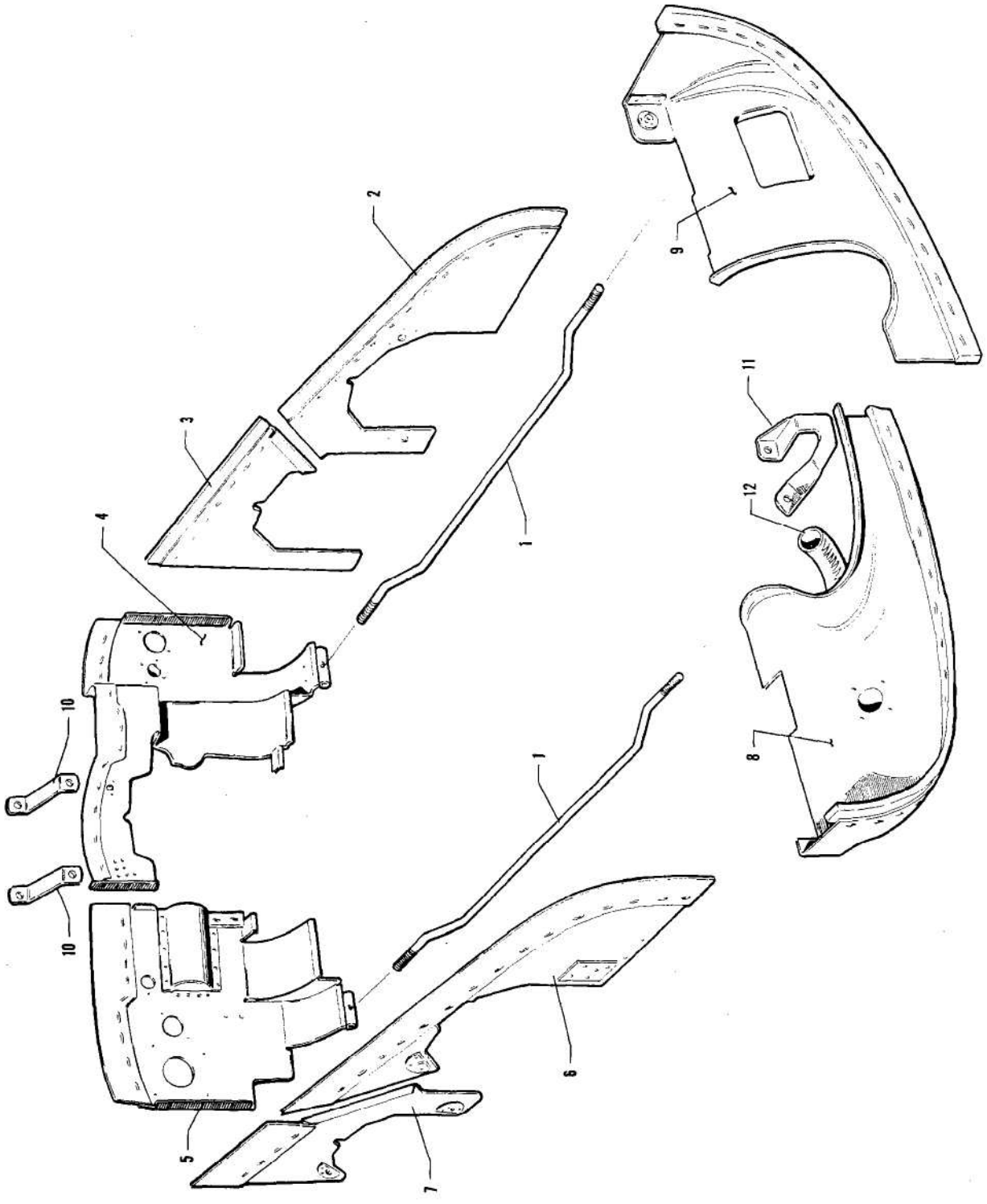

Figure 26. Engine Baffle Installation "180"

Figure and Index Number	Part Number	Code	NOMENCLATURE	No. Req.	SERIAL NUMBERS AFFECTED
26-	21166		DRAWING - Engine Baffle Installation		24-1 to 24-1476 inclusive
	22009		DRAWING - Engine Baffle Installation		24-1477 and up
-1	14513-00		ROD - Engine baffle tie	2	
-2	21132-00		BAFFLE ASSEMBLY - Left side, front	1	24-1 to 24-1476 inclusive
	21535-00		BAFFLE ASSEMBLY - Left side, front	1	24-1477 and up
-3	21133-00		BAFFLE ASSEMBLY - Left side, rear	1	24-1 to 24-1476 inclusive
	22024-00		BAFFLE ASSEMBLY - Left side, rear	1	24-1477 and up
-4	21134-00		BAFFLE ASSEMBLY - Left rear	1	24-1 to 24-102 inclusive
	21628-00		BAFFLE ASSEMBLY - Left rear	1	24-103 to 24-1476 inclusive
	22022-00		BAFFLE ASSEMBLY - Left rear	1	24-1477 and up
-5	21137-00		BAFFLE ASSEMBLY - Right rear	1	24-1 to 24-102 inclusive
	21627-00		BAFFLE ASSEMBLY - Right rear	1	24-103 to 24-1476 inclusive
	22023-00		BAFFLE ASSEMBLY - Right rear	1	24-1477 and up
-6	21135-00		BAFFLE ASSEMBLY - Right side, front	1	24-1 to 24-1476 inclusive
	21530-00		BAFFLE ASSEMBLY - Right side, front	1	24-1477 and up
-7	21136-00		BAFFLE ASSEMBLY - Right side, rear	1	
-8	21138-00		BAFFLE ASSEMBLY - Right front	1	
-9	21139-00		BAFFLE ASSEMBLY - Left front	1	
-10	21146-00		LUG - Baffle attachment	2	
-11	21147-00		BRACKET - Baffle support	1	
-12	10525-51		HOSE - Generator air blast 11"	1	

When ordering, always specify Part Number, Description and Serial Number of Aircraft

LUTEN-SERVICE
Straubing LBA II-A-170
Telefon 09-22[illegible]

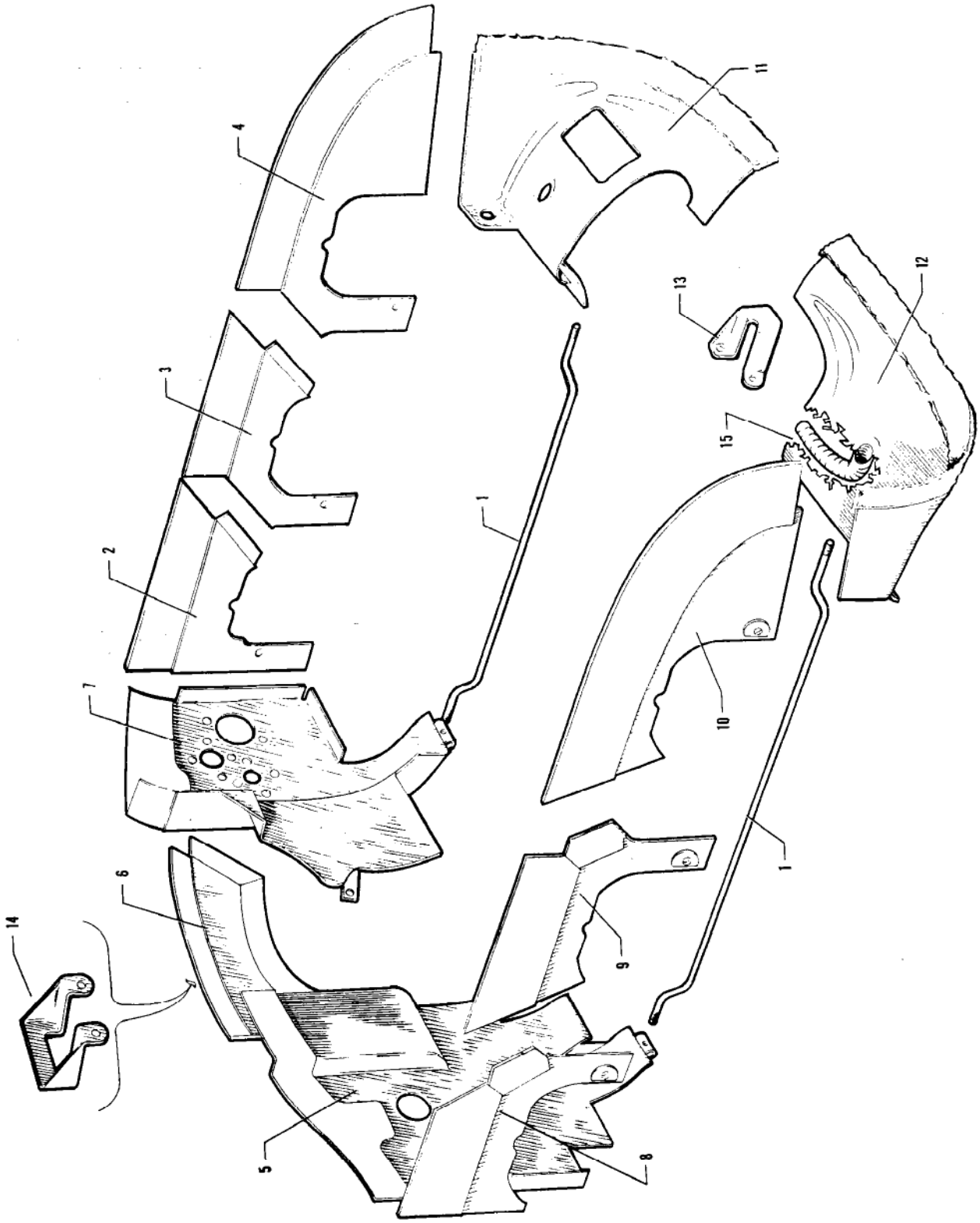

Figure 26A. Engine Baffle Installation
(PA-24-250 - Serial Nos. 24-103 and up)
(PA-24-260 - Serial Nos. 24-3642, 24-4000 to 24-4782, 24-4784 to 24-4803 inclusive)

Figure and Index Number	Part Number	Code	NOMENCLATURE	No. Req.	SERIAL NUMBERS AFFECTED
26A-	21660	Y	DRAWING - Baffle Installation		24-103 to 24-1476 inclusive
	21977	Y	DRAWING - Baffle Installation		24-1477 and up
	24829	V	DRAWING - Baffle Installation		
-1	14513-02		ROD - Baffle tie rod	2	
-2	21533-00		BAFFLE ASSEMBLY - Left side, rear	1	
-3	21513-00		BAFFLE ASSEMBLY - Left side, center	1	
-4	21535-00		BAFFLE ASSEMBLY - Left side, front	1	
-5	21579-00	CY	BAFFLE ASSEMBLY - Right rear	1	
	23077-03	V	BAFFLE ASSEMBLY - Right rear	1	
-6	21514-00		BAFFLE ASSEMBLY - Center rear	1	
-7	21596-00	Y	BAFFLE ASSEMBLY - Left rear	1	24-103 to 24-1476 inclusive
	21976-00	EY	BAFFLE ASSEMBLY - Left rear	1	
	22291-00	Y	BAFFLE ASSEMBLY - Left rear	1	24-2299 and up
	21596-10	DV	BAFFLE ASSEMBLY - Left rear	1	
-8	21532-00		BAFFLE ASSEMBLY - Right side, rear	1	
-9	21512-00		BAFFLE ASSEMBLY - Right side, center	1	
-10	21530-00		BAFFLE ASSEMBLY - Right rear, front	1	
-11	21139-09		BAFFLE ASSEMBLY - Left front	1	24-103 to 24-1329 inclusive
	21139-12		BAFFLE ASSEMBLY - Left front	1	24-1330 and up
-12	21138-00	Y	BAFFLE ASSEMBLY - Right front	1	
	21138-08	V	BAFFLE ASSEMBLY - Right front	1	
-13	21518-00	Y	BRACKET - Front baffle attachment	1	
	25019-00	V	BRACKET - Front baffle attachment	1	
-14	21517-00	B	BRACKET - Rear baffle attachment	1	
	21146-00		BRACKET - Rear baffle attachment	2	24-2299 and up
-15	10525-51	Y	HOSE - Generator air blast 11"	1	
	22502-60	V	HOSE - Generator air blast 13"	1	

A - Used on PA-24-250 with serial numbers 24-103 and up, PA-24-260 with serial numbers 24-3642, 24-4000 to 24-4782 inclusive, 24-4784 to 24-4803 inclusive.
B - Used on airplanes with serial numbers 24-1 to 24-2174 inclusive, 24-2176 to 24-2298 inclusive.
C - See Figure 24D if fuel injection is installed.
D - See Figure 24E if fuel injection is installed.
E - Used on airplanes with serial numbers 24-1477 to 24-2174 inclusive, 24-2176 to 24-2298 inclusive.
V - Used on PA-24-260 airplanes only.
Y - Used on PA-24-250 airplanes only.

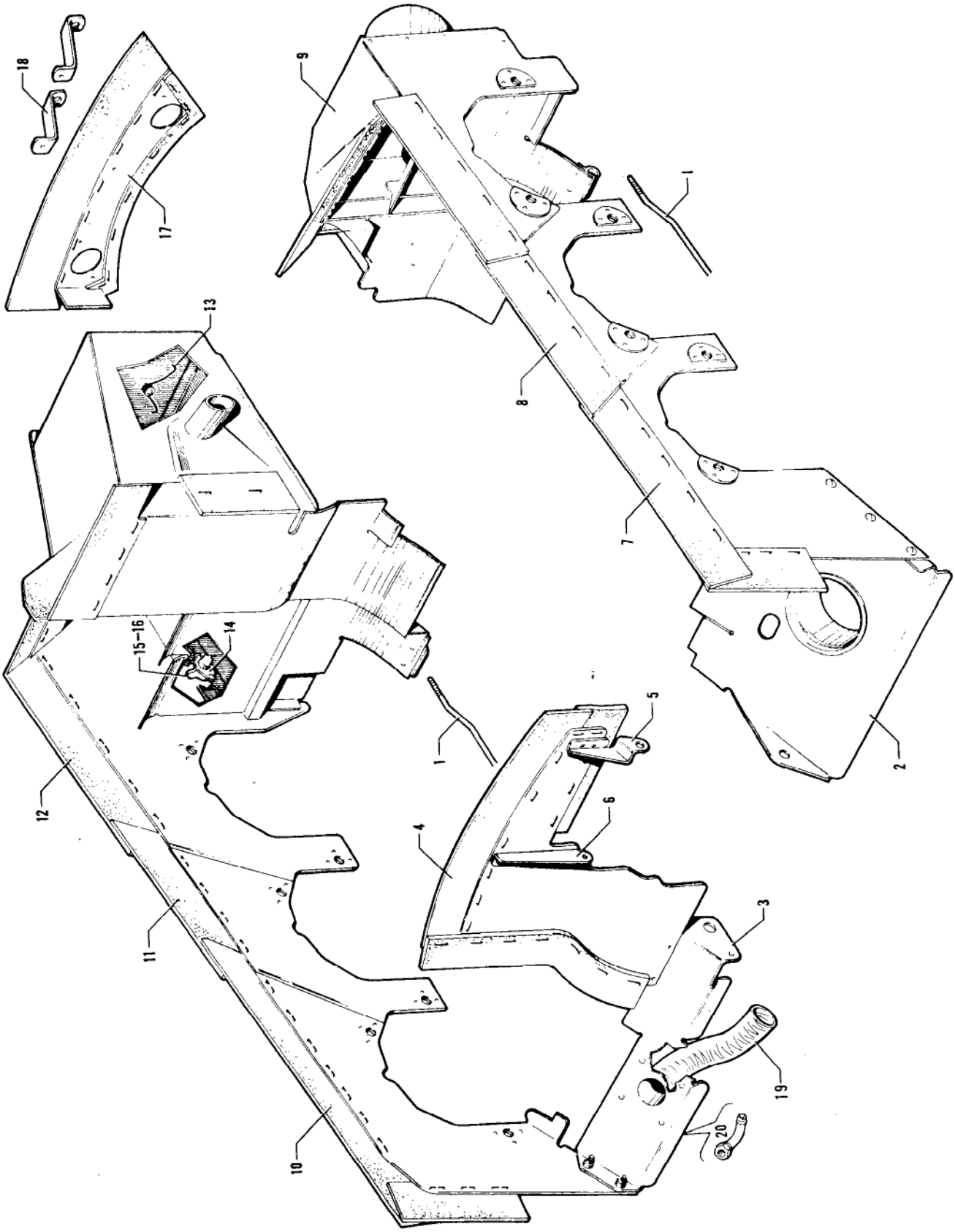

Figure 26B. Engine Baffle Installation
(Serial Nos. 24-4783, 24-4804 and up)

Figure and Index Number	Part Number	Code	NOMENCLATURE	No. Req.	SERIAL NUMBERS AFFECTED
26B-	26624		DRAWING - Baffle Installation		
-1	14513-02		ROD - Baffle tie rod	2	
-2	26567-00		BAFFLE ASSEMBLY - Left front	1	
-3	26650-00		BAFFLE ASSEMBLY - Right front	1	
-4	26238-00		BAFFLE ASSEMBLY - Center front	1	
-5	31360-02		BRACKET - Baffle attachment	1	
-6	31339-02		BRACKET - Baffle attachment	1	
-7	26512-00		BAFFLE ASSEMBLY - Left side, front	1	
-8	26477-00		BAFFLE ASSEMBLY - Left side, center	1	
-9	27723-00		BAFFLE ASSEMBLY - Left side, rear	1	
	26639-00	A	BAFFLE ASSEMBLY - Left side, rear	1	
-10	26544-00		BAFFLE ASSEMBLY - Right side, front	1	
-11	26478-00		BAFFLE ASSEMBLY - Right side, center	1	
-12	26497-16		BAFFLE ASSEMBLY - Right side, rear	1	
-13	26863-00		SPRING - Air filter retainer	2	
-14	484 342		RECEPTACLE - (#212-12D)	2	
-15	494 060		WASHER - (#2600-LW)	2	
-16	487 717		STUD - (#2600-4W)	2	
-17	26495-00		BAFFLE ASSEMBLY - Center rear	1	
-18	21146-00		LUG - Baffle attachment	2	
-19	22502-60		HOSE - Alternator air blast 13"	1	
-20	27146-00	A	TUBE ASSEMBLY - Boost reference	1	

A - Used if RaJay Turbocharger is installed.

When ordering, always specify Part Number, Description and Serial Number of Aircraft

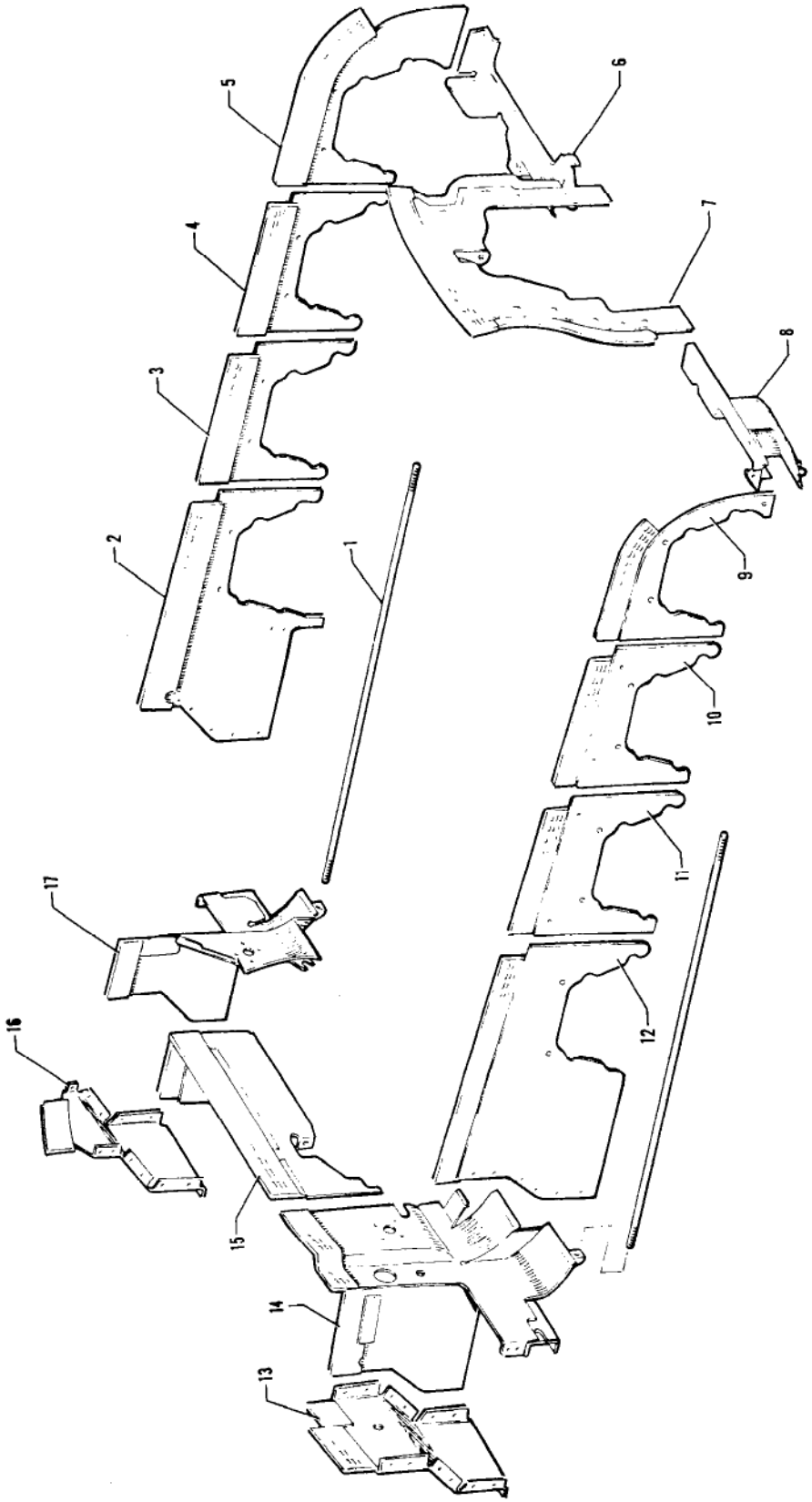

Figure 26C. Engine Baffle Installation "400"

Figure and Index Number	Part Number	Code	NOMENCLATURE	No. Req.	SERIAL NUMBERS AFFECTED
26C-	24593		DRAWING - Baffle Installation		
-1	22874-00		ROD - Baffle tie rod	2	
-2	22928-00		BAFFLE ASSEMBLY - Left side, rear	1	
-3	22929-00		BAFFLE ASSEMBLY - Left side, rear center	1	
-4	22930-00		BAFFLE ASSEMBLY - Left side, front center	1	
-5	24502-00		BAFFLE ASSEMBLY - Left side, front	1	
-6	24530-00		BAFFLE ASSEMBLY - Left front	1	
-7	22933-00		BAFFLE ASSEMBLY - Front center	1	
-8	24497-00		BAFFLE ASSEMBLY - Right front	1	
-9	24500-00		BAFFLE ASSEMBLY - Right side, front	1	
-10	22922-00		BAFFLE ASSEMBLY - Right side, front center	1	
-11	22923-00		BAFFLE ASSEMBLY - Right side, rear center	1	
-12	24498-00		BAFFLE ASSEMBLY - Right side, rear	1	
-13	24579-00		BAFFLE ASSEMBLY - Rear	1	
-14	24489-00		BAFFLE ASSEMBLY - Right rear	1	
-15	24476-00		BAFFLE ASSEMBLY - Rear center	1	
-16	24580-00		BAFFLE ASSEMBLY - Rear	1	
-17	24572-00		BAFFLE ASSEMBLY - Left rear	1	

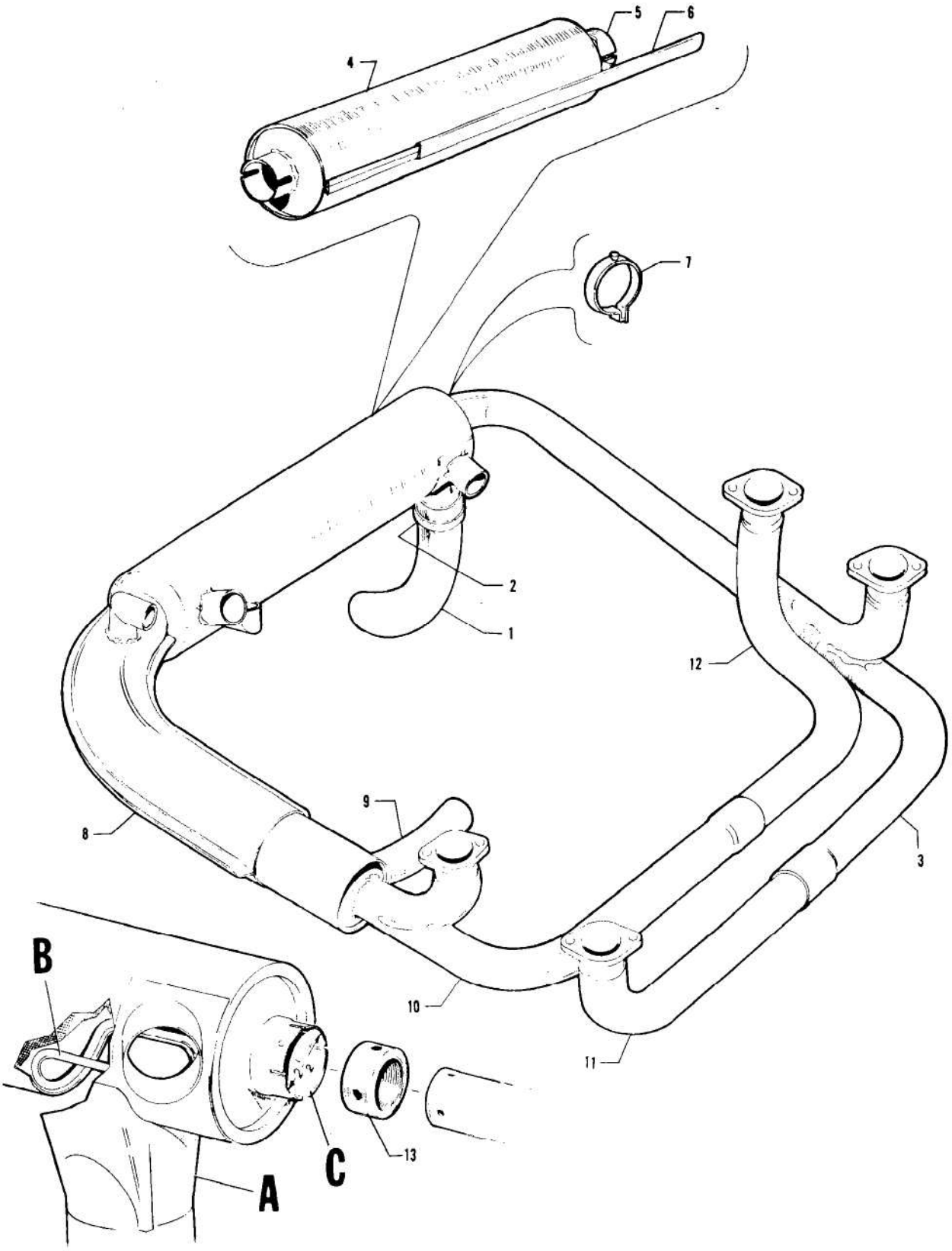

Figure 27. Engine Exhaust Installation "180"

Figure and Index Number	Part Number	Code	NOMENCLATURE	No. Req.	SERIAL NUMBERS AFFECTED
27-	21200		DRAWING - Exhaust System Installation		24-1 to 24-102 inclusive
	21629		DRAWING - Exhaust System Installation		24-103 to 24-1476 inclusive
	21961		DRAWING - Exhaust System Installation		24-1477 to 24-2174 inclusive, 24-2176 to 24-2298 inclusive
	22456		DRAWING - Exhaust System Installation		24-2175, 24-2299 and up
-1	21580-02		TUBE ASSEMBLY - Tail pipe	1	
-2	21167-00		CLAMP ASSEMBLY - Exhaust stack	1	
-3	21092-11		STACK ASSEMBLY - Engine exhaust, left front	1	24-1 to 24-279 inclusive
	21092-15		STACK ASSEMBLY - Engine exhaust, left front	1	24-280 and up
-4	23503-00		SHROUD ASSEMBLY - Muffler	1	24-1 to 24-102 inclusive
	23504-00	A	SHROUD ASSEMBLY - Muffler	1	
	23507-00	B	SHROUD ASSEMBLY - Muffler	1	
-5	22594-02	CD	MUFFLER ASSEMBLY	1	
-6	21247-00		CLIP ASSEMBLY - Muffler shroud	1	
-7	14235-00		CLAMP ASSEMBLY - (2 1/16" I.D.)	2	
	14235-08		CLAMP ASSEMBLY - (2 9/16" I.D.)	2	
-8	21165-02		SHROUD ASSEMBLY - Carburetor air, top	1	24-1 to 24-2174, 24-2176 to 24-2298 inclusive
	22093-00		SHROUD ASSEMBLY - Carburetor air, top	1	24-2175, 24-2299 and up
	21165-03		SHROUD ASSEMBLY - Carburetor air, bottom	1	
-9	72381-11		HOSE - Carburetor hot air intake (2" I.D.)	1	24-1 to 24-1476 inclusive
	10525-91		HOSE - Carburetor hot air intake (3" I.D.)	1	24-1477 and up
-10	21092-08		STACK ASSEMBLY - Engine exhaust, right rear	1	24-1 to 24-1476 inclusive
	21092-17		STACK ASSEMBLY - Engine exhaust, right rear	1	24-1477 and up
-11	21092-10		STACK ASSEMBLY - Engine exhaust, right front	1	24-1 to 24-279 inclusive
	21092-14		STACK ASSEMBLY - Engine exhaust, right front	1	24-280 and up
-12	21092-09		STACK ASSEMBLY - Engine exhaust, left rear	1	
-13	25017-00		BUSHING ASSEMBLY - Muffler adapter	2	

A - Used on airplanes with serial numbers 24-103 to 24-2174, 24-2176 to 24-2298 inclusive.

B - Used on airplanes with serial numbers 24-2175, 24-2299 and up.

C - When replacing a muffler that is not reinforced per View A on illustration, it is necessary to order a new reinforced muffler shroud per serial number if present shroud is not reinforced per View B on illustration.

D - If dimension at muffler take-off, per View C on illustration, is 2 1/2" I.D., order muffler assembly 24506-00.

When ordering, always specify Part Number, Description and Serial Number of Aircraft

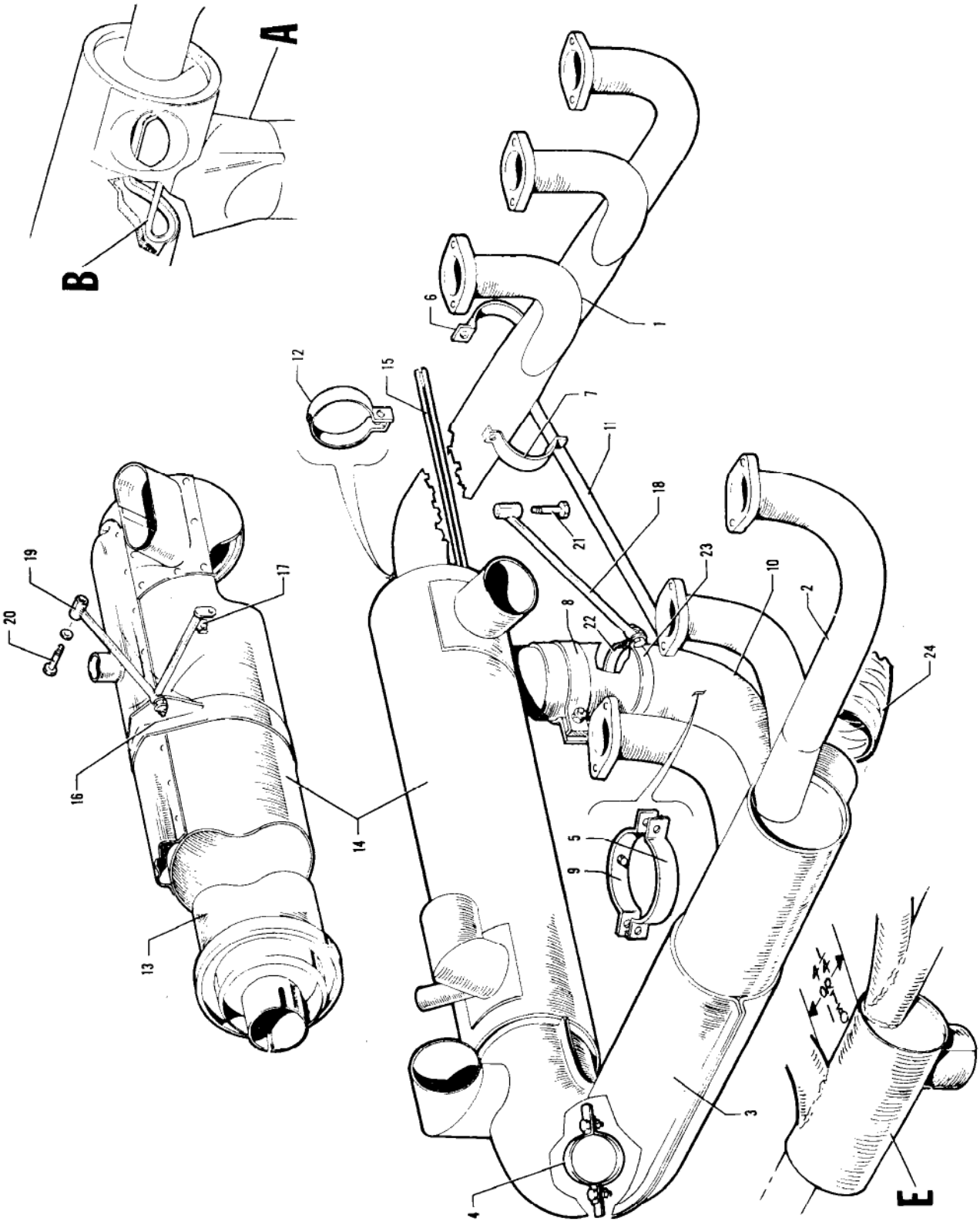

Figure 2-A. Engine Exhaust System Installation "250"

Figure and Index Number	Part Number	Code	NOMENCLATURE	No. Req.	SERIAL NUMBERS AFFECTED
27A-	21668		DRAWING - Exhaust System Installation		24-103 to 24-1476 inclusive
	21978		DRAWING - Exhaust System Installation		24-1477 to 24-2174, 24-2176 to 24-2298 inclusive
	22455		DRAWING - Exhaust System Installation		24-2299 and up
-1	21664-02		STACK ASSEMBLY - Engine exhaust, left	1	
-2	24543-00	BE	STACK ASSEMBLY - Engine exhaust, right (complete, with upper and lower shrouds)	1	
-3	756 777	C	SHROUD ASSEMBLY - (Upper and lower shrouds)	1	24-103 to 24-3380 inclusive
	756 778		SHROUD ASSEMBLY - (Upper and lower shrouds)	1	24-3381 and up
-4	24474-00		CLAMP - Exhaust stack shroud	2	
-5	21686-02		CLAMP - Tail pipe support	1	
-6	21685-04		CLAMP - Tail pipe brace, outboard	1	
-7	21685-02		CLAMP - Tail pipe brace, inboard	1	
-8	21167-00		CLAMP - Tail pipe	1	
-9	21686-04		CLAMP - Tail pipe support	1	24-103 to 24-1314 inclusive
	22020-00		CLAMP - Tail pipe support	1	24-1315 and up
-10	21580-00		TAIL PIPE	1	
-11	21194-02		TUBE - Tail pipe support	1	
-12	14235-08		CLAMP - Muffler	2	
-13	23159-00	AF	MUFFLER ASSEMBLY	1	24-103 to 24-3557 inclusive
	26385-00	E	MUFFLER ASSEMBLY	1	24-3558 and up
-14	23504-00		SHROUD ASSEMBLY - Muffler	1	24-103 to 24-2174, 24-2176 to 24-2298 inclusive
	23489-00		SHROUD ASSEMBLY - Muffler	1	24-2299 and up
-15	21247-00		CLIP ASSEMBLY - Muffler shroud	1	
-16	24387-00	D	CLAMP ASSEMBLY - Muffler support	1	
	25013-00	G	CLAMP ASSEMBLY - Muffler support	1	

A - When replacing a muffler that is not reinforced per View "A" on illustration, it is necessary to order a new reinforced muffler shroud, per serial numbers, if present shroud is not reinforced per View "B" on illustration.

B - Existing field stocks of exhaust stacks, part numbers 21664-03 and 23537-02 used on airplanes with serial numbers 24-103 to 24-3557 should be reworked in accordance with Service Letter No. 414.

C - See illustration. Refer to View "E" and order complete upper and lower shroud assembly 756 777 if dimension is 1-7/8" or order complete upper and lower shroud assembly 756 778 if dimension is 4-1/4". Refer to Service Letter No. 414.

D - Used on airplanes with serial numbers 24-2175, 24-2299 to 24-3464, 24 3466 to 24-3549, 24-3551 to 24-3557 if Kit 756 775 has been installed.

E - See Figure 24D if fuel injection is installed.

F - Not available, 26385-00 hollow type muffler will be supplied as a replacement. When this replacement is made, it will be necessary to comply with Service Letter No. 431.

G - Used on airplanes with serial numbers 24-103 to 24-2174 inclusive if Kit 757 058 has been installed.

Figure and Index Number	Part Number	Code	NOMENCLATURE	No. Req.	SERIAL NUMBERS AFFECTED
27A-17	10151-00	A	PLATE - Lock	1	
-18	24388-00	A	TUBE ASSEMBLY - Tailpipe support	1	
-19	24389-00	A	TUBE ASSEMBLY - Muffler support	1	
-20	24386-02	A	BOLT	1	
-21	24386-03	A	BOLT	1	
-22	21686-02	A	CLAMP - Tailpipe support	1	
-23	22020-00	A	CLAMP - Tailpipe support	1	
-24	10525-91		HOSE - Carburetor air intake	1	
			A - Used on airplanes with serial numbers 24-3322, 24-3395, 24-3438, 24-3442, 24-3445, 24-3458, 24-3461, 24-3465, 24-3485 to 24-3487, 24-3537, 24-3550, 24-3558 and up. Also used on airplanes with serial nos. not listed in preceding serial nos. if Kit 756 775 or Kit 757 058 has been installed.		

When ordering, always specify Part Number, Description and Serial Number of Aircraft

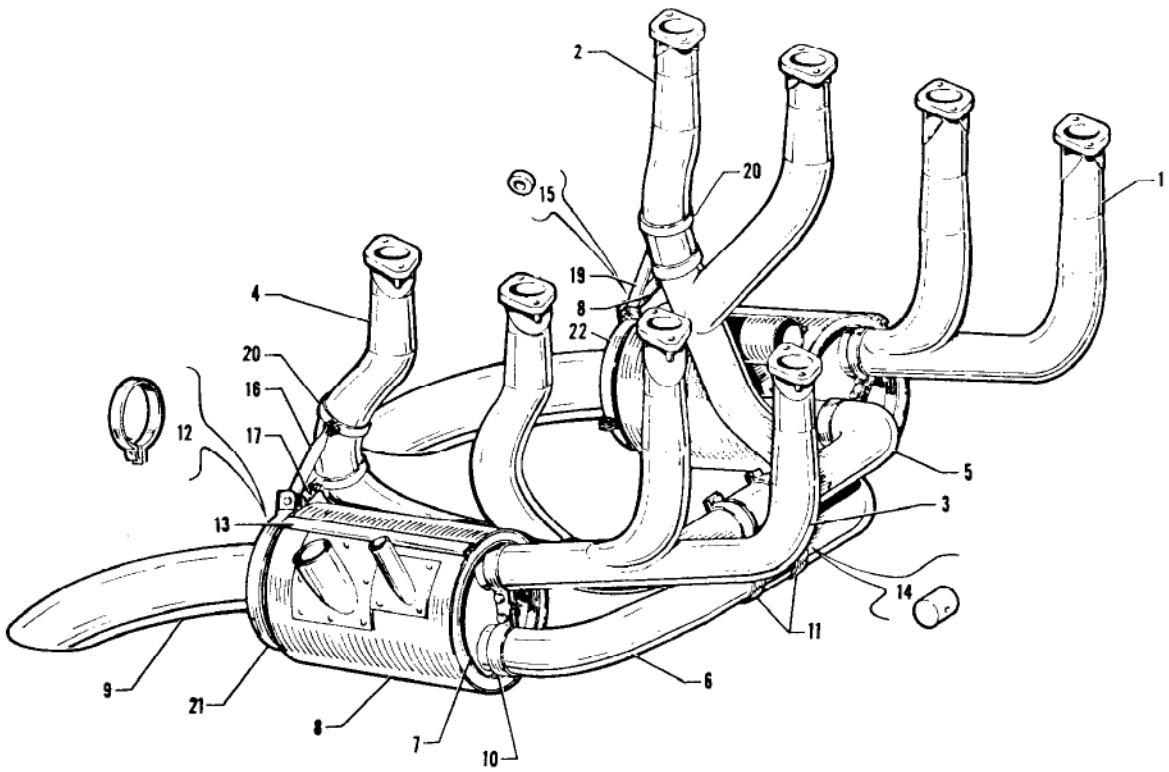

Figure 27B. Engine Exhaust System Installation "400"

Figure and Index Number	Part Number	Code	NOMENCLATURE	No. Req.	SERIAL NUMBERS AFFECTED
27B-	24537		DRAWING - Exhaust System Installation		
-1	23500-12		STACK ASSEMBLY - Left front	1	
-2	23500-14		STACK ASSEMBLY - Left rear	1	
-3	23500-13		STACK ASSEMBLY - Right front	1	
-4	23500-15		STACK ASSEMBLY - Right rear	1	
-5	23500-10		TUBE - Cross over, left	1	
-6	23500-11		TUBE - Cross over, right	1	
-7	24484-00		MUFFLER ASSEMBLY - Left	1	
	24484-01		MUFFLER ASSEMBLY - Right	1	
-8	24280-00		SHROUD ASSEMBLY - Left	1	
	24281-00		SHROUD ASSEMBLY - Right	1	
-9	24512-00		TAILPIPE - Left	1	
	24513-00		TAILPIPE - Right	1	
-10	24269-00		CLAMP ASSEMBLY - Exhaust stack	2	
-11	23499-00		CLAMP - Exhaust stack	2	
-12	21167-03		CLAMP - Tailpipe	2	
-13	24279-00		CLIP - Muffler shroud	2	
-14	23501-00		SPACER - Exhaust stack clamp	4	
-15	61402-72		BUSHING - Support tube spacer	2	
-16	24515-00		TUBE - Right muffler support	1	
-17	24516-00		TUBE - Right muffler support	1	
-18	24517-00		TUBE - Left muffler support	1	
-19	24518-00		TUBE - Left muffler support	1	
-20	80002-79		CLAMP - Muffler support tube	4	26-2 to 26-124 inclusive
	14235-12		CLAMP - Muffler support tube	4	26-125 and up
-21	24996-02		CLAMP - Muffler support tube, left	1	
	24996-03		CLAMP - Muffler support tube, right	1	
-22	24996-04		CLAMP - Muffler support tube, left	1	
	24996-05		CLAMP - Muffler support tube, right	1	

When ordering, always specify Part Number, Description and Serial Number of Aircraft

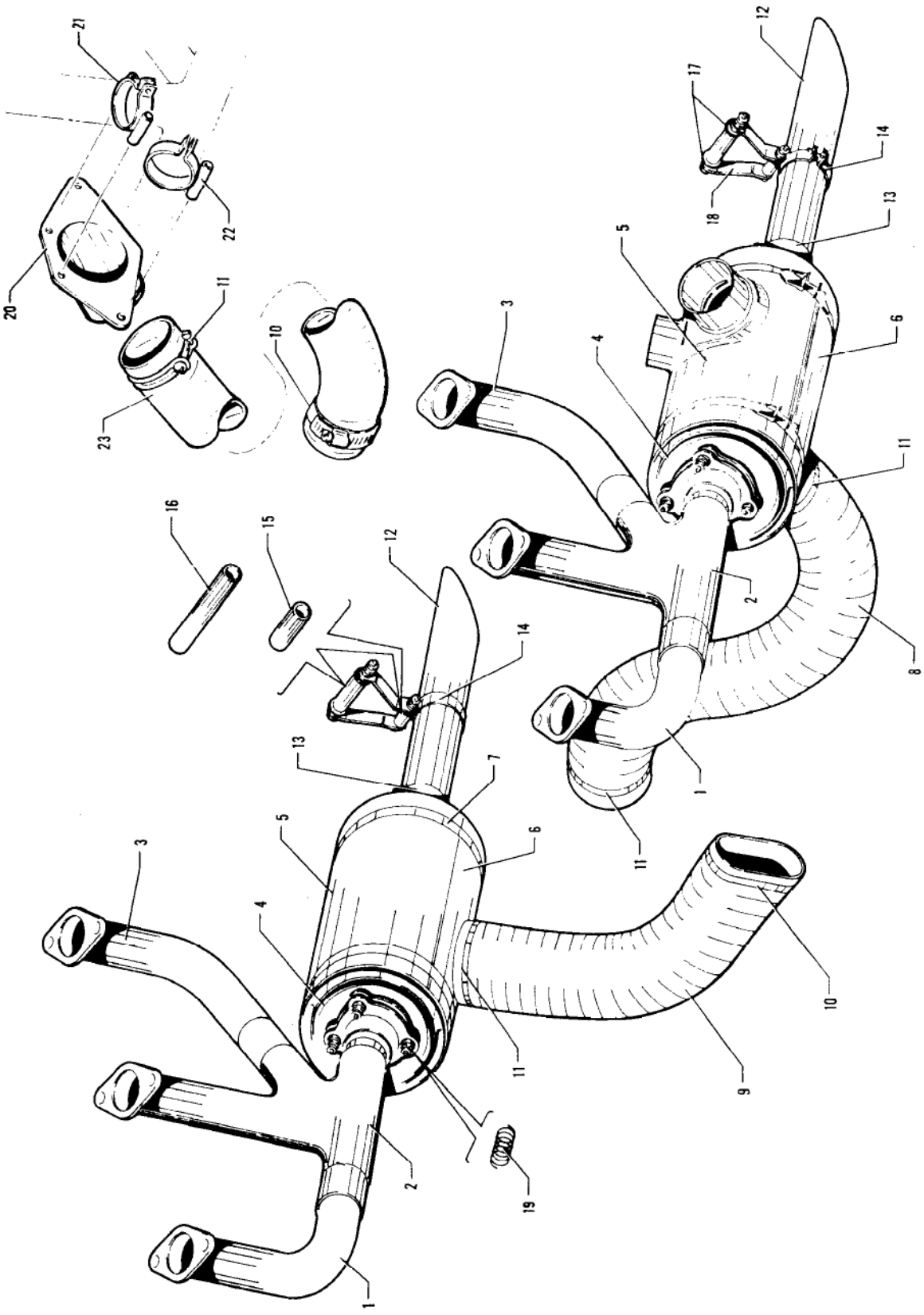

Figure 27C. Exhaust System Installation
(Serial Nos. 24-3642, 24-4000 to 24-4782, 24-4784 to 24-4803 inclusive)

Figure and Index Number	Part Number	Code	NOMENCLATURE	No. Req.	SERIAL NUMBERS AFFECTED
27C-	24883		DRAWING - Exhaust System Installation		
-1	24770-06		STACK ASSEMBLY - Engine exhaust, front	2	
-2	24770-04		STACK ASSEMBLY - Engine exhaust, center	2	
-3	24770-08		STACK ASSEMBLY - Engine exhaust, rear	2	
-4	26345-05	B	MUFFLER ASSEMBLY	2	
-5	24861-00		SHROUD ASSEMBLY - Muffler, upper, left	1	
	24862-01		SHROUD ASSEMBLY - Muffler, upper, right	1	
-6	24862-00		SHROUD ASSEMBLY - Muffler, lower	2	
-7	554 824		CLAMP - Muffler (#S.5-9160)	4	
-8	10525-61		HOSE - Air duct, muffler, left	1	
-9	22502-18		HOSE - Air duct, muffler, right	1	
-10	454 548		CLAMP - Air duct (#E45)	2	
-11	454 864		CLAMP - Air duct (#H3-1800)	4	
-12	24787-02		TAIL PIPE - L.H.	1	
	24787-03		TAIL PIPE - R.H.	1	
-13	24788-00		CLAMP ASSEMBLY - Tail pipe	2	
-14	24791-00		CLAMP ASSEMBLY - Tail pipe support	2	
-15	82732-103		BUSHING - Tail pipe hanger	2	
-16	82732-102		BUSHING - Tail pipe hanger	2	
-17	24820-00		BUSHING - Tail pipe hanger	4	
-18	24793-03		STRAP - Tail pipe hanger, left	2	
	24793-02		STRAP - Tail pipe hanger, right	2	
-19	487 437		SPRING - (#186-218)	6	
-20	25260-00		SHROUD ASSEMBLY - Carburetor air	1	24-4212 and up
-21	25261-02		CLAMP ASSEMBLY - Carburetor air shroud	1	24-4212 and up
-22	25261-03		CLAMP ASSEMBLY - Carburetor air shroud	1	24-4212 and up
-23	22502-63		HOSE - Carburetor air shroud	1	24-4212 and up

A - Used on airplanes with serial numbers 24-3642, 24-4000 to 24-4782, 24-4784 to 24-4803 inclusive.
B - See Figure 24E if fuel injection is installed.

When ordering, always specify Part Number, Description and Serial Number of Aircraft

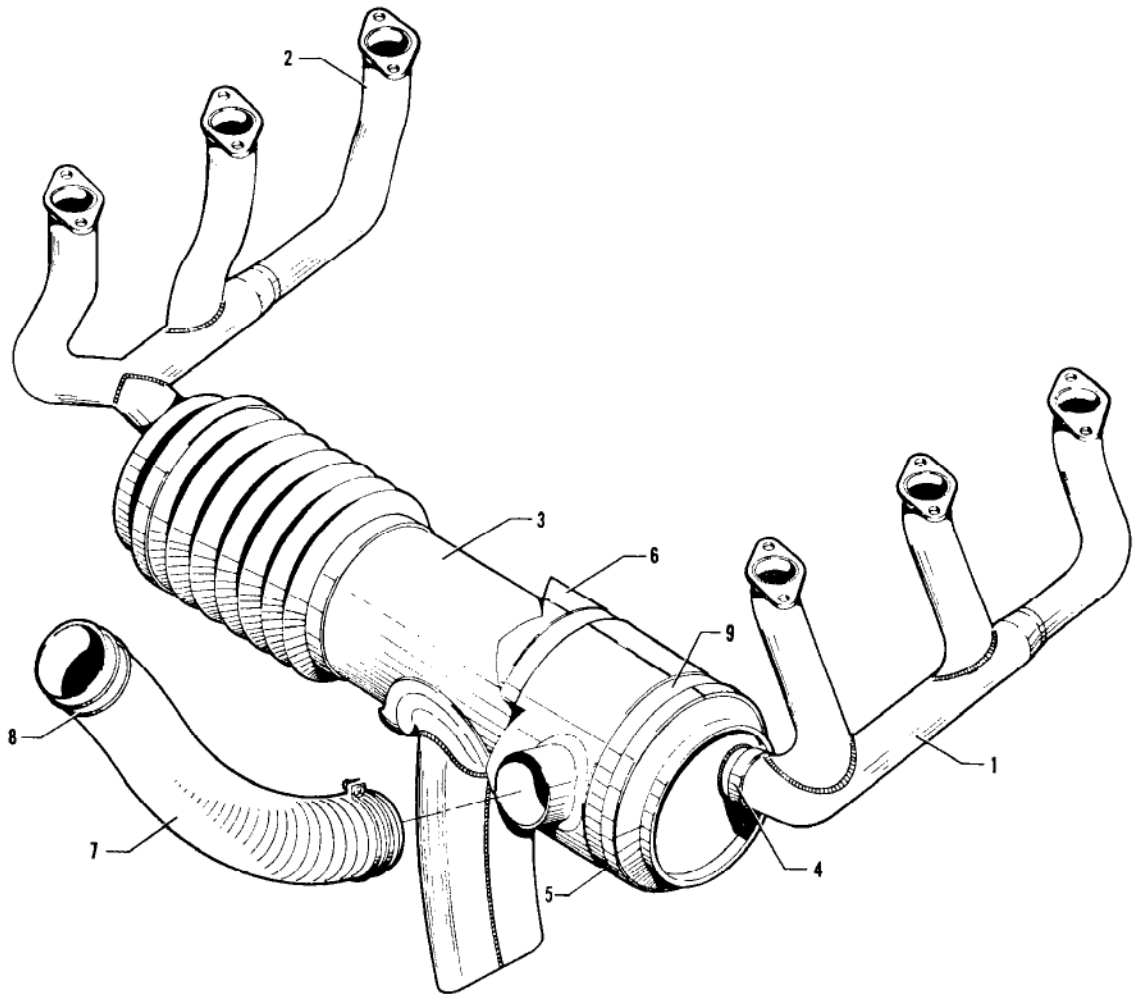

Figure 27D. Exhaust System Installation
(Serial Nos. 24-4783, 24-4804 and up)

Figure and Index Number	Part Number	Code	NOMENCLATURE	No. Req.	SERIAL NUMBERS AFFECTED
27D-	26607		DRAWING - Exhaust System Installation		
	26847		DRAWING - Heater System Installation		
-1	26829-00		STACK ASSEMBLY - Exhaust, left side	1	
-2	26830-00		STACK ASSEMBLY - Exhaust, right side	1	
-3	27235-00	A	MUFFLER ASSEMBLY	1	
-4	14235-00		CLAMP - Muffler assembly	1	
-5	26853-00	A	SHROUD ASSEMBLY - Muffler, front	1	
-6	26990-00	A	SHROUD ASSEMBLY - Muffler, rear	1	
-7	29998-02		HOSE - Air duct	1	
-8	454 993		CLAMP - (#H3-1160)	2	
-9	26901-00	A	CLAMP - Muffler shroud	4	

A - Not used when RaJay Turbocharger is installed. Refer to Figure 24G or RaJay Corporation Parts Catalog for component parts.

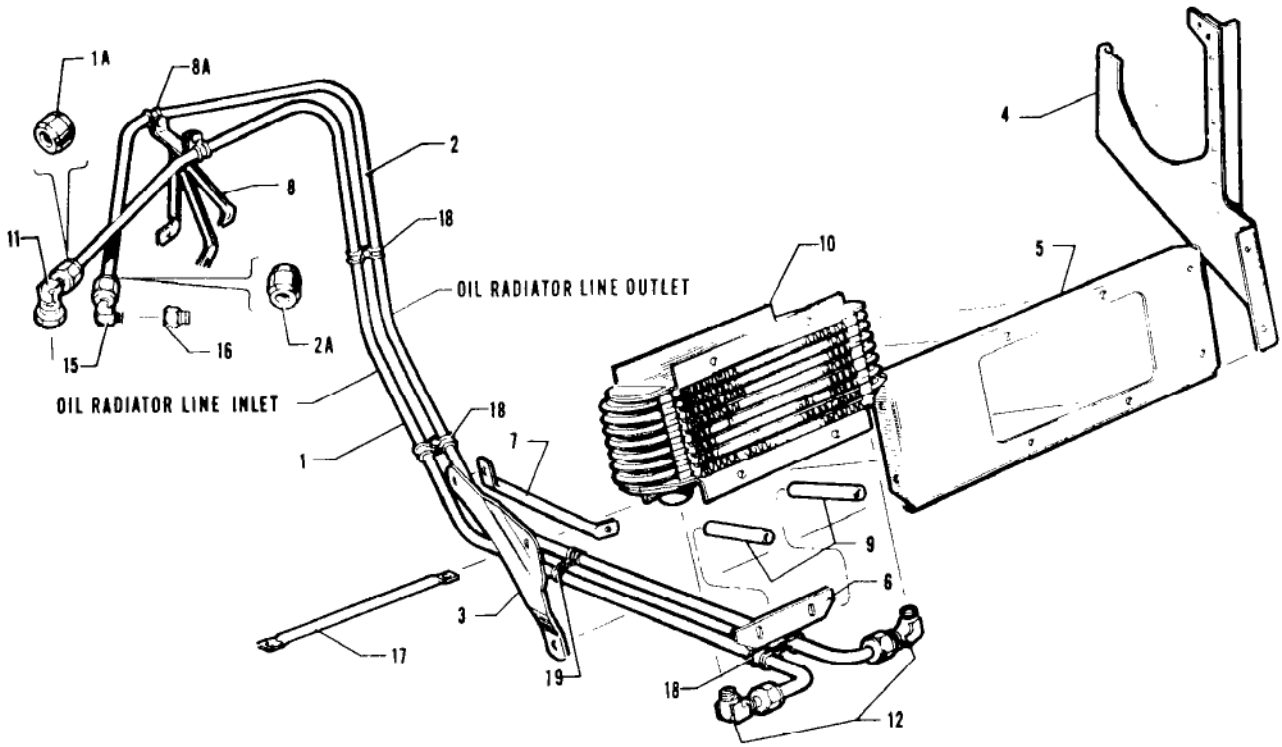

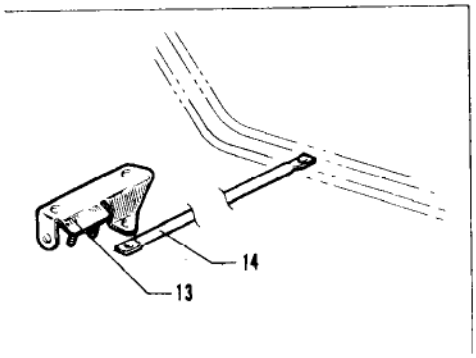

Figure 28. Oil Radiator Installation
(PA-24-180 and PA-24-250 - Serial Nos. 24-1 and up)
(PA-24-260 - Serial Nos. 24-3642, 24-4000 to 24-4782, 24-4784 to 24-4803 inclusive)

Figure and Index Number	Part Number	Code	NOMENCLATURE	No. Req.	SERIAL NUMBERS AFFECTED
28-	21188		DRAWING - Oil Radiator Installation "180"		
	21682		DRAWING - Oil Radiator Installation "250" & "260"		
-1	21179-00		LINE ASSEMBLY - Oil radiator inlet "180"	1	
	21593-00		LINE ASSEMBLY - Oil radiator inlet "250"	1	
	24885-00		LINE ASSEMBLY - Oil radiator inlet "260"	1	
-1a	484 654		RING - Seal, oil radiator lines (#110-8-Y)	1	
-2	21180-00		LINE ASSEMBLY - Oil radiator outlet "180"	1	
	21592-00		LINE ASSEMBLY - Oil radiator outlet "250"	1	
	24884-00		LINE ASSEMBLY - Oil radiator outlet "260"	1	
-2a	484 654		RING - Seal, oil radiator lines (#110-8-Y)	1	
-3	21182-00		BRACKET - Oil radiator inner support	1	
-4	21183-00		BRACKET - Oil radiator outer support	1	
-5	21184-00		BRACKET - Oil radiator mounting	1	
-6	21185-00		BRACKET - Oil radiator line support "180"	1	24-1 to 24-246 inclusive
-7	21186-00		TUBE - Oil radiator support "180"	1	
	21186-00		TUBE - Oil radiator support "250"	1	24-105 to 24-1329 inclusive
	22108-00		TUBE ASSEMBLY - Oil radiator support "250" & "260"	1	24-1330 and up
-8	21187-00		BRACKET ASSEMBLY - Oil radiator line rear support "180"	1	24-1 to 24-246 inclusive
-8a	454 933		CLAMP - (PS10017-2-8)	2	24-1 to 24-246 inclusive
-9	86062-94		TUBE - Spacer	4	
-10	18622-00		COOLER ASSEMBLY - Oil	1	
-11	458 932		ELBOW - Brass (#1100-8) outlet	1	
-12	458 931		ELBOW - Steel (#905-8)	2	
-13	21519-00		BRACKET ASSEMBLY - Carburetor control attachment "250" & "260"	1	
-14	21562-00		TUBE - Oil radiator line support "250" & "260"	1	
-15	458 931		ELBOW - Steel (#905-8) inlet, "250" & "260"	1	
	458 932		ELBOW - Brass (#1100-8) inlet, "180"	1	
-16	451 855		ADAPTER - (W/H #3200-6) "250" & "260"	1	
-17	21767-00		TUBE - Oil line support "180"	1	24-247 and up
-18	454 933		CLAMP - (PS10017-2-8)	6	
-19	454 933		CLAMP - (PS10017-2-8) "250" & "260"	2	

A - Used on PA-24-180 and PA-24-250 with serial numbers 24-1 and up, PA-24-260 with serial numbers 24-3642, 24-4000 to 24-4782 inclusive, 24-4784 to 24-4803 inclusive.

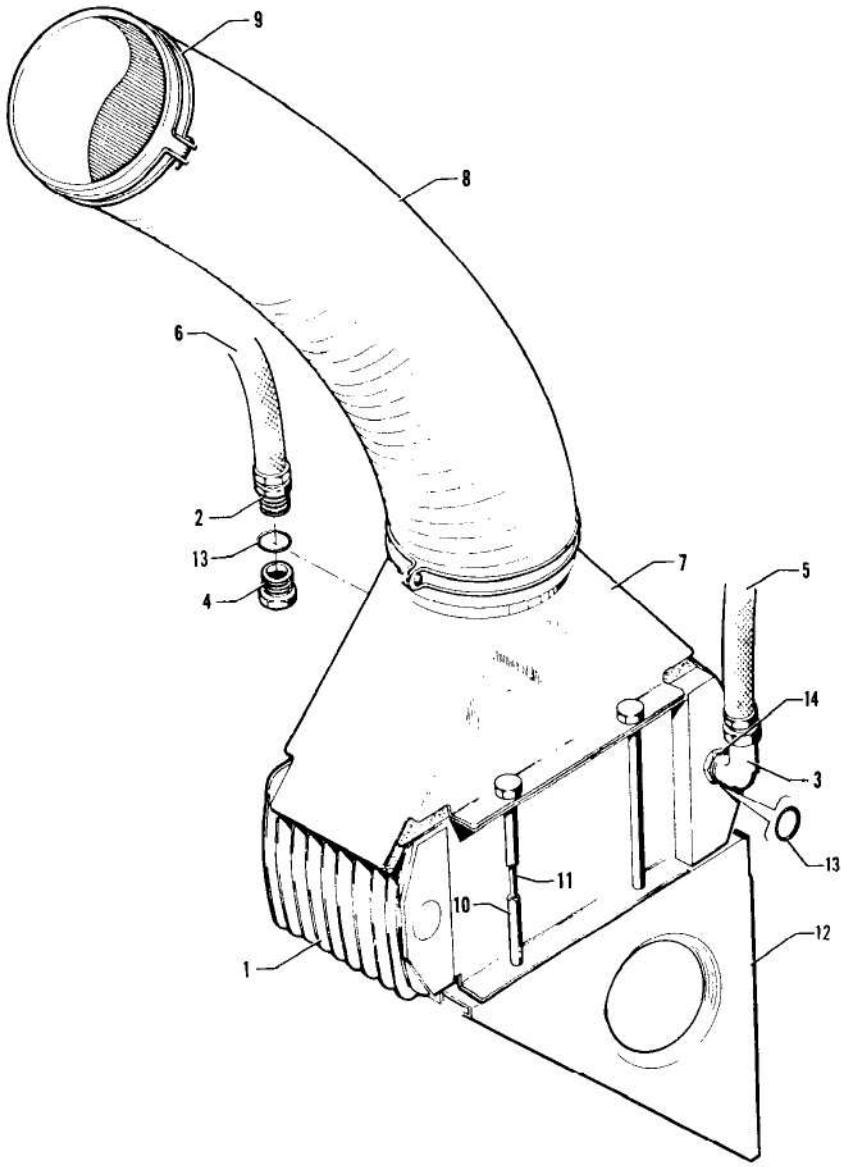

Figure 28A. Oil Radiator Installation
(Serial Nos. 24-4783, 24-4804 and up)

Figure and Index Number	Part Number	Code	NOMENCLATURE	No. Req.	SERIAL NUMBERS AFFECTED
28A-	26315		DRAWING - Power Plant Installation		
-1	32912-00		COOLER ASSEMBLY - Oil	1	
	43378-00	A	COOLER ASSEMBLY - Oil	1	
-2	476 664	B	NIPPLE - (AN816-8D)	1	
-3	458 898		ELBOW - (AN822-8D)	1	
	458 905	A	ELBOW - (AN833-8D)	1	
-4	460 670		PLUG - (W/H 3152 x 6)	1	
	458 905	A	ELBOW - (AN833-8D)	1	
-5	17766-47		HOSE ASSEMBLY - Oil radiator outlet	1	
-6	17766-48		HOSE ASSEMBLY - Oil radiator inlet	1	
	17766-49	A	HOSE ASSEMBLY - Oil radiator inlet	1	
-7	64224-03	B	DUCT ASSEMBLY - Oil radiator	1	
-8	22502 55		HOSE - Air duct	1	
-9	454 816		CLAMP - (H4-0000)	2	
-10	86062-94		TUBE - Spacer	4	
-11	400 463		BOLT - (AN3-40A)	4	
	407 564		WASHER - (AN960-10)	4	
	404 887		NUT - (MS20365 1032C)	4	
-12	26381-01		BRACKET - Oil cooler support	2	
-13	462 031	A	"O" RING - (AN6290-8)	2	
-14	477 621	A	NUT - (AN924-8D)	2	

A - Used if RaJay Turbocharger is installed.
B - Not used when RaJay Turbocharger is installed. Refer to Figure 24G or RaJay Corporation Parts Catalog for component parts.

When ordering, always specify Part Number, Description and Serial Number of Aircraft

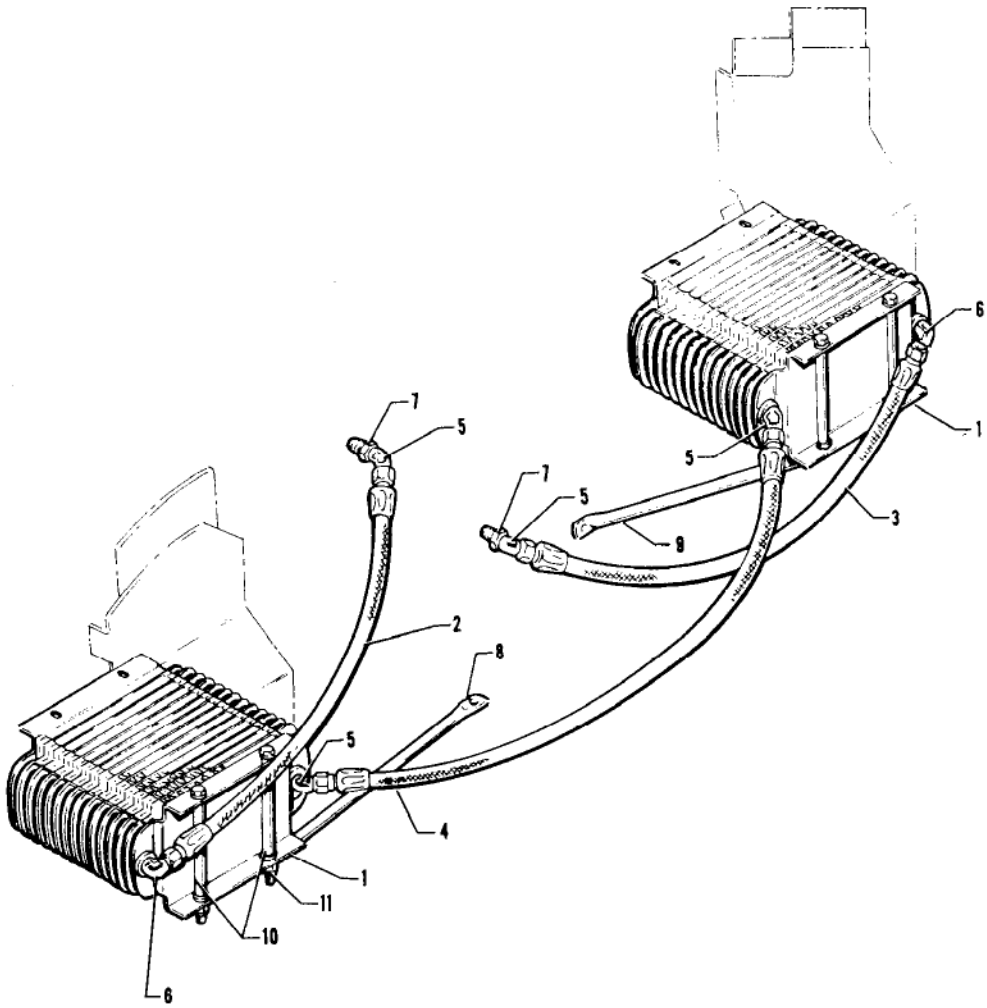

Figure 28B. Oil Radiator Installation "400"

Figure and Index Number	Part Number	Code	NOMENCLATURE	No. Req.	SERIAL NUMBERS AFFECTED
28B-	24565		DRAWING - Oil Radiator Installation		
-1	24577-00		COOLER ASSEMBLY - Oil	2	
-2	17766-82		HOSE ASSEMBLY - Engine to radiator, left	1	
-3	17766-83		HOSE ASSEMBLY - Engine to radiator, right	1	
-4	17766-47		HOSE ASSEMBLY - Radiator to radiator	1	
-5	458 886		ELBOW - (AN823-8D)	4	
-6	458 898		ELBOW - (AN822-8D)	2	
-7	453 656		BUSHING - (AN912-4D)	2	
-8	24563-00		BRACKET - Oil cooler support, left	1	
-9	24564-00		BRACKET - Oil cooler support, right	1	
-10	86142-41		TUBE - Spacer	8	
-11	400 464		BOLT - (AN3-41A)	8	
	407 564		WASHER - (AN960-10)	28	
	404 835		NUT - (MS20364-1032C)	8	

When ordering, always specify Part Number, Description and Serial Number of Aircraft

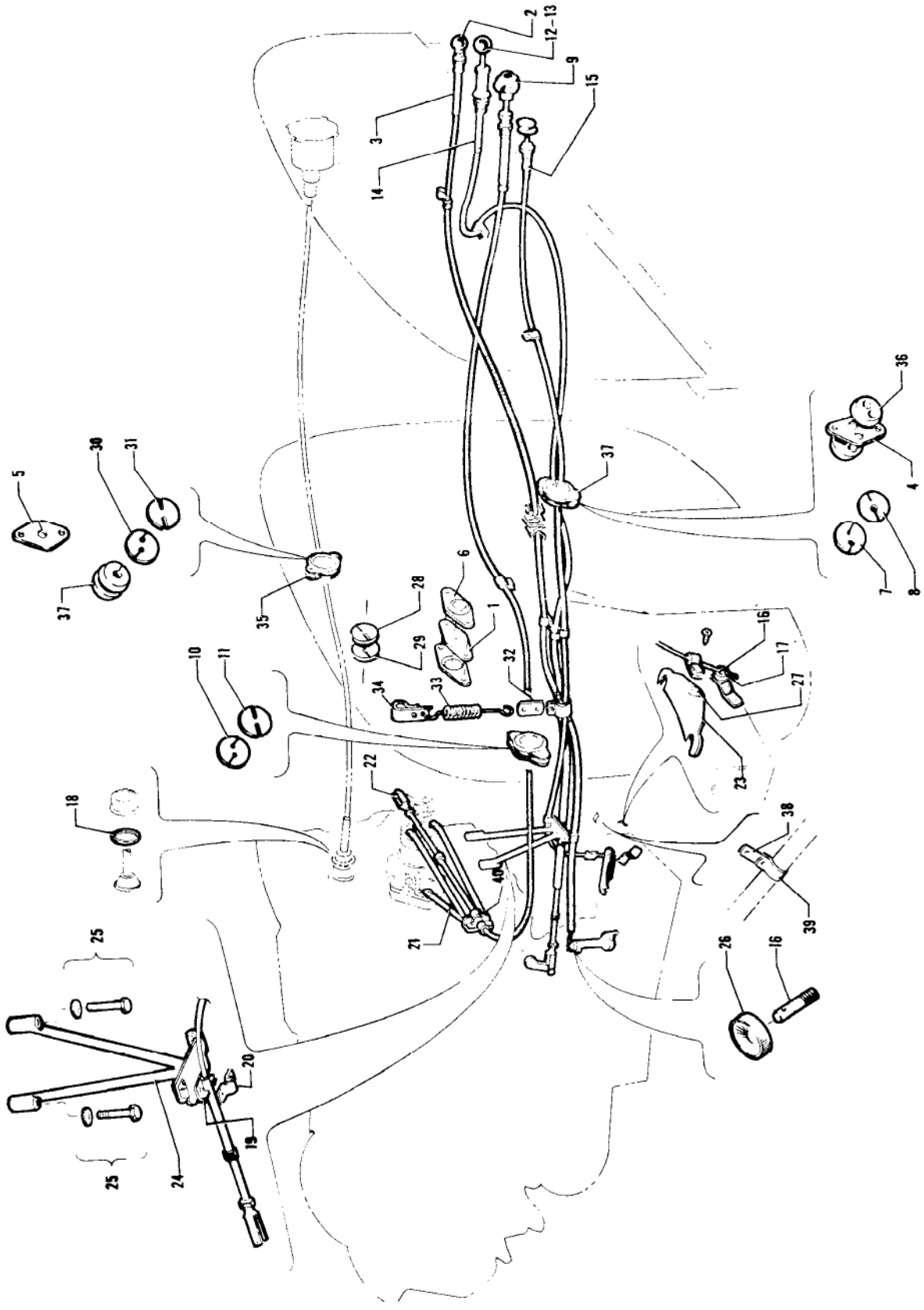

Figure 29. Engine Controls Installation
(PA-24-180 and PA-24-250 - Serial Nos. 24-1 and up)
(PA-24-260 - Serial Nos. 24-3642, 24-4000 to 24-4782, 24-4784 to 24-4803 inclusive)

Figure and Index Number	Part Number	Code	NOMENCLATURE	No. Req.	SERIAL NUMBERS AFFECTED
29-	21193		DRAWING - Engine Controls Installation "180"		24-1 to 24-102 inclusive
	21618		DRAWING - Engine Controls Installation "180"		24-103 to 24-2174 inclusive, 24-2176 to 24-2298 inclusive
	22414		DRAWING - Engine Controls Installation "180"		24-2175, 24-2299 and up
	21672		DRAWING - Engine Controls Installation "250"		24-105 to 24-2174 inclusive, 24-2176 to 24-2298 inclusive
	22415		DRAWING - Engine Controls Installation "250"		24-2175, 24-2299 and up
	24925		DRAWING - Engine Controls Installation "260"		24-3642, 24-4000 to 24-4246 incl., 24-4248 to 24-4299 inclusive
	25582		DRAWING - Engine Controls Installation "260"		24-4247, 24-4300 and up
-1	22105-03		GASKET - Firewall seal	1	24-4247, 24-4300 and up
-2	18875-08		KNOB - Control, red	1	
-3	41481-16		CONTROL ASSEMBLY - Mixture	1	24-1 to 24-1329 inclusive
	16775-00		CONTROL ASSEMBLY - Mixture	1	24-1330 to 24-2969 inclusive
	23177-00		CONTROL ASSEMBLY - Mixture	1	24-2970 and up
-4	22105-04		GASKET - Firewall seal	1	24-2202 and up
-5	22105-05		GASKET - Firewall seal	1	24-2202 and up
-6	22104-03		GROMMET - Firewall seal	2	24-4247, 24-4300 and up
-7	21249-06		DISC - Firewall seal, forward	1	
-8	21249-12		DISC - Firewall seal, aft	1	
-9	455 181		CONTROL ASSEMBLY - Prop governor, "180" (3V700-1075-58-1/4) 58-1/4"	1	24-1 to 24-2174 inclusive, 24-2176 to 24-2298 inclusive
	455 236		CONTROL ASSEMBLY - Prop governor, "180" (40611-2-42) 42"	1	24-2175, 24-2299 and up
	455 184		CONTROL ASSEMBLY - Prop governor, "250" (3V700-1075-83) 83"	1	24-105 to 24-2174 inclusive, 24-2176 to 24-2298 inclusive
	22633-02		CONTROL ASSEMBLY - Prop governor, "250" & "260" (40611-1-68-3/8) 68-3/8"	1	24-2175, 24-2299 and up
-10	22498-00		DISC - Firewall seal, aft	1	
-11	22498-00		DISC - Firewall seal, aft	1	
-12	18875-07		KNOB - Throttle control, black	1	
-13	11789-00		BUSHING - Knob insert	1	
-14	455 182		CONTROL ASSEMBLY - Throttle (3-D-638-1183-1)	1	24-1 to 24-102 inclusive
	455 185		CONTROL ASSEMBLY - Throttle (3-D-638-1183-2) "180" & "250"	1	24-103 and up
	455 185		CONTROL ASSEMBLY - Throttle (3-D-638-1183-2) "260"	1	24-3642, 24-4000 to 24-4381 incl.
	455 299		CONTROL ASSEMBLY - Throttle (26341-00) "260"	1	24-4382 and up
-15	455 177		CONTROL ASSEMBLY - Carburetor heat (F21020-65)	1	
-16	70371-03		STUD - Swivel	2	
-17	70371-02		FITTING - Swivel	1	
-18	85012-14		WASHER	1	
-19	18132-00		LUG - "180"	1	
	18132-02		LUG - "250" & "260"	1	
-20	18219-00		CLAMP - "250" & "260"	2	
	18219-02		CLAMP - "250" & "260"	2	
-21	21192-00		BRACKET ASSEMBLY - Prop control support "180"	1	24-1 to 24-2174 inclusive, 24-2176 to 24-2298 inclusive
	22475-00		BRACKET ASSEMBLY - Prop control support "180"	1	24-2175, 24-2299 and up

A - Used on PA-24-180 and PA-24-250 with serial numbers 24-1 and up, PA-24-260 with serial numbers 24-3642, 24-4000 to 24-4782, 24-4784 to 24-4803 inclusive.

When ordering, always specify Part Number, Description and Serial Number of Aircraft

Figure and Index Number	Part Number	Code	NOMENCLATURE	No. Req.	SERIAL NUMBERS AFFECTED
29-22	554 757	E	CLEVIS - (MS35812-1) "180" & "250"	1	
	19987-00	D	JOINT - Ball (469 137) "180" & "250"	1	
	31747-00		JOINT - Ball (469 141) "260"	1	
-23	21177-00		BRACKET ASSEMBLY - Carburetor heat control	1	
-24	21189-00		BRACKET ASSEMBLY - Engine control bracket	1	
-25	418 430		SCREW - Cap (MS35291-15)	2	
-26	91193-00		FITTING - Swivel	1	
-27	14843-73		BUSHING	1	
-28	21249-02	C	DISC - Firewall seal, forward	1	
	21249-03	B	DISC - Firewall seal, forward	1	
-29	21249-08	C	DISC - Firewall seal, aft	1	
	21249-09	B	DISC - Firewall seal, aft	1	
-30	21249-05	C	DISC - Firewall seal, forward	1	
	21249-04	B	DISC - Firewall seal, forward	1	
-31	21249-11	C	DISC - Firewall seal, aft	1	
	21249-10	B	DISC - Firewall seal, aft	1	
-32	81262-83		LINK - Cable support "180"	1	24-103 and up
	81262-83		LINK - Cable support "250"	1	24-105 to 24-1329 inclusive
-33	21625-00		SPRING - Cable support "180" (8-13/16")	1	24-103 to 24-2174 inclusive, 24-2176 to 24-2298 inclusive
	83302-32		SPRING - Cable support "180" (3-11/16")	1	24-2175, 24-2299 and up
	83302-32		SPRING - Cable support "250" (3-11/16")	1	24-105 to 24-1329 inclusive
-34	21624-00		CLAMP - Cable support "180"	1	24-103 and up
	21624-02		CLAMP - Cable support "250"	1	24-105 to 24-1329 inclusive
-35	22103-02		PLATE - Firewall seal grommet	4	24-2202 and up
-36	22104-05		GROMMET - Firewall seal	2	24-2202 and up
	22104-11	F	GROMMET - Firewall seal	2	
-37	22104-07		GROMMET - Firewall seal	2	24-2202 and up
-38	60054-16		LINK - Control cable support "260"	1	24-3642, 24-4000 to 24-4286 incl., 24-4288 to 24-4299 inclusive
-39	80002-54		CLAMP - Control cable support link "260"	1	24-3642, 24-4000 to 24-4286 incl., 24-4288 to 24-4299 inclusive
-40	18219-02		CLAMP - "180"	1	

A - Used on PA-24-180 and PA-24-250 with serial numbers 24-1 and up, PA-24-260 with serial numbers 24-3642, 24-4000 to 24-4782 inclusive, 24-4784 to 24-4803 inclusive.
B - Used when tachometer shaft is installed on right side of firewall.
C - Used when tachometer shaft is installed on left side of firewall.
D - Used when Hartzell Governor is installed.
E - Used when Woodward Governor is installed.
F - Used on PA-24-260 fuel injected models when Heated Alternate Air Induction Kit is installed.

When ordering, always specify Part Number, Description and Serial Number of Aircraft



Figure 29A. Engine Controls Installation
(Serial Nos. 24-4783, 24-4804 and up)

Figure and Index Number	Part Number	Code	NOMENCLATURE	No. Req.	SERIAL NUMBERS AFFECTED
29A-	26625		DRAWING - Engine Controls Installation		
-1	26809-00		QUADRANT ASSEMBLY	1	
-2	26612-02	A	COVER - Quadrant, black	1	
	26612-03	A	COVER - Quadrant, white	1	
	26612-04	A	COVER - Quadrant, beige	1	
-3	26600-00	A	PLACARD - Mixture, throttle and propeller	1	
-4	487 804		SWITCH - Limit (MS25253-1)	1	
-5	67212-00		KNOB - Throttle control	1	
-6	24047-00		KNOB - Propeller control	1	
-7	24048-00		KNOB - Mixture control	1	
-8	571 107		KNOB - (#254)	1	
-9	17852-02		PLATE - Friction	4	
-10	17852-03		PLATE - Friction	2	
-11	24154-00		PLATE - Switch insulator	1	
-12	26501-00		PLATE ASSEMBLY - Quadrant, right	1	
	26501-01		PLATE ASSEMBLY - Quadrant, left	1	
-13	451 840		ACTUATOR - (#JV-1)	1	
-14	26421-03		SHAFT ASSEMBLY - Quadrant	1	
-15	24161-02		PIN - Quadrant	2	
-16	26377-00		SEGMENT - Control quadrant, outside	2	
-17	26380-00		SEGMENT - Control quadrant, inside	2	
-18	26489-00		SPACER - Quadrant	2	
-19	26491-00	A	BRACKET - Quadrant lever stop	1	
-20	39994-04		BUSHING	1	
-21	49999-05		BUSHING	1	
-22	49999-06		BUSHING	1	
-23	80022-100		BUSHING	6	
-24	80122-119		WASHER - Quadrant, left	1	
	80122-120		WASHER - Quadrant, right	1	
-25	407 566		WASHER - (AN960-516)	1	
-26	408 827		WASHER - Shake proof (#3502-18-36)	1	
-27	23738-07		LEVER ASSEMBLY - Propeller control	1	
-28	23737-00		BEARING	1	
-29	23740-09		LEVER ASSEMBLY - Mixture control	1	
-30	23737-00		BEARING	1	
-31	24122-04		LEVER ASSEMBLY - Throttle control, complete	1	
-32	26556-00		LEVER ASSEMBLY - Throttle control	1	
-33	23737-00		BEARING	1	
-34	24120-04		PLATE - Throttle switch actuator	2	
-35	61402-64		BUSHING	2	
-36	26828-00		PLACARD - Cowl flap	1	
-37	70371-00		FITTING ASSEMBLY - Injector heat control cable	1	
-38	86092-82		PIN - Control cable	3	
-39	453 664		BUTTON - Plug (#SS-48192)	1	
-40	18132-02		LUG - Control cable support bracket	1	
-41	18219-02		CLAMP - Control cable attachment	5	
-42	22103-02		PLATE - Firewall seal grommet	2	
	22104-07		GROMMET - Firewall seal	2	
	22105-05		GASKET - Firewall seal	1	

A - Not used when RaJay Turbocharger is installed.

When ordering, always specify Part Number, Description and Serial Number of Aircraft

Figure and Index Number	Part Number	Code	NOMENCLATURE	No. Req.	SERIAL NUMBERS AFFECTED
29A-43	481 062		HOLDER - Grommet (#MT-340)	4	
	22104-03		GROMMET - Firewall seal	4	
	22105-03		GASKET - Firewall seal	2	
-44	481 062		HOLDER - Grommet (#MT-340)	2	
	22104-05		GROMMET - Firewall seal	2	
	22105-04		GASKET - Firewall seal	1	
-45	22103-02		PLATE - Firewall seal grommet	2	
	481 062		HOLDER - Grommet (#MT-340)	2	
	22104-05		GROMMET - Firewall seal	2	
	22105-04		GASKET - Firewall seal	1	
-46	23296-00		BRACKET ASSEMBLY - Mixture control support	1	
-47	24049-00		KNOB - Cowl flap control	1	
-48	26881-00		LEVER ASSEMBLY - Cowl flap control	1	
-49	23737-00		BEARING	1	
-50	24894-12		CABLE ASSEMBLY - Throttle control	1	
-51	24894-13		CABLE ASSEMBLY - Mixture control	1	
-52	24894-14		CABLE ASSEMBLY - Propeller control	1	
-53	24894-15		CABLE ASSEMBLY - Cowl flap, left	1	
-54	24894-16		CABLE ASSEMBLY - Cowl flap, right	1	
-55	455 177		CONTROL ASSEMBLY - (#F21020-65)	1	
-56	26439-00	B	PLATE - Engine controls support	1	
	24081-00	C	CLIP - Double cable retainer	1	
	24081-02	C	CLIP - Single cable retainer	1	
-57	26447-00	B	BRACKET ASSEMBLY - Engine controls support	1	
	27148-00	C	BRACKET ASSEMBLY - Engine controls support	1	
-58	26912-00		BRACKET ASSEMBLY - Quadrant cover attachment	1	
-59	26902-00		BRACKET ASSEMBLY - Cowl flap control	1	
-60	26561-00		BRACKET - Quadrant cover attachment	1	
-61	24123-00		CLIP - Pin retainer	3	
-62	24081-00		CLIP - Control retainer	1	
-63	24153-00		PIN - Quadrant hinge	1	
-64	25069-04		NUT ASSEMBLY - Jam	1	
-65	31747-00		JOINT ASSEMBLY - Ball, spring type	5	
-66	16604-00		BRACKET ASSEMBLY - Propeller pitch control	1	
-67	488 327		TERMINAL - (AN665-21R)	5	
-68	404 224		NUT - (AN315-3R)	5	
-69	81342-11		WASHER - Spacer	3	
	407 586		WASHER - (AN960-516L)	1	
	400 154		BOLT - (AN5-7)	1	
	424 051		COTTER PIN - (MS24665-132)	1	
-70	27139-00	A	BRACKET - Quadrant lever stop	1	
-71	27140-02	A	COVER - Quadrant, black	1	
	27140-03	A	COVER - Quadrant, white	1	
	27140-04	A	COVER - Quadrant, beige	1	
-72	27141-00	A	PLACARD - Mixture, throttle, propeller and turbocharger	1	

A - Used if RaJay Turbocharger is installed.
B - Used on airplanes with serial numbers 24-4783, 24-4805 to 24-4903 inclusive, 24-4905 to 24-4913 inclusive, 24-4915 to 24-4934 inclusive.
C - Used on airplanes with serial numbers 24-4804, 24-4904, 24-4914 and 24-4935 and up.

When ordering, always specify Part Number, Description and Serial Number of Aircraft

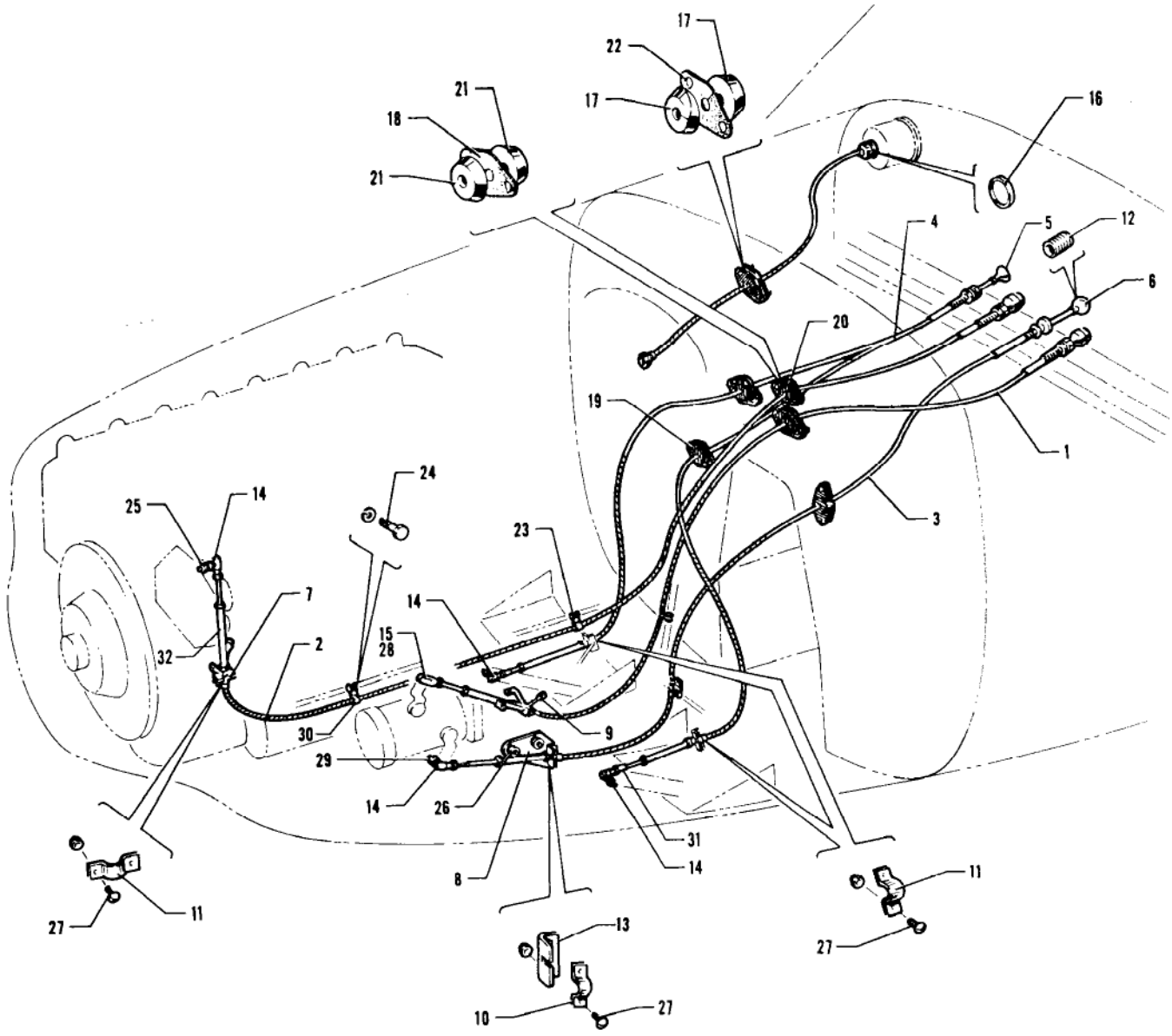

Figure 29B. Engine Controls Installation "400"

Figure and Index Number	Part Number	Code	NOMENCLATURE	No. Req.	SERIAL NUMBERS AFFECTED
29B-	24556		DRAWING - Engine Controls Installation		
-1	22633-04		CONTROL ASSEMBLY - Mixture	1	
-2	22633-05		CONTROL ASSEMBLY - Prop governor	1	
-3	455 185		CONTROL ASSEMBLY - Throttle (#3D638-1183-2)	1	
-4	455 268		CONTROL ASSEMBLY - Cowl flaps (#D914-1229-1)	1	
-5	571 059		KNOB - Cowl flap control (#658-4)	1	
-6	471 049		KNOB - Throttle control (#95)	1	
-7	24430-00		BRACKET ASSEMBLY - Prop governor control	1	
-8	24431-00		BRACKET - Throttle control	1	
-9	24432-00		BRACKET ASSEMBLY - Mixture control support	1	
-10	18219-00		CLAMP - Control cable attachment	1	
-11	18219-02		CLAMP - Control cable attachment	4	
-12	17789-00		BUSHING - Knob insert, throttle control	1	
-13	18132-00		LUG - Control cable support bracket	1	
-14	19987-00		JOINT ASSEMBLY - Ball	4	
-15	554 757		CLEVIS - (MS35812-1) Mixture control	1	
-16	85012-14		WASHER - Tachometer	2	
-17	22104-03		GROMMET - Firewall seal	10	
-18	22105-03		GASKET - Firewall seal	5	
-19	481 062		HOLDER - Grommet (#MT340)	10	
-20	22103-02		PLATE - Firewall seal	2	
-21	22104-07		GROMMET - Firewall seal	2	
-22	22105-05		GASKET - Firewall seal	1	
-23	80032-51		CLAMP - Prop governor cable	3	
-24	418 420		SCREW - Cap (1/4 x 20NC-3 x 1/2)	3	
	407 105		WASHER - (AN935-416)	3	
-25	404 224		NUT - (AN315-3R)	5	
-26	405 580		NUT - (1/4 - 20)	3	
	407 105		WASHER - (AN935-416)	3	
-27	415 754		SCREW - (AN515-8R8)	8	
	404 833		NUT - (MS20364-832C)	8	
-28	400 054		BOLT - (AN3-7)	1	
	407 564		WASHER - (AN960-10)	1	
	404 100		NUT - (AN310-3)	1	
	424 051		PIN - Cotter (AN380-2-2)	1	
-29	404 835		NUT - (MS20364-1032C)	4	
-30	25020-00		CLAMP - Prop governor cable	2	26-2 to 26-124 inclusive
	25020-02		CLAMP - Prop governor cable	3	26-125 and up
-31	25069-00		TUBE AND NUT ASSEMBLY - Cowl flap cable	2	26-125 and up
-32	25079 00	A	TUBE ASSEMBLY - Mixture control cable guide	1	26-125 and up

A - Used on serial numbers 26-2 to 26-124 inclusive if Service Letter No. 459 has been complied with.

When ordering, always specify Part Number, Description and Serial Number of Aircraft

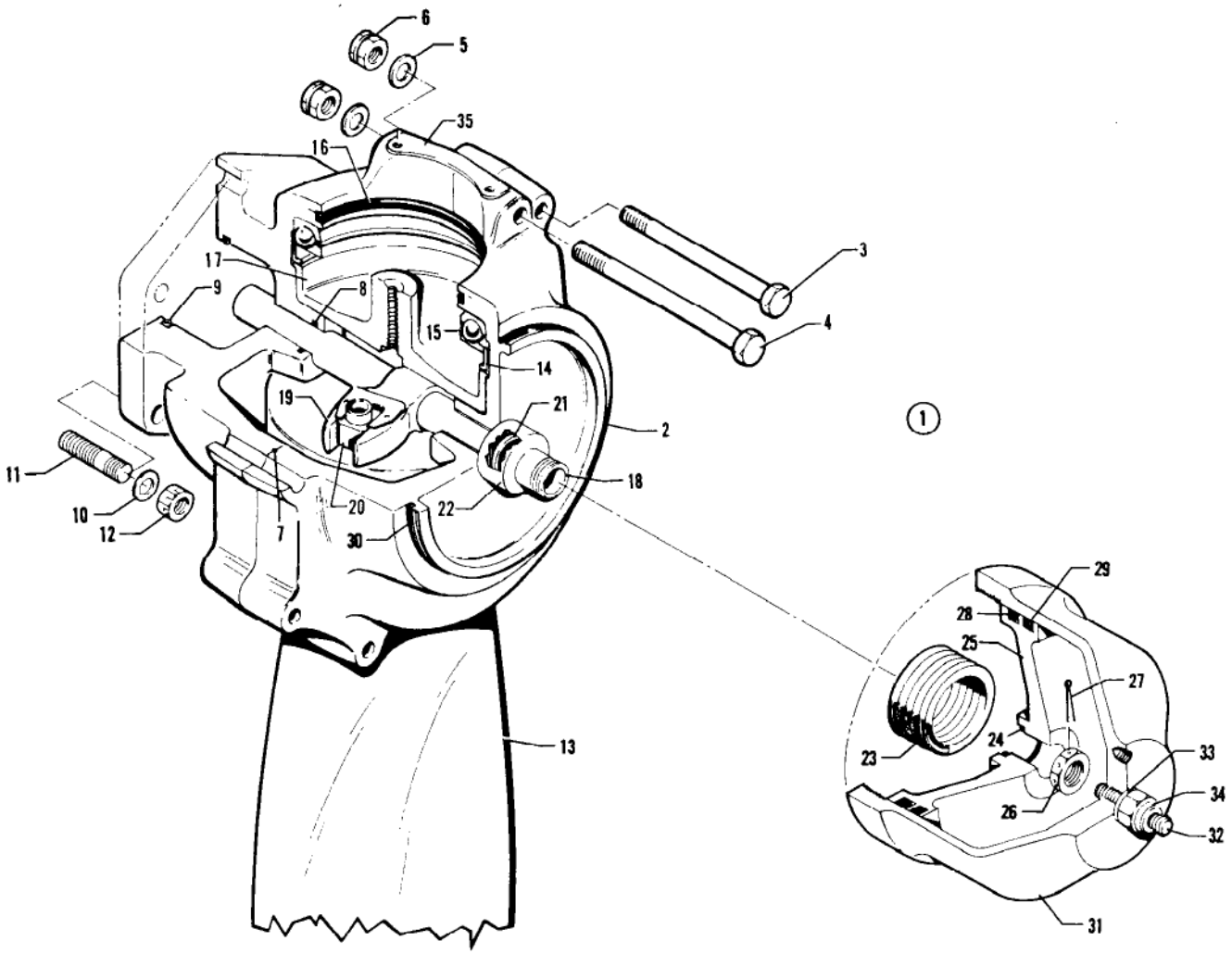

Figure 29C. Propeller Assembly

Figure and Index Number	Part Number	Code	NOMENCLATURE	No. Req.	SERIAL NUMBERS AFFECTED
29C-1	450 934		PROPELLER ASSEMBLY - (HC-C2YK-1A/8467-7R)	1	24-3642, 24-4000 to 24-4371 incl.
	450 913		PROPELLER ASSEMBLY - (HC-C2YK-1B/8467-7R)	1	24-4372 to 24-4782 inclusive, 24-4784 to 24-4803 inclusive
	550 907		PROPELLER ASSEMBLY - (HC-E2YR-1B/8467-7R)	1	24-4783, 24-4804 to 24-5007 incl.
	550 926		PROPELLER ASSEMBLY - (HC-E2YR-1BF/F8467-7R)	1	24-5008 and up
	550 919	EH	PROPELLER ASSEMBLY - (HC-E2YR-1B/8467-7R)	1	
	550 927	E	PROPELLER ASSEMBLY - (HC-E2YR-1BF/F8467-7R)	1	24-5008 and up
-2	752 020	AB	HUB ASSEMBLY - Propeller (D-2201-3)	1	
	752 015	C	HUB ASSEMBLY - Propeller (D-2477-3)	1	
	755 222	F	HUB ASSEMBLY - Propeller (D-2201-3F)	1	
	755 223	G	HUB ASSEMBLY - Propeller (D-2477-3F)	1	
-3	753 461		BOLT - Hex head (A-2431)	6	
-4	758 111		BOLT - Hex head (A-2432)	4	
-5	407 567	D	WASHER - (AN960-616)	10	
-6	752 511	D	NUT - Elastic (A-2043)	10	
-7	756 241	D	SEAL - Hub (A-2436)	2	
-8	755 932	D	"O" RING - Rod (PRP-902-13)	1	
-9	755 800	D	"O" RING - Hub (PRP-909-6)	1	
-10	407 569	AB	WASHER - (AN960-816)	6	
	756 626	C	WASHER - (A-1381)	6	
-11	756 295	AB	STUD - Flange (A-2247-2)	6	
	757 583	C	STUD - Flange (A-2067)	6	
-12	752 530		NUT - Castle (A-2069)	6	
-13	758 112	ABC	BLADE - Propeller (8467-7R)	2	
	758 197	FG	BLADE - Propeller (F8467-7R)	2	
-14	755 968		RING - Bearing guide (A-2204)	2	
-15	753 463		BEARING - Blade, split (A-2202)	2	
-16	755 934	D	"O" RING - Blade (PRP-902-42)	2	
-17	757 249		PRELOAD PLATE UNIT - (B-2256)	2	
-18	755 992	A	ROD - Piston (A-2418-1)	1	
	755 993	B	ROD - Piston (A-2418-2)	1	
	756 027	C	ROD - Piston (A-2418-3)	1	
-19	754 815	A	FORK UNIT - Pitch change (B-2410-2-1)	1	
	751 820	BC	FORK UNIT - Pitch change (B-2457-2)	1	
	754 826	FG	FORK UNIT - Pitch change (B-2457-3)	1	
-20	753 464	ABC	BLOCK - Pitch change (A-2217-1)	1	
	758 204	FG	BLOCK - Pitch change (A-2217-3)	1	
-21	755 972		SPLIT RETAINER - (A-2430)	1	
-22	757 554		SPACER - High stop (A-2420)	1	

A - Used with Hartzell Propeller Assembly HC-C2YK-1A.
B - Used with Hartzell Propeller Assembly HC-C2YK-1B.
C - Used with Hartzell Propeller Assembly HC-E2YR-1B.
D - Parts included in Propeller Repair Kit, Part No. 756 892.
E - Used if RaJay Turbocharger is installed.
F - Used with Hartzell Propeller Assembly HC-C2YK-1BF.
G - Used with Hartzell Propeller Assembly HC-E2YR-1BF.
H - Used on airplanes with serial numbers 24-4804, 24-4904, 24-4914 and 24-4935 to 24-5007 inclusive.

Figure and Index Number	Part Number	Code	NOMENCLATURE	No. Req.	SERIAL NUMBERS AFFECTED
29C-23	757 555	A	SPRING - (A-2213)	1	
	757 556	BC	SPRING - (A-2213-1)	1	
-24	755 995	D	"O" RING - Piston seal (PRP-914-6)	1	
-25	757 302		PISTON - (B-2419)	1	
-26	752 513		NUT - Rod (A-2211)	1	
-27	424 061	D	COTTER PIN - (AN380-3-5)	1	
-28	755 994	D	"O" RING - Piston (PRP-902-51)	1	
-29	757 557	D	SEAL - Felt (B-1843)	1	
-30	755 935	D	"O" RING - Cylinder (PRP-909-25)	1	
-31	757 827	A	CYLINDER - (B-2428)	1	
	757 828	BC	CYLINDER - (B-2428-1)	1	
-32	757 558		SCREW - Low stop (A-2421)	1	
-33	757 559	C	SEAL - Parker (7100-3/8)	1	
-34	752 534		NUT - (52NTE-064)	1	
-35	756 607		WEIGHTS - Balance (A-2424)	AR	

A - Used with Hartzell Propeller Assembly HC-C2YK-1A.
B - Used with Hartzell Propeller Assembly HC-C2YK-1B.
C - Used with Hartzell Propeller Assembly HC-E2YR-1B.
D - Parts included in Propeller Repair Kit, Part No. 756 892.

When ordering, always specify Part Number, Description and Serial Number of Aircraft

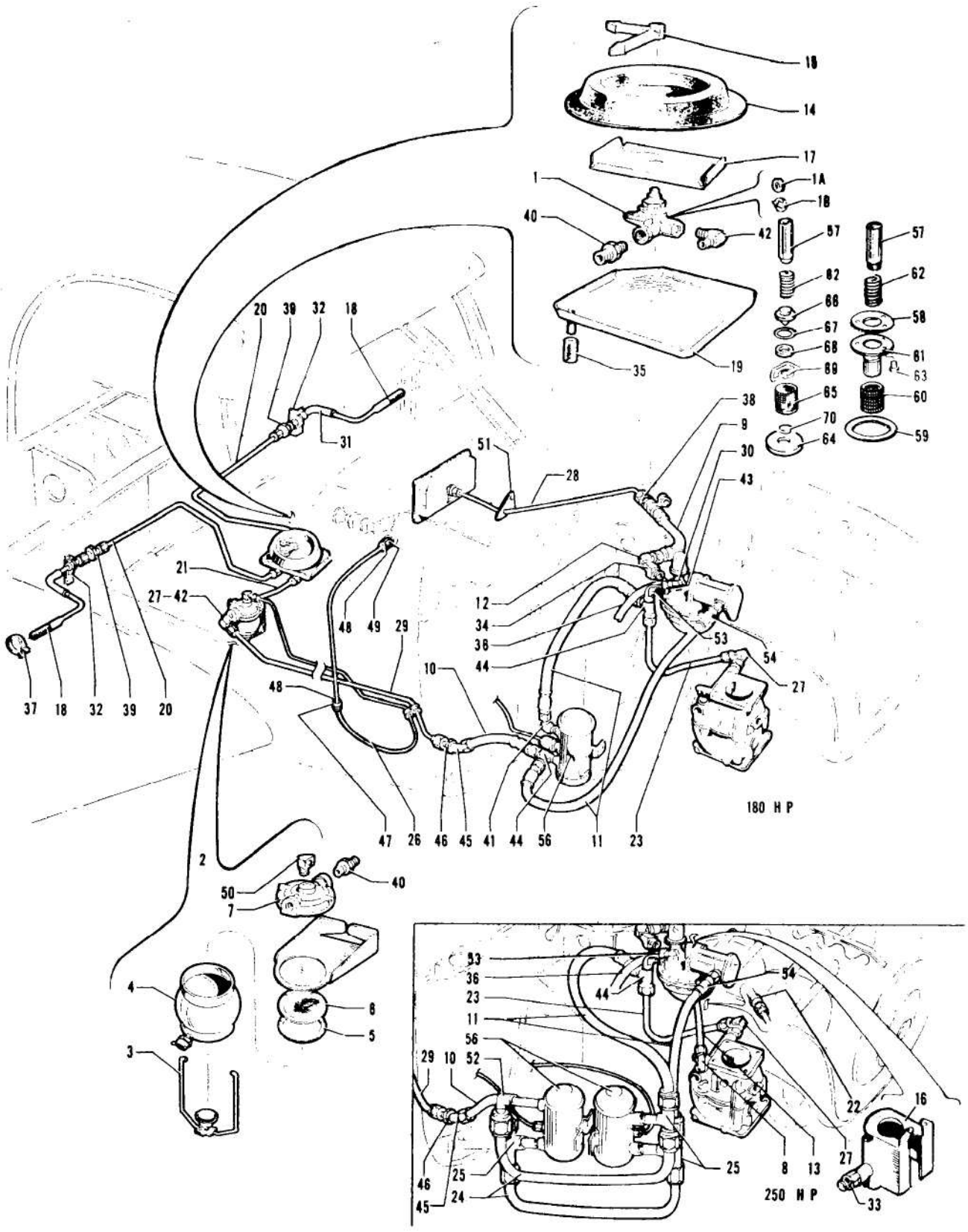

Figure 30. Fuel System Installation "180" & "250"
(Serial Nos. 24-1 to 24-2174 inclusive, 24-2176 to 24-2298 inclusive)

Figure and Index Number	Part Number	Code	NOMENCLATURE	No. Req.	SERIAL NUMBERS AFFECTED
30-	20991		DRAWING - Fuel System Installation "180"		
	21669		DRAWING - Fuel System Installation "250"		
-1	11383-04		VALVE ASSEMBLY - Fuel	1	
-1a	752 822		PACKING - "O" Ring	1	
-1b	756 645		WASHER - Fuel valve	1	
-2	14330-04		STRAINER ASSEMBLY - Fuel	1	
-3	494 644		WIRE ASSEMBLY - Bail	1	
-4	16211-00		BOWL ASSEMBLY - (E. Z. Drain)	1	
-5	85012-32		GASKET - Fuel strainer	1	
-6	750 272		SCREEN - Fuel strainer	1	
-7	14428-00		COVER - Fuel strainer	1	
-8	458 893		ELBOW - (AN822-3D) "250"	1	
-9	17766-07		HOSE ASSEMBLY - Flexible (fuel pressure)	1	24-1 to 24-2201 inclusive
	17766-21		HOSE ASSEMBLY - Flexible (fuel pressure) "250"	1	24-2202 and up
	17766-37		HOSE ASSEMBLY - Flexible (fuel pressure) "180"	1	24-2202 and up
-10	17766-17		HOSE ASSEMBLY - Flexible (fuel line) "180"	1	
	17766-20		HOSE ASSEMBLY - Flexible (fuel line) "250"	1	
-11	17766-18		HOSE ASSEMBLY - Flexible (fuel line) "180"	2	
	17766-20		HOSE ASSEMBLY - Flexible (fuel line) "250"	2	
-12	17803-00		FITTING - Restricted	1	
-13	17766-21		HOSE ASSEMBLY - Flexible "250"	1	
-14	20651-00		PLATE - Fuel valve protector	1	
-15	20655-00		HANDLE - Fuel valve	1	
-16	21529-00		BAFFLE ASSEMBLY - Fuel pump "250"	1	
	23107-00	A	BAFFLE ASSEMBLY - Fuel pump "250"	1	
-17	20909-00		BRACKET - Fuel selector valve mounting	1	
-18	20910-00		STRAINER ASSEMBLY - Fuel tank finger	2	
-19	20993-00		PAN - Fuel valve drip	1	
-20	21003-00		LINE ASSEMBLY - Fuel	2	
-21	21004-00		LINE ASSEMBLY - Fuel	1	
-22	491 049		UNION - (AN815-3D) "250"	1	
-23	20982-00		LINE ASSEMBLY - Fuel "180"	1	
	23318-00	A	LINE ASSEMBLY - Fuel "180"	1	
	21607-00		LINE ASSEMBLY - Fuel "250"	1	
	23317-00	A	LINE ASSEMBLY - Fuel "250"	1	
-24	21657-00		LINE ASSEMBLY - Fuel "250"	2	
-25	22404-00		TEE - (488 333)	3	
-26	21150-00		LINE ASSEMBLY - Fuel primer	1	
-27	458 895		ELBOW - (AN822-6D) "250"	3	
	458 897		ELBOW - (AN822-5-4D) "180"	1	
-28	21163-00		LINE ASSEMBLY - Fuel pressure	1	24-1 to 24-2201 inclusive
	21163-03		LINE ASSEMBLY - Fuel	1	24-2202 and up
-29	21205-00		LINE ASSEMBLY - Fuel "180"	1	
	21205-03		LINE ASSEMBLY - Fuel "250"	1	
-30	21227-00		ELBOW - Fuel line	1	
-31	82371-04		HOSE - Flexible, 3-3/4"	2	
	16633-08		HOSE - Flexible, 5"	2	
-32	21269-00		CLIP - Fuel line attachment	2	
-33	10525-74		TUBE - Flexible, fuel pump air blast "250"	1	
	22502-21	A	TUBE - Flexible, fuel pump air blast "250"	1	
-34	488 381		TEE - (W/H 3750 x 2)	1	

A - Used if fuel pump #5623467 is installed.

When ordering, always specify Part Number, Description and Serial Number of Aircraft

Figure and Index Number	Part Number	Code	NOMENCLATURE	No. Req.	SERIAL NUMBERS AFFECTED
30-35	82371-78		HOSE - Flexible, drip drain	1	
-36	82371-80		HOSE - Flexible, pump vent	1	
-37	454 921		CLAMP - (M-10)	2	
-38	491 049		UNION - (AN815-3D)	1	
-39	491 051		UNION - (AN815-5D)	2	
-40	476 671		NIPPLE - (AN816-5-4D)	3	
-41	458 896		ELBOW - (AN822-5D)	1	
-42	458 897		ELBOW - (AN822-5-4D)	3	
-43	454 972		CLAMP - (M-6)	1	
-44	488 317		TEE - (AN826-5D) "180"	1	
	488 314		TEE - (AN826-6D) "250"	1	
-45	458 911		ELBOW - (AN937-5D) "180"	1	
	458 901		ELBOW - (AN833-6D) "250"	1	
-46	477 623		NUT - (AN924-5D) "180"	1	
	477 620		NUT - (AN924-6D) "250"	1	
-47	434 125		GROMMET - (AN931-2-9)	1	
-48	460 683		SLEEVE - (W/11 #W60 x 2)	2	
-49	460 684		NUT - (W/H #W61 x 2)	2	
-50	458 912		ELBOW - (W/H #400 x 2)	1	
-51	22136-00		PLACARD - Firewall	1	24-2202 and up
-52	22403-00		ELBOW - (458 955)	1	
-53	458 919	A	ELBOW - (AN914-2D)	1	
-54	458 897	A	ELBOW - (AN822-5-4D) "180"	1	
	476 662	A	NIPPLE - (AN816-6D) "250"	1	
-55	453 616	A	BUSHING - (AN912-1D) "180"	1	
-56	481 666		PUMP ASSEMBLY - Fuel (electric) "180"	1	
	481 666		PUMP ASSEMBLY - Fuel (electric) "250"	2	
-57	755 803		PLUNGER ASSEMBLY - (476 474)	1	
-58	751 857		GASKET - Plunger (475 126)	1	
-59	751 858		GASKET - Cover (475 594)	1	
-60	756 107		SCREEN - Filter (475 634)	1	
-61	751 556		SPRING CUP ASSEMBLY - (476 364)	1	
-62	756 108		SPRING - (475 127)	1	
-63	756 109		SCREW - (490 028)	3	
-64	751 872		GASKET - Cover (479 136)	1	
-65	751 799		SCREEN - Filter (479 135)	1	
-66	753 119		CUP VALVE - (479 132)	1	
-67	756 162		SEAL - "O" Ring (479 139)	1	
-68	753 193		WASHER - (479 138)	1	
-69	752 869		RETAINER - (479 137)	1	
-70	753 650		MAGNET - (479 012)	1	

A - Used if fuel pump #5623467 is installed.

When ordering, always specify Part Number, Description and Serial Number of Aircraft

PILOTEN-SERVICE
Straubing LBA II-A-170
Telefon (09429) 716

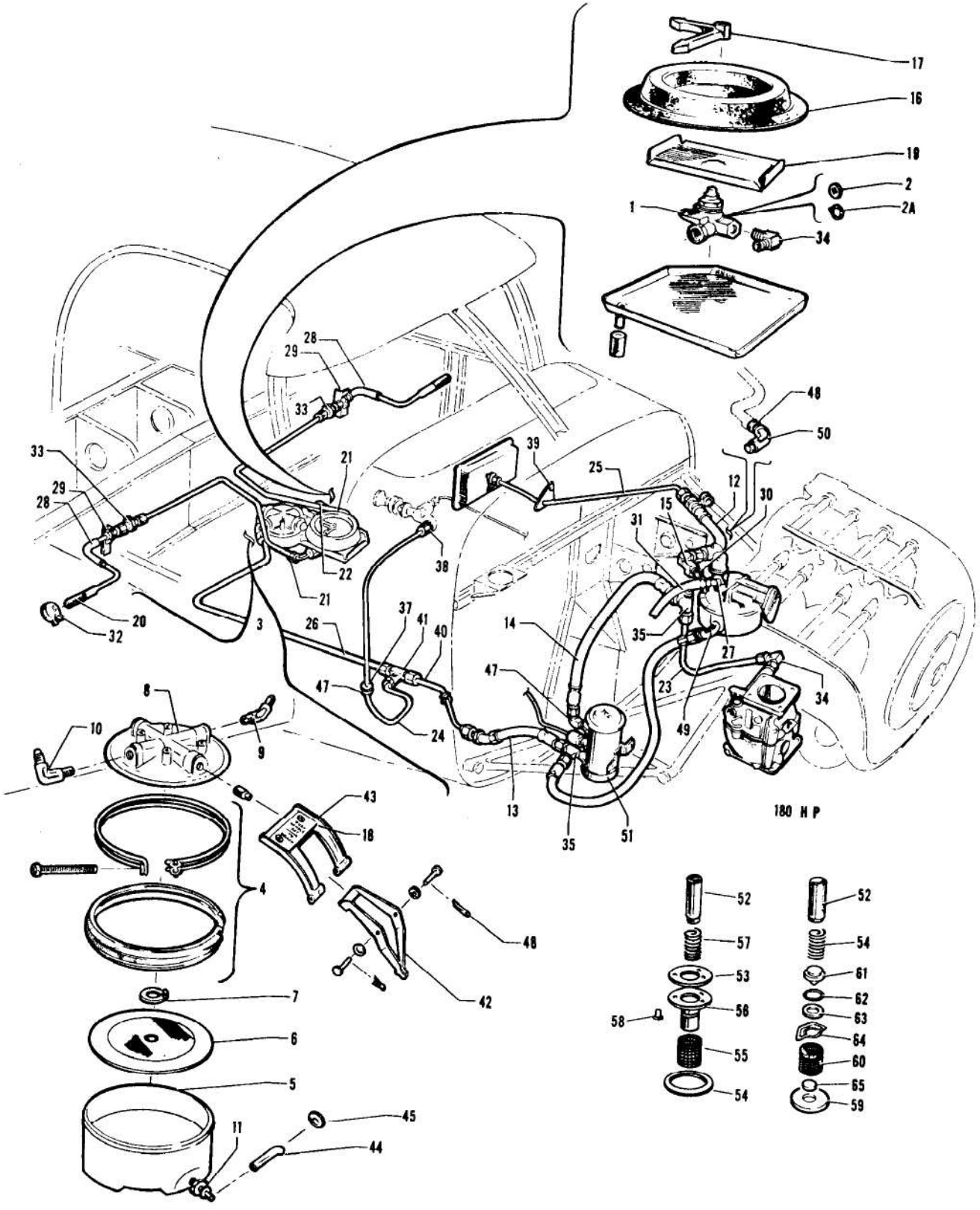

Figure 30A. Fuel System Installation "180"
(Serial Nos. 24-2175, 24-2299 and up)

Figure and Index Number	Part Number	Code	NOMENCLATURE	No. Req.	SERIAL NUMBERS AFFECTED
30A-	22373		DRAWING - Fuel System Installation		
-1	11383-04		VALVE ASSEMBLY - Fuel	1	
-2	752 822		PACKING - "O" Ring	1	
-2a	756 645		WASHER - Fuel valve	1	
-3	22312-00		STRAINER ASSEMBLY - Fuel	1	
-4	22306-00		CLAMP ASSEMBLY	1	
-5	22034-00		BOWL ASSEMBLY	1	
-6	22458-00		SCREEN	1	
-7	484 728		SNAP RING - (#5100-50)	1	
-8	22035-02		COVER	1	
-9	458 892		ELBOW - (AN823-6D) (from fuel valve)	1	
-10	458 897		ELBOW - (AN822-5-4D) (to engine)	1	
-11	22179-00		DRAIN VALVE ASSEMBLY	1	
-12	17766-40		HOSE ASSEMBLY - Flexible (fuel pressure)	1	
-13	17766-35		HOSE ASSEMBLY - Flexible (fuel line)	1	
-14	17766-18		HOSE ASSEMBLY - Flexible (fuel line)	2	
-15	22114-00		FITTING - Restricted	1	
-16	20651-00		PLATE - Fuel valve protector, black	1	24-2175, 24-2299 to 24-2843
	20651-02		PLATE - Fuel valve protector, dark brown	1	24-2844 and up
	20651-03		PLATE - Fuel valve protector, light charcoal	1	24-2844 and up
	20651-04		PLATE - Fuel valve protector, dark green	1	24-3285 and up
-17	20655-00		HANDLE - Fuel valve	1	
-18	22807-00		STOP PLATE - Fuel strainer	1	24-2698 and up
-19	22216-00		BRACKET - Fuel selector valve mounting	1	
-20	20910-00		STRAINER ASSEMBLY - Fuel tank finger	2	
-21	22279-00		LINE ASSEMBLY - Fuel	2	
-22	22282-03		LINE ASSEMBLY - Fuel	1	
-23	20982-00	A	LINE ASSEMBLY - Fuel	1	24-2175, 24-2299 to 24-3078
	23318-00		LINE ASSEMBLY - Fuel	1	24-3079 and up
-24	21150-03		LINE ASSEMBLY - Fuel primer	1	
-25	21163-05		LINE ASSEMBLY - Fuel pressure	1	
-26	22275-00		LINE ASSEMBLY - Fuel	1	
-27	458 948		ELBOW - Fuel line (#134A6)	1	24-2175, 24-2299 to 24-3664
	558 911		ELBOW - Fuel line (#1K11-1)	1	24-3665 and up
-28	16633-08		HOSE ASSEMBLY - Flexible	2	
-29	21269-00		CLIP - Fuel line attachment	2	
-30	488 381		TEE - (W/H 3750 x 2)	1	
-31	82371-80		HOSE - Flexible pump vent	1	
-32	454 921		CLAMP - (M-10)	2	
-33	491 051		UNION - (AN815-5D)	2	
-34	458 897		ELBOW - (AN822-5-4D)	4	
-35	488 317		TEE - (AN826-5D)	2	
-36	434 125		GROMMET - (AN931-2-9)	1	
-37	460 683		SLEEVE - (W/H #W60 x 2)	2	
-38	460 684		NUT - (W/H #W61 x 2)	2	
-39	22280-00		PLACARD - Firewall	1	
-40	22277-00		LINE ASSEMBLY - Fuel	1	
-41	22256-00		TEE	1	
-42	22243-00		ARM - Fuel strainer	1	

A - If fuel pump #5623467 is installed, order part for serial numbers 24-3079 and up.

When ordering, always specify Part Number, Description and Serial Number of Aircraft

Figure and Index Number	Part Number	Code	NOMENCLATURE	No. Req.	SERIAL NUMBERS AFFECTED
30A-43	22265-00		BRACKET - Fuel strainer	1	
-44	22369-05		SLEEVE	1	
-45	16268-06		GROMMET	1	
-46	424 052		PIN - Cotter (AN380-2-3)	2	
-47	458 896		ELBOW - (AN822-5D)	1	
-48	453 616	A	BUSHING - (AN912-1D) (at engine fuel pump outlet	1	24-3079 and up
-49	458 897	A	ELBOW - (AN822-5-4D) (at engine fuel pump inlet)	1	24-3079 and up
-50	458 919	A	ELBOW - (AN914-2D) (at engine fuel pump outlet)	1	24-3079 and up
-51	481 666		PUMP ASSEMBLY - Fuel (electric)	1	
-52	755 803		PLUNGER ASSEMBLY - (476 474)	1	
-53	751 857		GASKET - Plunger (475 126)	1	
-54	751 858		GASKET - Cover (475 594)	1	
-55	756 107		SCREEN - Filter (475 634)	1	
-56	751 556		SPRING CUP ASSEMBLY - (476 364)	1	
-57	756 108		SPRING - (475 127)	1	
-58	756 109		SCREW - (490 028)	3	
-59	751 872		GASKET - Cover (479 136)	1	
-60	751 799		SCREEN - Filter (479 135)	1	
-61	753 119		CUP VALVE - (479 132)	1	
-62	756 162		SEAL - "O" Ring (479 139)	1	
-63	753 193		WASHER - (479 138)	1	
-64	752 869		RETAINER - (479 137)	1	
-65	753 650		MAGNET - (479 012)	1	

A - Used on airplanes with serial numbers 24-2175, 24-2299 to 24-3078 inclusive if fuel pump #5623467 has been installed.

When ordering, always specify Part Number, Description and Serial Number of Aircraft

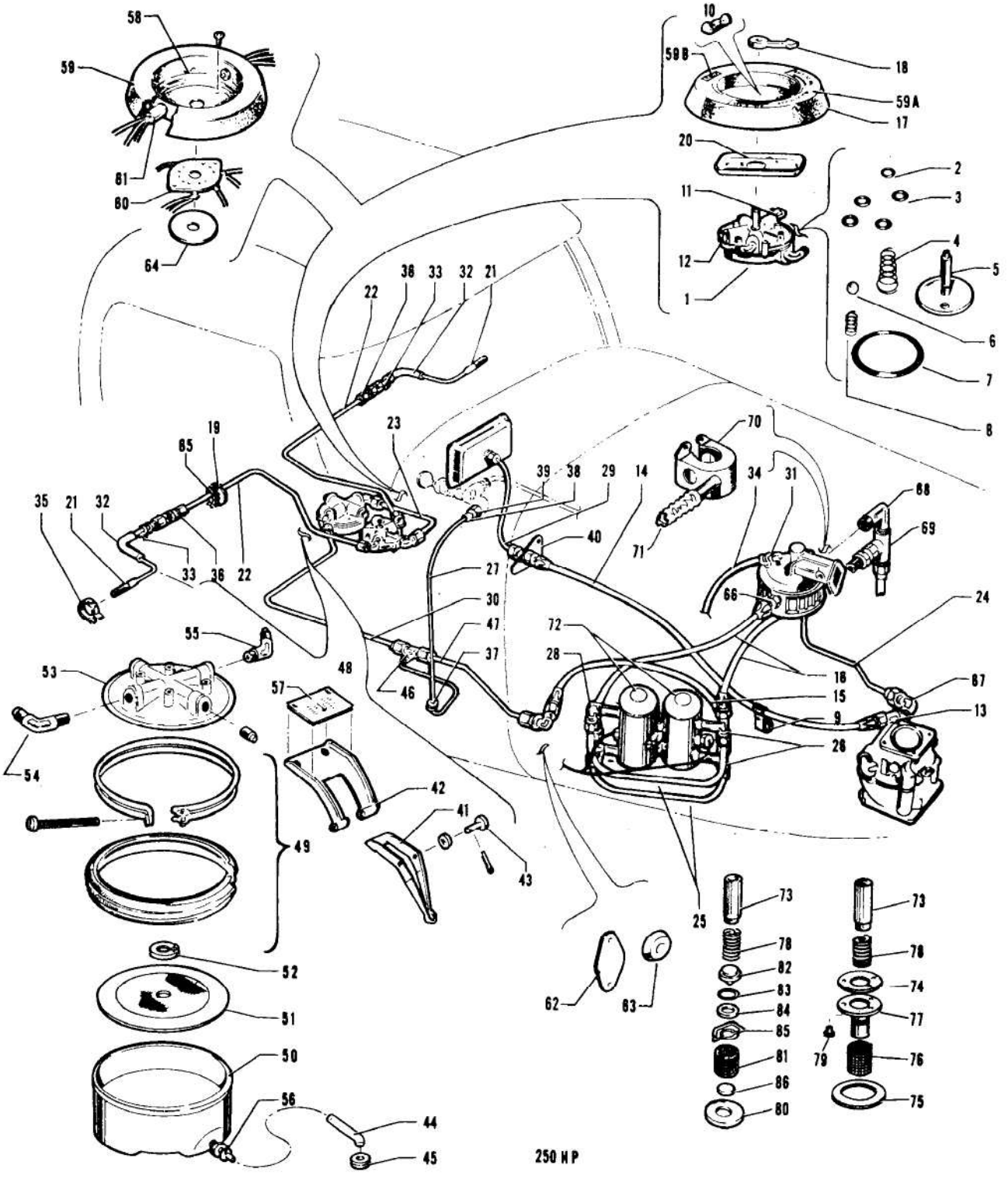

Figure 30B. Fuel System Installation "250"
(Serial Nos. 24-2299 and up)

Figure and Index Number	Part Number	Code	NOMENCLATURE	No. Req.	SERIAL NUMBERS AFFECTED
30B-	22395		DRAWING - Fuel System Installation		24-2299 to 24-2843 inclusive
	23190		DRAWING - Fuel System Installation		24-2844 and up
-1	492 069		VALVE - Fuel (A73W)	1	24-2299 to 24-2843 inclusive
	492 068		VALVE - Fuel (A73V)	1	24-2844 and up
-2	752 742		PACKING - "O" Ring (MS29513-10)	1	
-3	755 909	A	PACKING - "O" Ring (MS29513-15)	4	
	755 826	BC	PACKING - "O" Ring (A106-520)	4	
-4	756 123		SPRING - (A110-130)	1	
-5	753 109	A	VALVE - Rotary (A104-305)	1	
	753 114	B	VALVE - Rotary (A104-305)	1	
	753 115	C	VALVE - Rotary (A104-380)	1	
-6	751 449		BALL - (A134-10)	1	
-7	752 850		PACKING - "O" Ring (MS29513-148)	1	
-8	756 122		SPRING - (A110-129)	1	
-9	80032-10		CLAMP	1	
-10	22266-00		STOP	1	
-11	458 897		ELBOW - (AN822-5-4D) 90°	3	24-2299 to 24-2843 inclusive
	458 897		ELBOW - (AN822-5-4D) 90°	1	24-2844 and up
	458 890		ELBOW - (AN823-5D) 45°	2	24-2844 and up
-12	480 937		PLUG - (W/H 3152 x 4)	2	
-13	22114-00		ELBOW	1	
-14	17766-43		HOSE ASSEMBLY - Flexible (fuel pressure)	1	
-15	17766-20		HOSE ASSEMBLY - Flexible (fuel line)	1	24-2299 to 24-3267 inclusive
	17766-19		HOSE ASSEMBLY - Flexible (fuel line)	1	24-3268 and up
-16	17766-20		HOSE ASSEMBLY - Flexible (fuel line)	2	
-17	22227-00		PLATE - Fuel valve protector	1	24-2299 to 24-2843 inclusive
-18	22175-00		HANDLE - Fuel valve	1	
-19	23230-00		SEAL - Fuel line	2	24-2844 and up
-20	22216-00		BRACKET - Fuel selector valve mounting	1	
-21	20910-00		STRAINER ASSEMBLY - Fuel tank finger	2	24-2299 to 24-2843 inclusive
	23019-03		STRAINER ASSEMBLY - Fuel tank finger	2	24-2844 and up
-22	22297-00		LINE ASSEMBLY - Fuel	2	24-2299 to 24-2843 inclusive
	23023-03		LINE ASSEMBLY - Fuel	2	24-2844 and up
-23	22282-03		LINE ASSEMBLY - Fuel	1	
-24	21607-00	D	LINE ASSEMBLY - Fuel	1	24-2299 to 24-3080 inclusive
	23317-00		LINE ASSEMBLY - Fuel	1	24-3081 and up
-25	21657-00		LINE ASSEMBLY - Fuel	2	
-26	22404-00		TEE - (488 333)		
-27	21150-03		LINE ASSEMBLY - Fuel primer	1	
-28	22403-00		ELBOW - (458 955)	1	
-29	21163-05		LINE ASSEMBLY - Fuel pressure	1	
-30	22275-00		LINE ASSEMBLY - Fuel	1	
-31	21227-00		ELBOW - Fuel line	1	24-2299 to 24-2843 inclusive
	458 948		ELBOW - Fuel line	1	24-2844 to 24-3667 inclusive
	558 911		ELBOW - Fuel line (#1K11-1)	1	24-3668 and up

A - Used when A73 valve is installed.
B - Used when A73W valve is installed.
C - Used when A73V valve is installed.
D - If fuel pump #5623467 is installed, order part for serial numbers 24-3081 and up.

When ordering, always specify Part Number, Description and Serial Number of Aircraft

Figure and Index Number	Part Number	Code	NOMENCLATURE	No. Req.	SERIAL NUMBERS AFFECTED
30B-32	16633-08		HOSE - Flexible	2	
-33	21269-00		CLIP - Fuel line attachment	2	
-34	82371-84		HOSE - Flexible, pump vent	1	
-35	454 921		CLAMP - (M-10)	2	
-36	491 051		UNION - (AN815-5D)	2	
-37	434 125		GROMMET - (AN931-2-9)	1	
-38	460 683		SLEEVE - (W/H #W60 x 2)	2	
-39	460 684		NUT - (W/H #W61 x 2)	2	
-40	22280-00		PLACARD - Firewall	1	
-41	22243-00		BRACKET	1	
-42	22265-00		ARM	1	
-43	424 210		PIN - (AN394-27)	1	
-44	22369-05		SLEEVE	1	
-45	16268-06		GROMMET	1	
-46	22256-00		TEE	1	
-47	22277-00		LINE ASSEMBLY - Fuel	1	
-48	22312-00		STRAINER ASSEMBLY - Fuel	1	
-49	22306-06		CLAMP ASSEMBLY	1	
-50	22034-00		BOWL ASSEMBLY	1	
-51	22458-00		SCREEN - Fuel strainer	1	
-52	484 728		SNAP RING - (#5100-50)	1	
-53	22035-02		COVER - Fuel strainer	1	
-54	458 892		ELBOW - 45° (AN823-6D) (to engine)	1	
-55	458 897		ELBOW - 90° (AN822-5-4D) (from fuel valve)	1	
-56	22179-00		DRAIN VALVE ASSEMBLY	1	
-57	22807-00		STOP PLATE - Fuel strainer	1	24-2698 and up
-58	22838-00		PLATE ASSEMBLY - Fuel selector protector, gray (complete)	1	24-2844 and up
	22838-03		PLATE ASSEMBLY - Fuel selector protector, brown (complete)	1	24-2844 and up
	22838-04		PLATE ASSEMBLY - Fuel selector protector, dark green (complete)	1	24-3285 and up
-59	22795-00		PLATE - Fuel selector protector, gray	1	24-2844 and up
	22795-04		PLATE - Fuel selector protector, brown	1	24-2844 and up
	22795-05		PLATE - Fuel selector protector, dark green	1	24-3285 and up
-59a	24971-00		PLACARD - Fuel control	1	
-59b	24981-00		PLACARD - Fuel	1	
-60	22843-00		SWITCH ASSEMBLY - Fuel selector	1	24-2844 and up
-61	487 842		SWITCH - (#923D)	2	24-2844 and up
-62	22105-02		GASKET	2	24-2844 and up
-63	22104-02		GROMMET	4	24-2844 and up
-64	19513-51		WASHER - Bottom	1	24-2844 and up
	19513-50		WASHER - Top	1	24-2844 and up
-65	16268-08		GROMMET	2	24-2844 and up
-66	476 662	A	NIPPLE - (AN816-6D) At engine fuel pump outlet	1	24-3081 and up
-67	458 895		ELBOW - (AN822-6D)	1	
-68	458 919		ELBOW - (AN914-2D)	1	
-69	488 314		TEE - (AN826-6D)	1	

A - Used on airplanes with serial numbers 24-2299 to 24-3080 if fuel pump #5623467 has been installed.

When ordering, always specify Part Number, Description and Serial Number of Aircraft

Figure and Index Number	Part Number	Code	NOMENCLATURE	No. Req.	SERIAL NUMBERS AFFECTED
30B-70	21529-00	A	BAFFLE ASSEMBLY - Fuel pump	1	24-2299 to 24-3080 inclusive
	23107-00	BCD	BAFFLE ASSEMBLY - Fuel pump	1	24-3081 and up
-71	10525-74	A	TUBE - Flexible, fuel pump air blast	1	24-2299 to 24-3080 inclusive
	22502-21	BC	TUBE - Flexible, fuel pump air blast	1	24-3081 and up
-72	481 666		PUMP ASSEMBLY - Fuel (electric)	2	
-73	755 803		PLUNGER ASSEMBLY - (476 474)	1	
-74	751 857		GASKET - Plunger (475 126)	1	
-75	751 858		GASKET - Cover (475 594)	1	
-76	756 107		SCREEN - Filter (475 634)	1	
-77	751 556		SPRING CUP ASSEMBLY - (476 364)	1	
-78	756 108		SPRING - (475 127)	1	
-79	756 109		SCREW - (490 028)	3	
-80	751 872		GASKET - Cover (479 136)	1	
-81	751 799		SCREEN - Filter (479 135)	1	
-82	753 119		CUP VALVE - (479 132)	1	
-83	756 162		SEAL - "O" Ring (479 139)	1	
-84	753 193		WASHER - (479 138)	1	
-85	752 869		RETAINER - (479 137)	1	
-86	753 650		MAGNET - (479 012)	1	

A - If fuel pump #5623467 is installed, order part for serial numbers 24-3081 and up.
B - Used on airplanes with serial numbers 24-2299 to 24-3080 if fuel pump #5623467 has been installed.
C - See Figure 24D if fuel injection is installed.
D - If Engine Fuel Pump AC6440174 is installed, order Baffle Assembly, Part No. 25006-00.

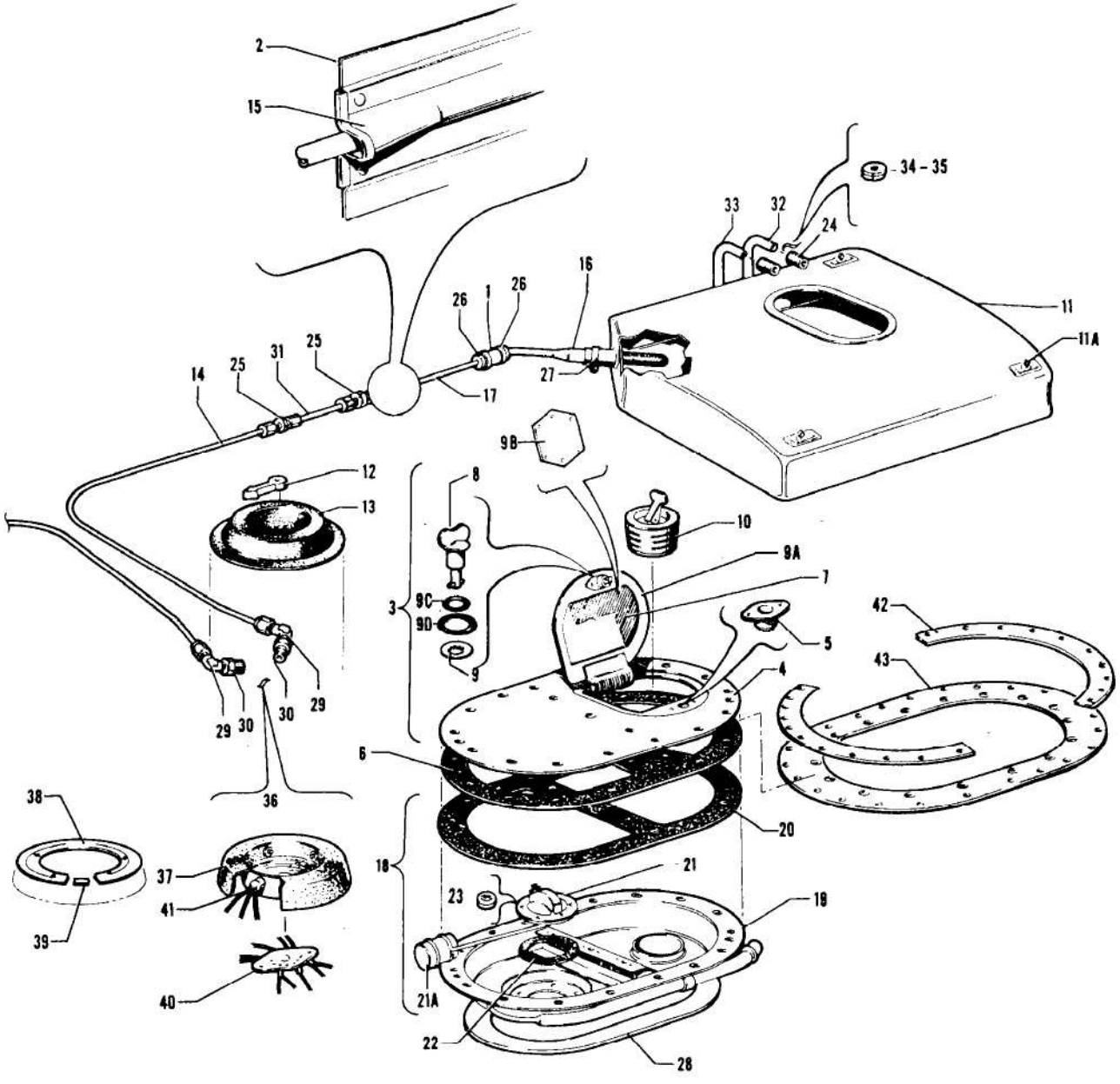

Figure 30C. Auxiliary Fuel System
(Serial Nos. 24-2299 and up)

Figure and Index Number	Part Number	Code	NOMENCLATURE	No. Req.	SERIAL NUMBERS AFFECTED
30C-	22435	Y	DRAWING - System Installation, Auxiliary Fuel		24-2299 to 24-2843 inclusive
	23189	Y	DRAWING - System Installation, Auxiliary Fuel		24-2844 and up
	24928	BV	DRAWING - System Installation, Auxiliary Fuel		
	26943	V	DRAWING - System Installation, Auxiliary Fuel		24-4783, 24-4804 and up
-1	16633-22		HOSE	2	
-2	17528-33	Y	STRIP	4	
-3	20329-06	C	PLATE ASSEMBLY - Fuel cell access hole cover	2	
	26805-04	V	PLATE ASSEMBLY - Fuel cell access hole cover	2	24-4783, 24-4804 and up
-4	20328-02		PLATE - Fuel cell access hole cover	1	
-5	484 342		RECEPTACLE - (#212-12D)	1	
-6	20366-00	C	GASKET - Fuel cell access hole cover plate	1	
-7	21817-06		COVER ASSEMBLY - Fuel cell access hole (with ring type gasket)	1	
	25656-05		COVER ASSEMBLY - Fuel cell access hole (with disc type gasket)	1	
-8	487 590		STUD - (2600-5W) (with ring type cover gasket)	1	
	487 692		STUD - (2600-8W) (with disc type cover gasket)	1	
-9	494 060		LOCK WASHER	1	
-9a	20327-03		GASKET - Fuel access hole cover (ring type)	1	
	25655-00		GASKET - Fuel access hole cover (disc type)	1	
-9b	25654-05	A	PLATE - Gasket retainer	1	
-9c	484 707	A	"O" RING - (AN6227B-3)	1	
-9d	484 708	A	"O" RING - (AN6227B-6)	1	
-10	21821-00		CAP ASSEMBLY - Fuel cell	2	24-2299 to 24-4992 inclusive
	27221-00		CAP ASSEMBLY - Fuel cell	2	24-4993 and up
-11	22037-00		CELL ASSEMBLY - Auxiliary fuel, left	1	
	22037-01		CELL ASSEMBLY - Auxiliary fuel, right	1	
-11a	752 016		HANGER - Fuel cell (D95055)	4	
-12	22175-00		HANDLE - Fuel valve protector	1	24-2299 to 24-2843 inclusive
-14	22254-00		LINE ASSEMBLY - Auxiliary fuel	2	24-2299 to 24-2843 inclusive
	23069-00		LINE ASSEMBLY - Auxiliary fuel	2	24-2844 and up
-15	22260-00		COVER ASSEMBLY - Auxiliary fuel line	2	
-16	22267-00		STRAINER ASSEMBLY - Fuel tank finger	2	
-17	22281-03		LINE ASSEMBLY - Auxiliary fuel	2	
-18	22451-02		PLATE ASSEMBLY - Fuel access hole, left	1	
	22451-03		PLATE ASSEMBLY - Fuel access hole, right	1	
-19	23426-04		PLATE ASSEMBLY - Fuel cell access, left (less gauge)	1	
	23426-05		PLATE ASSEMBLY - Fuel cell access, right (less gauge)	1	
-20	20366-02		GASKET - Fuel cell access plate	1	
-21	20966-02		GAUGE ASSEMBLY - Auxiliary fuel cell	1	
-21a	751 767		FLOAT - Fuel gauge	1	

A - Used with cover assembly 25656-05 only.
B - Used on PA-24-260 with serial numbers 24-3642, 24-4000 to 24-4782, 24-4784 to 24-4803 inclusive.
C - Used on PA-24-250 with serial numbers 24-2299 and up, and PA-24-260 with serial numbers 24-3642, 24-4000 to 24-4782, 24-4784 to 24-4803 inclusive.
V - Used on PA-24-260 airplanes only.
Y - Used on PA-24-250 airplanes only.

When ordering, always specify Part Number, Description and Serial Number of Aircraft

Figure and Index Number	Part Number	Code	NOMENCLATURE	No. Req.	SERIAL NUMBERS AFFECTED
30C-22	13002-00		GASKET - Auxiliary fuel cell gauge	1	
-23	494 063		WASHER - Auxiliary fuel cell gauge	5	
-24	82371-47		HOSE	4	
-25	491 051		UNION - Auxiliary fuel line (AN815-5D)	4	
-26	554 888		CLAMP - (SAE TY F-6)	4	
-27	454 921		CLAMP - (QS100-M10)	2	
-28	462 014		GASKET - Auxiliary fuel cell	2	
-29	458 890		FITTING - Elbow (AN823-5D)	2	24-2299 to 24-2843 inclusive
	458 890		FITTING - Elbow (AN823-5D)	4	24-2844 and up
-30	453 616		FITTING - Bushing (AN912-1D)	2	24-2299 to 24-2843 inclusive
	453 616		FITTING - Bushing (AN912-1D)	4	24-2844 and up
-31	22503-00		FUEL LINE	2	
-32	20244-02		TUBE - Fuel cell vent	1	24-2299 to 24-3529 inclusive
	23464-02		VENT ASSEMBLY - Fuel cell, left	1	24-3530 and up
	23464-03		VENT ASSEMBLY - Fuel cell, right	1	24-3530 and up
-33	21885-04		TUBE - Fuel cell drain	2	
-34	434 140		GROMMET - Fuel cell vent tube (AN931-12-20)	2	24-2299 to 24-3529 inclusive
-35	434 135		GROMMET - Fuel cell drain tube (AN931-8-13)	2	
-36	22828-06	A	PLATE ASSEMBLY - Fuel valve protector, charcoal	1	
	22828-07	Y	PLATE ASSEMBLY - Fuel valve protector, brown	1	24-2844 and up
	22828-08	Y	PLATE ASSEMBLY - Fuel valve protector, green	1	24-2844 and up
	22828-10	V	PLATE ASSEMBLY - Fuel valve protector, black	1	
	22828-13	V	PLATE ASSEMBLY - Fuel valve protector, red	1	24-4783, 24-4804 and up
	22828-14	V	PLATE ASSEMBLY - Fuel valve protector, blue	1	24-4783, 24-4804 and up
	22828-15	V	PLATE ASSEMBLY - Fuel valve protector, beige	1	24-4783, 24-4804 and up
-37	22790-00	A	PLATE - Fuel valve protector, charcoal	1	
	22790-02	Y	PLATE - Fuel valve protector, brown	1	24-2844 and up
	22790-03	Y	PLATE - Fuel valve protector, green	1	24-2844 and up
	22790-05	V	PLATE - Fuel valve protector, black	1	
	22790-08	V	PLATE - Fuel valve protector, red	1	24-4783, 24-4804 and up
	22790-09	V	PLATE - Fuel valve protector, blue	1	24-4783, 24-4804 and up
	22790-10	V	PLATE - Fuel valve protector, beige	1	24-4783, 24-4804 and up
-38	24970-00		PLACARD - Fuel control	1	
-39	24981-00		PLACARD - Fuel	1	
-40	22843-00		SWITCH ASSEMBLY - Fuel selector	1	24-2844 and up
-41	487 842		SWITCH - (#923D)	4	
-42	20332-00	B	SPACER - Reinforcement plate	2	
-43	20330-00	B	PLATE - Access hole reinforcement, left	1	
	26760-00	V	PLATE - Access hole reinforcement, left	1	24-4783, 24-4804 and up
	20330-02	B	PLATE - Access hole reinforcement, right	1	
	26760-01	V	PLATE - Access hole reinforcement, right	1	24-4783, 24-4804 and up

A - Used on PA-24-250 with serial numbers 24-2844 and up, and PA-24-260 with serial numbers 24-3642, 24-4000 to 24-4782, 24-4784 to 24-4803 inclusive.
B - Used on PA-24-250 with serial numbers 24-2299 and up, and PA-24-260 with serial numbers 24-3642, 24-4000 to 24-4782, 24-4784 to 24-4803 inclusive.
V - Used on PA-24-260 airplanes only.
Y - Used on PA-24-250 airplanes only.

When ordering, always specify Part Number, Description and Serial Number of Aircraft

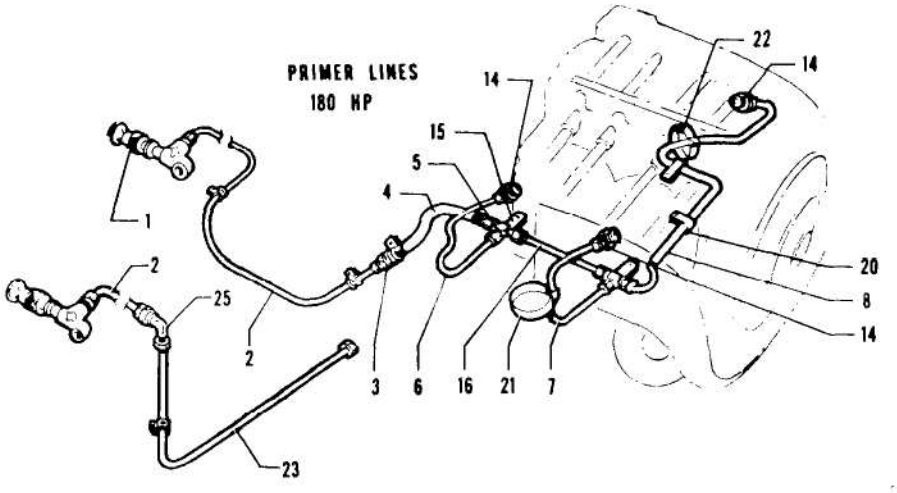

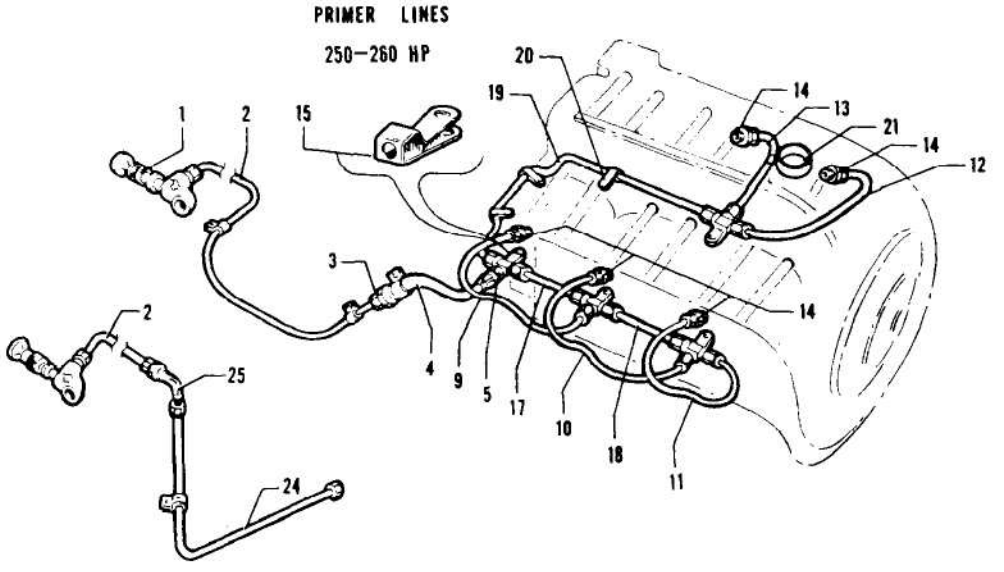

Figure 30D. Fuel Primer System Installation
(PA-24-180 and PA-24-250 - Serial Nos. 24-1 and up)
(PA-24-260 - Serial Nos. 24-3642, 24-4000 to 24-4782, 24-4784 to 24-4803 inclusive)

Figure and Index Number	Part Number	Code	NOMENCLATURE	No. Req.	SERIAL NUMBERS AFFECTED
30D-	20991	A	DRAWING - Fuel System Installation "180"		
	22373		DRAWING - Fuel System Installation "180"		24-2175, 24-2299 and up
	21669	A	DRAWING - Fuel System Installation "250"		
	22395		DRAWING - Fuel System Installation "250"		24-2299 to 24-2843 inclusive
	23190		DRAWING - Fuel System Installation "250"		24-2844 and up
	24926	B	DRAWING - Fuel System Installation "260"		
-1	451 100		PUMP - Primer	1	
-2	21152-00		LINE ASSEMBLY - Fuel primer	1	24-1 to 24-2201 inclusive
	21152-03		LINE ASSEMBLY - Fuel primer	1	24-2202 to 24-2843 inclusive
	21152-03		LINE ASSEMBLY - Fuel primer "180"	1	24-2844 to 24-3284 inclusive
	21152-06		LINE ASSEMBLY - Fuel primer "180"	1	24-3285 and up
	21152-06		LINE ASSEMBLY - Fuel primer "250" & "260"	1	24-2844 and up
-3	491 048		UNION - (AN815-2D)	1	
-4	17766-06		HOSE ASSEMBLY - Flexible (primer line)	1	
-5	488 318		TEE - (AN824-2D) (4 used on "250" & "260")	2	
-6	21125-00		LINE ASSEMBLY - Right rear primer "180"	1	
-7	21126-00		LINE ASSEMBLY - Right front primer "180"	1	
-8	21124-00		LINE ASSEMBLY - Left front primer "180"	1	
-9	21537-05		LINE ASSEMBLY - Right rear primer "250" & "260"	1	
-10	21537-04		LINE ASSEMBLY - Right center primer "250" & "260"	1	
-11	21537-03		LINE ASSEMBLY - Right front primer "250" & "260"	1	
-12	21537 06		LINE ASSEMBLY - Left front primer "250"	1	24-1 to 24-2843 inclusive
	22991-00		LINE ASSEMBLY - Left front primer "250" & "260"	1	24-2844 and up
-13	21537-02		LINE ASSEMBLY - Left center primer "250" & "260"	1	
-14	468 340		JET - Cylinder primer (5 used on "250" & "260")	3	
-15	23340-00		CLAMP - Primer line (4 used on "250" & "260")	2	
-16	21503-00		LINE ASSEMBLY - Primer "180"	1	
-17	21538-04		LINE ASSEMBLY - Primer "250" & "260"	1	
-18	21538-03		LINE ASSEMBLY - Primer "250" & "260"	1	
-19	21538-02		LINE ASSEMBLY - Primer "250" & "260"	1	
-20	80032-69		CLAMP - (3 used on "250" & "260")	2	
-21	21230-00		CLAMP - Primer line attachment (5 used on "250" & "260")	3	
-22	21230-02		CLAMP - Primer line attachment "180"	1	
-23	21538-10		LINE ASSEMBLY - Primer "180"	1	24-2175, 24-2299 to 24-3284
	21538-18		LINE ASSEMBLY - Primer "180"	1	24-3285 and up
-24	21538-12		LINE ASSEMBLY - Primer "250"	1	24-2299 to 24-2843 inclusive
	21538-14		LINE ASSEMBLY - Primer "250"	1	24-2844 to 24-3267 inclusive
	21538-16		LINE ASSEMBLY - Primer "250"	1	24-3268 to 24-3284 inclusive
	21538 18		LINE ASSEMBLY - Primer "250" & "260"	1	24-3285 and up
-25	458 876		ELBOW - (AN833-2D)	1	24-2175, 24-2299 to 24-2843
	458 947		ELBOW - (AN837-2D)	1	24-2844 to 24-3267 inclusive
	491 058		UNION - (AN832-2D)	1	24-3268 and up

A - Used on airplanes with serial numbers 24-1 to 24-2174 inclusive, 24-2176 to 24-2298 inclusive.

B - Used on airplanes without fuel injection, serial numbers 24-3642, 24-4000 to 24-4782, 24-4784 to 24-4803 inclusive.

When ordering, always specify Part Number, Description and Serial Number of Aircraft

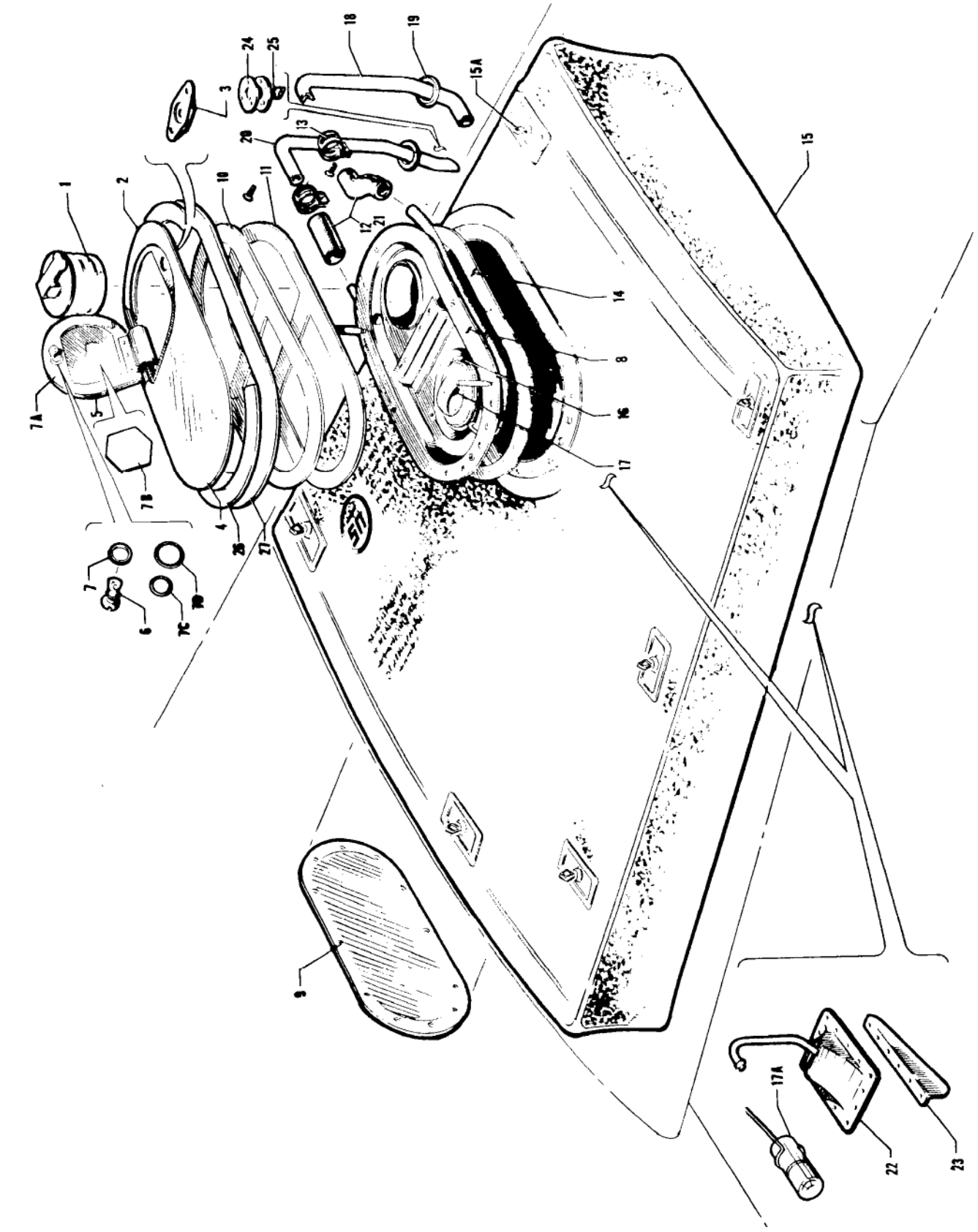

Figure 31. Fuel Cell Installation

Figure and Index Number	Part Number	Code	NOMENCLATURE	No. Req.	SERIAL NUMBERS AFFECTED
31-	20899		DRAWING - Fuel Cell Installation		24-1 to 24-2843 inclusive
	23030		DRAWING - Fuel Cell Installation "250" & "260"		24-2844 and up
	20899		DRAWING - Fuel Cell Installation "180"		
-1	25983-00		CAP - Fuel cell	2	24-1 to 24-580 inclusive
	21821-00		CAP - Fuel cell	2	24-581 to 24-4992 inclusive
	27221-00		CAP - Fuel cell	2	24-4993 and up
-2	20329-00		PLATE ASSEMBLY - Fuel cell cover	2	24-1 to 24-580 inclusive
	20329-04	A	PLATE ASSEMBLY - Fuel cell cover	2	24-2299 to 24-2843 inclusive
	20329-08	B	PLATE ASSEMBLY - Fuel cell cover	2	
	26249-03	AD	PLATE ASSEMBLY - Fuel cell cover	2	
	26249-07		PLATE ASSEMBLY - Fuel cell cover	2	24-4783, 24-4804 and up
-3	487 288		SPRING - (5-295)	1	24-1 to 24-580 inclusive
	484 342		RECEPTACLE - (212-12D)	1	24-581 and up
-4	20328-00		PLATE - Fuel cell access hole cover	1	24-1 to 24-580 inclusive
	20328-02		PLATE - Fuel cell access hole cover	1	24-581 and up
-5	20327-00		COVER ASSEMBLY - Fuel cell access hole	1	24-1 to 24-580 inclusive
	21817-00	C	COVER ASSEMBLY - Fuel cell access hole	1	
	26248-06		COVER ASSEMBLY - Fuel cell access hole	1	24-2175, 24-2299 and up
-6	487 592		STUD - Slotted head (S-F-160)	1	24-1 to 24-580 inclusive
	487 590		STUD - Wing (2600-5W) (with ring type cover gasket)	1	24-581 and up
	487 692		STUD - Wing (2600-8W) (with disc type cover gasket)	1	
	26246-00		STUD - Slotted head (with disc type cover gasket)	1	
-7	463 369		GROMMET - (GF150-C)	1	24-1 to 24-580 inclusive
	494 060		LOCK WASHER - (2600-LW)	1	24-581 and up
-7a	20327-03		GASKET - Cover (ring type)	1	
	25655-00		GASKET - Cover (disc type)	1	
-7b	25654-03		PLATE - Gasket retainer	1	
-7c	484 707		"O" RING - (AN6227B-3)	1	
-7d	484 708		"O" RING - (AN6227B-6)	1	
-8	20306-02		PLATE ASSEMBLY - Fuel cell access, RH	1	24-1 to 24-580 inclusive
	21810-01		PLATE ASSEMBLY - Fuel cell access, RH	1	24-581 to 24-1197 inclusive
	21810-05		PLATE ASSEMBLY - Fuel cell access, RH	1	24-1198 to 24-3517 inclusive
	23426-03		PLATE ASSEMBLY - Fuel cell access, RH	1	24-3518 and up
	20306-00		PLATE ASSEMBLY - Fuel cell access, LH	1	24-1 to 24-580 inclusive
	21810-00		PLATE ASSEMBLY - Fuel cell access, LH	1	24-581 to 24-1197 inclusive
	21810-04		PLATE ASSEMBLY - Fuel cell access, LH	1	24-1198 to 24-3517 inclusive
	23426-02		PLATE ASSEMBLY - Fuel cell access, LH	1	24-3518 and up

A - Used when auxiliary fuel system is not installed.
B - Used on PA-24-180 and PA-24-250 with serial numbers 24-581 and up, and PA-24-260 with serial numbers 24-3642, 24-4000 to 24-4782, 24-4784 to 24-4803 inclusive.
C - Used on airplanes with serial numbers 24-581 to 24-2174, 24-2176 to 24-2298 inclusive.
D - Used on PA-24-250 with serial numbers 24-2844 and up, and PA-24-260 with serial numbers 24-3642, 24-4000 to 24-4782, 24-4784 to 24-4803 inclusive.

When ordering, always specify Part Number, Description and Serial Number of Aircraft

Figure and Index Number	Part Number	Code	NOMENCLATURE	No. Req.	SERIAL NUMBERS AFFECTED
31-9	20333-00		PLATE - Access hole cover	2	
-10	20366-00	C	GASKET - Fuel cell cover plate, upper	2	
-11	20366-02		GASKET - Fuel cell cover plate, lower	2	
-12	82371-47		TUBE - Flexible, fuel cell vent	2	
-13	554 871		CLAMP - Hose (GS6SS Type "F")	2	
-14	462 014		GASKET - Fuel cell (FCB25752)	2	
-15	20355-01		CELL ASSEMBLY - Fuel, right	1	24-1 to 24-2843 inclusive
	20355-00		CELL ASSEMBLY - Fuel, left	1	24-1 to 24-2843 inclusive
	22942-01		CELL ASSEMBLY - Fuel, right "250"	1	24-2844 to 24-3557 inclusive
	22942-00		CELL ASSEMBLY - Fuel, left "250"	1	24-2844 to 24-3557 inclusive
	20355-01		CELL ASSEMBLY - Fuel, right "180"	1	24-2844 and up
	20355-00		CELL ASSEMBLY - Fuel, left "180"	1	24-2844 and up
	23799-01		CELL ASSEMBLY - Fuel, right "250" & "260"	1	24-3558 and up
	23799-00		CELL ASSEMBLY - Fuel, left "250" & "260"	1	24-3558 and up
-15a	752 016		HANGER - Fuel cell (295 055)	10	
-16	462 021		GASKET - Fuel tank gauge	2	
-17	20966-00		GAUGE ASSEMBLY - Fuel	2	
-17a	751 767		FLOAT - Fuel gauge	1	
-18	20244-00	A	TUBE - Fuel cell vent	2	24-1 to 24-3529 inclusive
19	434 140		GROMMET (AN931-12-20)	2	
-20	21818-02		TUBE - Fuel cell drain	2	24-581 to 24-1197 inclusive
	21885-03		TUBE - Fuel cell drain	2	24-1198 and up
-21	82371-37		HOSE - Flexible	2	24-581 to 24-1373 inclusive
	82371-47		HOSE - Flexible	2	24-1374 and up
-22	23464-00		VENT ASSEMBLY - Fuel cell, left	1	24-3530 and up
	23464-01		VENT ASSEMBLY - Fuel cell, right	1	24-3530 and up
-23	23478-00		PLATE - Fuel vent splash, left	1	24-3530 and up
	23478-01		PLATE - Fuel vent splash, right	1	24-3530 and up
-24	24353-02	B	GASKET - Fuel cell drain, "180" & "250"	2	
-25	24353-03	B	ADAPTER - Fuel cell drain, "180" & "250"	2	
-26	20332-00	C	SPACER - Reinforcement plate	2	
-27	20330-00	C	PLATE - Access hole reinforcement, left	1	
	26760-00	V	PLATE - Access hole reinforcement, left	1	24-4783, 24-4804 and up
	20330-02	C	PLATE - Access hole reinforcement, right	1	
	26760-01	V	PLATE - Access hole reinforcement, right	1	24-4783, 24-4804 and up

A - Used when auxiliary fuel system is not installed.
B - Used on serial numbers 24-581 to 24-3495 if Kit 756 756 has been installed.
C - Used on PA-24-180 and PA-24-250 with serial numbers 24-1 and up, and PA-24-260 with serial numbers 24-3642, 24-4000 to 24-4782, 24-4784 to 24-4803 inclusive.
V - Used on PA-24-260 airplanes only.

When ordering, always specify Part Number, Description and Serial Number of Aircraft

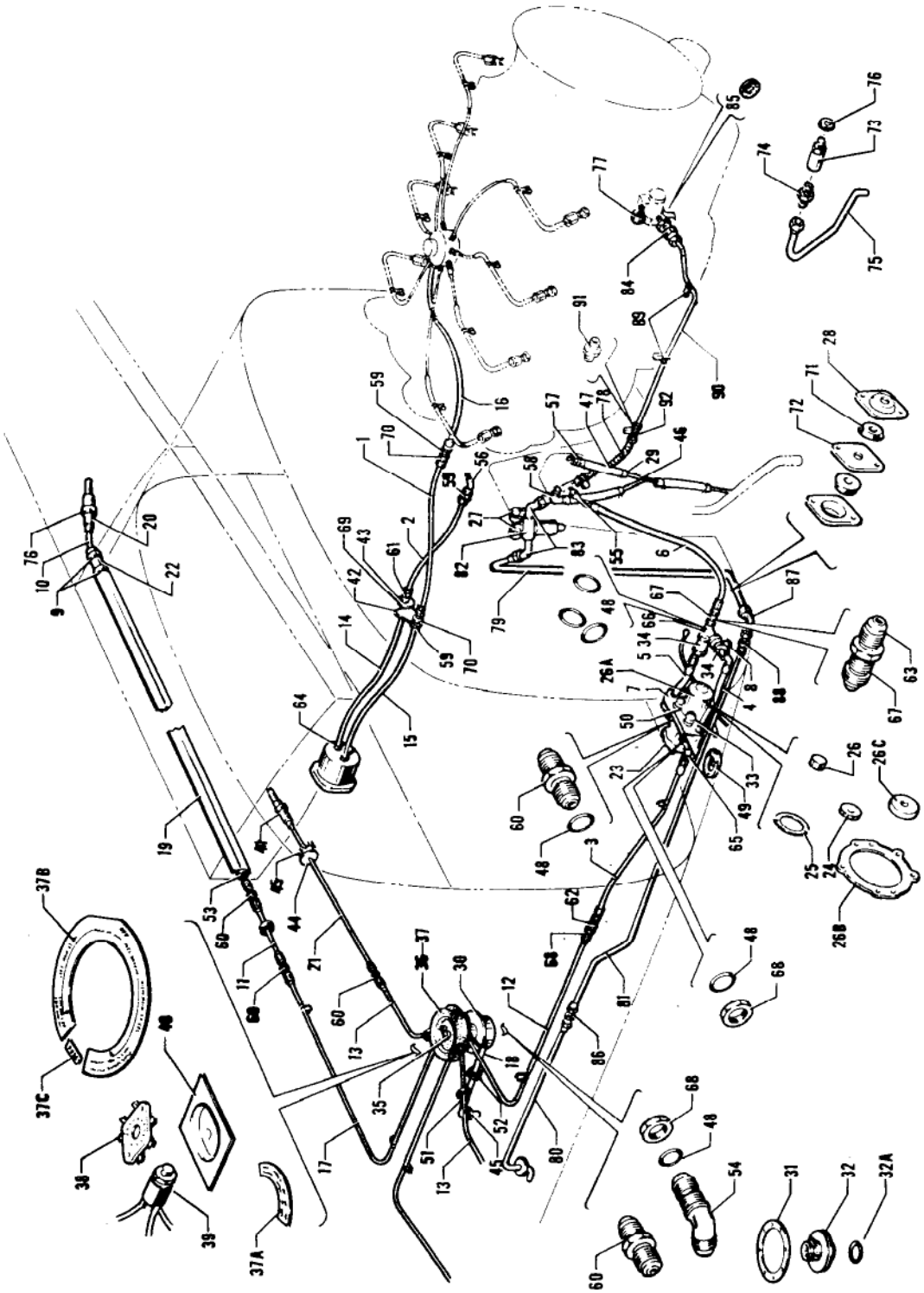

Figure 31A. Fuel System Installation "400"

Figure and Index Number	Part Number	Code	NOMENCLATURE	No. Req.	SERIAL NUMBERS AFFECTED
31A-	24415		DRAWING - Fuel System Installation		
	23174		DRAWING - Fuel Pump Installation		
-1	17766-41		HOSE ASSEMBLY - Flexible, fuel	1	
-2	17766-69		HOSE ASSEMBLY - Flexible, fuel	1	
-3	17766-63		HOSE ASSEMBLY - Flexible, fuel	1	
-4	17766-61		HOSE ASSEMBLY - Flexible, fuel, right	1	
-5	17766-64	A	HOSE ASSEMBLY - Flexible, fuel, left	1	
	17766-89	B	HOSE ASSEMBLY - Flexible, fuel, left	1	
-6	489 777		TUBE ASSEMBLY - Fuel (25551-03)	1	
-7	23073-00		BRACKET ASSEMBLY - Fuel pump support	1	
-8	21328-00		BRACKET - Check valve	1	
-9	454 863		CLAMP - (QS100-M6S)	4	
-10	22905-00		LINE ASSEMBLY - Fuel	2	
-11	22970-00		LINE ASSEMBLY - Fuel	2	
-12	23000-00		LINE ASSEMBLY - Fuel	1	
-13	23023-05		LINE ASSEMBLY - Fuel, left	1	
	23023-07		LINE ASSEMBLY - Fuel, right	1	
-14	23195-04		LINE ASSEMBLY - Fuel, left	1	
-15	23195-10		LINE ASSEMBLY - Fuel, right	1	
-16	23195-11		LINE ASSEMBLY - Fuel	1	
-17	24399-00		LINE ASSEMBLY - Fuel, left	1	
	24399-03		LINE ASSEMBLY - Fuel, right	1	
-18	22369-19		TUBE - Drain, fuel selector valve	1	
-19	22791-00		COVER ASSEMBLY - Fuel line	2	
-20	22824-00		STRAINER ASSEMBLY - Fuel tank finger, outboard	2	
-21	23019-00		STRAINER ASSEMBLY - Fuel tank finger, inboard	2	
-22	16633-46		HOSE - Fuel line	2	
-23	481 691		PUMP ASSEMBLY - Fuel (480 533)	1	
-24	752 497		NUT - Lock (908997-K36)	2	
-25	751 868		GASKET - Pump motor (478 484)	1	
-26	753 869		COUPLING - Shaft (478 486)	1	
-26a	753 777		MOTOR - CCW-12 Volt (479 313)	1	
-26b	751 917		GASKET - Pump (478 504)	1	
-26c	757 576		SEAL ASSEMBLY - Shaft (479 509)	1	
-27	80032-17	B	CLAMP - Purge valve	2	
-28	481 062		HOLDER - Grommet (#MT340)	2	
-29	454 983		CLAMP - Hose (#8)	4	
-30	492 084		VALVE - Fuel selector (#1H11)	1	
-31	751 871		GASKET - Filter	1	
-32	751 796		FILTER ASSEMBLY	1	
-32a	755 919		"O" RING - (Viton)	1	
-33	470 660		KIT - Fuel pump attachment	1	
-34	492 072	A	VALVE - Check (#K1332-6-10)	1	
	491 056	B	UNION - (AN815-6)	1	

A - Used if Kit 756 922 has not been installed per Service Letter #451.
B - Used if Kit 756 922 has been installed per Service Letter #451.

When ordering, always specify Part Number, Description and Serial Number of Aircraft

Figure and Index Number	Part Number	Code	NOMENCLATURE	No. Req.	SERIAL NUMBERS AFFECTED
31A-35	24419-00		HANDLE - Fuel valve	1	
-36	22828-00		PLATE ASSEMBLY - Fuel valve protector, gray	1	
	22828-05		PLATE ASSEMBLY - Fuel valve protector, brown	1	
-37	22782-00		PLATE - Fuel valve protector, gray	1	
	22782-02		PLATE - Fuel valve protector, brown	1	
-37a	24625-00		PLACARD - Fuel strainer drain	1	
-37b	24938-00		PLACARD - Fuel control	1	
-37c	24981-00		PLACARD - Fuel control	1	
-38	22843-00		SWITCH ASSEMBLY	1	
-39	487 842		SWITCH - (#923D)	4	
-40	24406-00		PLATE ASSEMBLY - Fuel valve	1	
-41	454 921		CLAMP - (QS100-M10)	4	
-42	22280-00		PLACARD - Firewall	1	
-43	23081-00		PLACARD - Firewall	1	
-44	23230-00		SEAL - Fuel line	2	
-45	16268-08		GROMMET - Fuel line	2	
	16268-06		GROMMET - Fuel drain line	1	
-46	16632-00		TUBE ASSEMBLY - Fuel drain connector	1	
-47	16633-38		HOSE - Flexible, fuel drain	2	
-48	462 060		GASKET - (MS29512-6)	10	
-49	463 391		GROMMET - Air vent (AN231-4)	1	
-50	19513-47		WASHER - Fuel pump	4	
-51	434 128		GROMMET - (AN931-4-7)	1	
-52	434 129		GROMMET - (AN931-5-9)	1	
-53	434 134		GROMMET - (AN931-6-10)	2	
-54	458 913		ELBOW - (AN837-6D)	4	
-55	458 871		ELBOW - (AN823-6)	1	
-56	458 876		ELBOW - (AN833-2D)	1	
-57	25039-00		FITTING ASSEMBLY - Fuel pump vent, restricted	1	
-58	451 857		ADAPTER - (AN840-4D)	1	
-59	23319-00		UNION - (491 065)	2	
-60	491 052		UNION - (AN815-6D)	8	
-61	491 064		UNION - (AN832-2)	1	
-62	491 062		UNION - (AN832-6D)	1	
-63	491 066		UNION - (AN832-6)	1	
-64	476 649		NIPPLE - (AN816-2D)	2	
-65	488 471		TEE - (AN834-6D)	1	
-66	488 472		TEE - (AN938-D6)	1	
-67	477 631		NUT - (AN924-6)	1	
-68	477 620		NUT - (AN924-6D)	6	
-69	477 619		NUT - (AN924-2D)	2	
-70	477 617		NUT - (AN924-3D)	2	
-71	22104-10		GROMMET - Firewall seal	2	
-72	22105-08		GASKET - Firewall seal	1	
-73	25116-00	A	VALVE ASSEMBLY - Fuel pressure relief	1	
-74	25117-00	A	FITTING ASSEMBLY - Fuel pressure relief valve	1	
-75	25118-00	A	TUBE ASSEMBLY - Fuel pressure relief drain	1	
-76	462 058		GASKET - (MS29512-4) Fuel pressure relief valve	1	

A - Used if Kit 756 922 has not been installed per Service Letter #451.

When ordering, always specify Part Number, Description and Serial Number of Aircraft

Figure and Index Number	Part Number	Code	NOMENCLATURE	No. Req.	SERIAL NUMBERS AFFECTED
31A-77	757 211	A	PLUG - (MS9015-04) Fuel injection	1	
-78	17766-104	B	HOSE ASSEMBLY - Purge valve to injector tube	1	
-79	25259-00	A	LINE ASSEMBLY - Fuel drain	1	
-80	25266-00	A	LINE ASSEMBLY - Fuel drain	1	
-81	25273-00	A	LINE ASSEMBLY - Fuel drain	1	
-82	492 103	A	VALVE ASSEMBLY - Purge (#V3900-05)	1	
-83	458 875	A	ELBOW - (AN822-4) Purge valve	2	
-84	484 306	A	REDUCER - (AN919-10) Fuel injector	1	
-85	462 061	A	GASKET - (MS29512-8) Fuel injector	1	
-86	491 050	A	UNION - (AN815-4D) Fuel drain line	1	
-87	458 934	A	ELBOW - (AN833-4) Fuel drain line	1	
-88	477 618	A	NUT - (AN924-4D) Fuel drain line	1	
-89	25020-03	B	CLAMP - Hose	2	
-90	25985-00	B	TUBE ASSEMBLY - Fuel	1	
-91	491 055	B	UNION - (AN815-4)	1	
-92	25020-00	B	CLAMP - Hose	1	

A - Used if Kit 756 922 has been installed per Service Letter #451.
B - Used if Kit 757 099 has been installed.

When ordering, always specify Part Number, Description and Serial Number of Aircraft

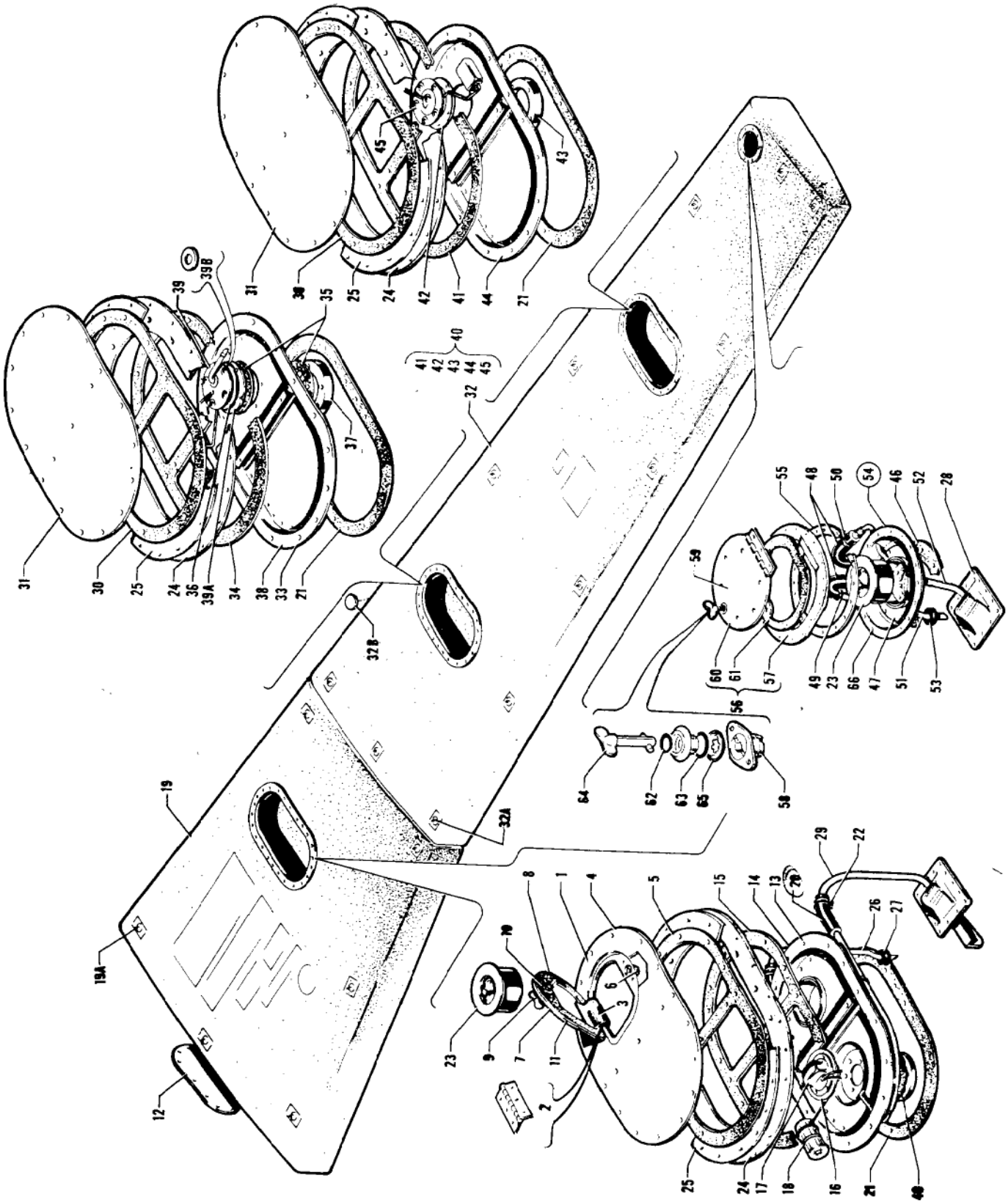

Figure 31B. Fuel Cell Installation "400"

Figure and Index Number	Part Number	Code	NOMENCLATURE	No. Req.	SERIAL NUMBERS AFFECTED
31B-	22890		DRAWING - Fuel Cell Compartment Installation, Outboard		
	22948		DRAWING - Fuel Cell Compartment Installation, Inboard		
	22999		DRAWING - Fuel Cell Installation, Outboard		
	23030		DRAWING - Fuel Cell Installation, Inboard		
-1	20329-09		PLATE ASSEMBLY - Fuel cell access hole cover	2	
-2	20325-00		HINGE ASSEMBLY - Access hole cover	1	
-3	20326-00		BRACKET - Access hole cover	1	
-4	20328-02		PLATE - Fuel cell access hole cover	1	
-5	20366-00		GASKET - Fuel cell cover plate, upper	1	
-6	484 342		RECEPTACLE - (#212-12D)	1	
-7	21817-09		COVER ASSEMBLY - Fuel cell access hole	1	
-8	20327-03		GASKET - Cover	1	
-9	487 590		STUD - (#2600-5W)	1	
-10	494 060		LOCK WASHER - (#2600-LW)	1	
-11	22474-06		COVER	1	
-12	20333-00		PLATE - Access hole cover	2	
-13	20899-02		PLATE ASSEMBLY - Fuel cell, left	1	
	20899-03		PLATE ASSEMBLY - Fuel cell, right	1	
-14	23426-02		PLATE ASSEMBLY - Fuel cell access hole, left	1	
	23426-03		PLATE ASSEMBLY - Fuel cell access hole, right	1	
-15	20366-02		GASKET - Fuel cell cover plate, lower	1	
-16	462 021		GASKET - Fuel tank gauge	1	
-17	20966-00		GAUGE ASSEMBLY - Fuel	1	
-18	751 767		FLOAT - Fuel gauge	1	
-19	23799-00		CELL ASSEMBLY - Fuel, inboard, left	1	
	23799-01		CELL ASSEMBLY - Fuel, inboard, right	1	
-19a	752 016		HANGER - Fuel cell (295 055)	9	
-20	82371-47		HOSE - Flexible	4	
-21	462 014		GASKET - Fuel cell (#FCB25752)	6	
-22	454 922		CLAMP - Hose	4	
-23	27221-00		CAP - Fuel cell	4	
-24	20330-00		PLATE - Access hole reinforcement, left	3	
	20330-02		PLATE - Access hole reinforcement, right	3	
-25	20332-00		SPACER - Reinforcement plate	12	
-26	21885-03		TUBE - Fuel cell drain	2	
-27	434 135		GROMMET - (AN931-8-13) Drain tube	2	
-28	23478-00		PLATE - Fuel vent splash, left	1	
	23478-01		PLATE - Fuel vent splash, right	1	
-29	23464-00		VENT ASSEMBLY - Fuel cell, left	1	
	23464-01		VENT ASSEMBLY - Fuel cell, right	1	
-30	20366-00		GASKET - Fuel cell cover plate	4	
-31	22303-02		PLATE - Fuel cell access hole cover	4	
-32	22703-00		CELL ASSEMBLY - Fuel, outboard, left	1	
	22703-01		CELL ASSEMBLY - Fuel, outboard, right	1	
-32a	752 016		HANGER - Fuel cell (295 055)	14	
-32b	758 141		BUTTON - Fuel cell, bottom (FCB-48009)	5	

Figure and Index Number	Part Number	Code	NOMENCLATURE	No. Req.	SERIAL NUMBERS AFFECTED
31B-33	22978-00		PLATE ASSEMBLY - Fuel cell access hole, left	1	
	22978-01		PLATE ASSEMBLY - Fuel cell access hole, right	1	
-34	20366-02		GASKET - Fuel cell plate assembly	1	
-35	23330-00		GASKET - Fuel cell sender unit	2	
-36	462 019		GASKET - Fuel cell gauge	1	
-37	23164-00		INSULATOR ASSEMBLY - Fuel cell sender unit	1	
-38	22978-02		PLATE - Fuel cell access hole, left	1	
	22978-03		PLATE - Fuel cell access hole, right	1	
-39	450 771		GAUGE ASSEMBLY - Fuel (#GG5641947)	1	
-39a	25252-00		REINFORCEMENT - Fuel cell sender unit	1	
-39b	494 098		WASHER - Seal, fuel cell sender unit	6	
-40	22977-00		PLATE ASSEMBLY - Fuel cell access hole, left	1	
	22977-01		PLATE ASSEMBLY - Fuel cell access hole, right	1	
-41	20366-02		GASKET - Fuel cell plate assembly	1	
-42	462 019		GASKET - Fuel cell gauge	1	
-43	13001-02		PLATE - Fuel gauge mounting	1	
-44	22977-02		PLATE - Fuel cell access hole, left	1	
	22977-03		PLATE - Fuel cell access hole, right	1	
-45	450 772		GAUGE ASSEMBLY - Fuel (#GG5641948)	1	
-46	22846-00		GASKET - Fuel cell	2	
-47	23542-00		PLATE - Fuel cell attachment	2	
-48	455 149		CONNECTION - Drain and vent tubes	4	
-49	454 949		CLAMP - Drain connector	4	
-50	454 855		CLAMP - Vent connector	4	
-51	23468-00		TUBE - Fuel cell drain, left	1	
	23468-01		TUBE - Fuel cell drain, right	1	
-52	24041-00		VENT ASSEMBLY - Fuel cell, left	1	
	24041-01		VENT ASSEMBLY - Fuel cell, right	1	
-53	434 138		GROMMET - (AN931-10-14) Drain tube	2	
-54	22987-00		NECK ASSEMBLY - Fuel cell filler, outboard, left	1	
	22987-01		NECK ASSEMBLY - Fuel cell filler, outboard, right	1	
-55	19274-00		SPACER - Reinforcement plate, left	1	
	19274-01		SPACER - Reinforcement plate, right	1	
-56	19156-10		PLATE ASSEMBLY - Fuel cell filler neck cover, left	1	
	19156-11		PLATE ASSEMBLY - Fuel cell filler neck cover, right	1	
-57	16090-00		PLATE ASSEMBLY - Reinforcement, left	1	
	16090-01		PLATE ASSEMBLY - Reinforcement, right	1	
-58	484 342		RECEPTACLE - (#212-12D)	1	
-59	22982-00		PLATE ASSEMBLY - Filler neck cover (complete)	1	
-60	19047-04		PLATE ASSEMBLY - Filler neck cover	1	
-61	19051-00		GASKET - Filler neck cover plate	1	
-62	484 707		PACKING - "O" Ring (AN6227B-3)	1	
-63	484 708		PACKING - "O" Ring (AN6227B-6)	1	
-64	487 590		STUD - (#2600-5W)	1	
-65	494 060		LOCK WASHER - (#2600-LW)	1	
-66	22760-00		PLATE ASSEMBLY - Fuel cell filler neck, left	1	
	22760-01		PLATE ASSEMBLY - Fuel cell filler neck, right	1	

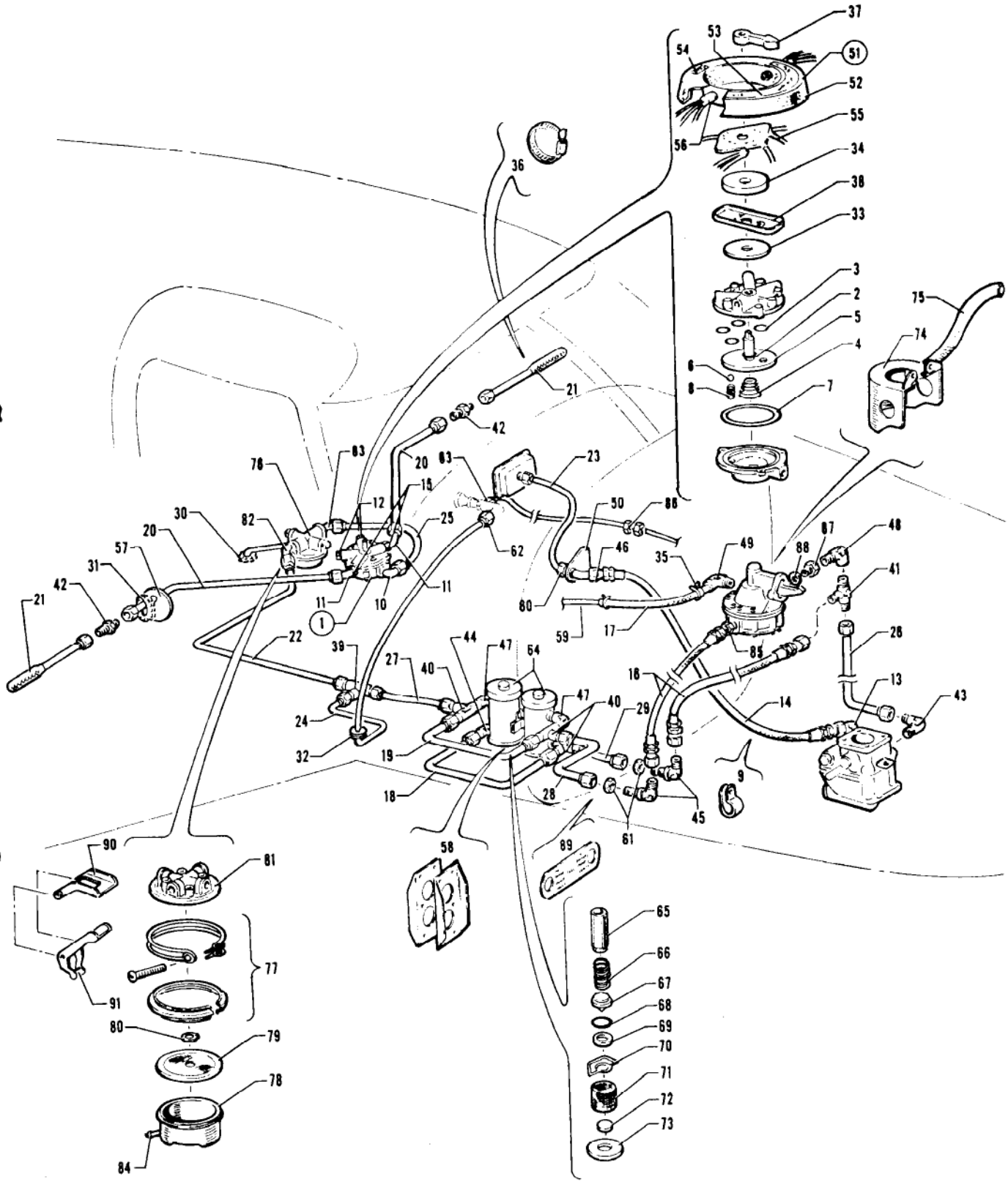

Figure 31C. Fuel System Installation
(Serial Nos. 24-3642, 24-4000 to 24-4782, 24-4784 to 24-4803 inclusive)

Figure and Index Number	Part Number	Code	NOMENCLATURE	No. Req.	SERIAL NUMBERS AFFECTED
31C-	24926		DRAWING - Fuel System Installation		
-1	492 068		VALVE - Fuel selector (A73V)	1	
-2	752 742		PACKING - "O" Ring (MS29513-10)	1	
-3	755 826		PACKING - "O" Ring (A106-520)	4	
-4	756 123		SPRING - (A110-130)	1	
-5	753 115		VALVE - Rotary (A104-380)	1	
-6	751 449		BALL - (A134-10)	1	
-7	752 850		PACKING - "O" Ring (MS29513-148)	1	
-8	756 122		SPRING - (A110-129)	1	
-9	80032-10		CLAMP	1	
-10	458 897		ELBOW - (AN822-5-4D) 90°	1	
-11	458 890	B	ELBOW - (AN823-5D) 45°	2	
-12	480 937	B	PLUG - (W/H 3152 x 4)	2	
-13	22114-00		ELBOW	1	
-14	17766-43		HOSE ASSEMBLY - Flexible (fuel pressure)	1	
-15	453 616	B	BUSHING - (AN912-1D)	2	
-16	17766-87		HOSE ASSEMBLY - Flexible (fuel line)	2	
-17	16633-50		HOSE - Flexible (fuel line)	1	
-18	21657-05		LINE ASSEMBLY - Fuel	1	
-19	21657-03		LINE ASSEMBLY - Fuel	1	
-20	23023-03		LINE ASSEMBLY - Fuel	2	
-21	23019-03		STRAINER ASSEMBLY - Fuel tank finger	2	
-22	22275-00		LINE ASSEMBLY - Fuel	1	
-23	21163-05		LINE ASSEMBLY - Fuel pressure	1	
-24	21150-03		LINE ASSEMBLY - Fuel	1	
-25	22282-03		LINE ASSEMBLY - Fuel	1	
-26	23317-00		LINE ASSEMBLY - Fuel	1	
-27	24891-04		LINE ASSEMBLY - Fuel	1	
-28	24891-05		LINE ASSEMBLY - Fuel	1	
-29	24892-00		LINE ASSEMBLY - Fuel	1	
-30	16268-06		GROMMET	1	
-31	16268-08		GROMMET	2	
-32	434 125		GROMMET - (AN931-2-9)	1	
-33	19513-51		WASHER	1	
-34	19513-50		WASHER	1	
-35	454 983		CLAMP - Hose (SAE #8)	2	
-36	454 921		CLAMP - Hose (QS100-M10)	2	
-37	22175-00		HANDLE - Fuel valve	1	
-38	22216-00		BRACKET ASSEMBLY - Selector valve mounting	1	
-39	22256-00		TEE	1	
-40	24913-00		TEE	3	
-41	488 314		TEE - (AN826-6D)	1	
-42	491 051		UNION - (AN815-5D)	2	

A - Used on airplanes with serial numbers 24-3642, 24-4000 to 24-4782, 24-4784 to 24-4803 inclusive.
B - See Figure 30C if Auxiliary Fuel System is installed.

When ordering, always specify Part Number, Description and Serial Number of Aircraft

Figure and Index Number	Part Number	Code	NOMENCLATURE	No. Req.	SERIAL NUMBERS AFFECTED
31C-43	458 895		ELBOW - (AN822-6D)	1	
-44	458 866		ELBOW - (AN822-6-2D)	1	
-45	458 864		ELBOW - (AN837-6)	2	
-46	458 909		ELBOW - (AN837-3D)	1	
-47	458 904		ELBOW - (AN914-1D)	2	
-48	458 919		ELBOW - (AN914-2D)	1	
-49	458 948		ELBOW - (#1K1-2-4)	1	
-50	22280-00		PLACARD	1	
-51	22838-00	D	PLATE ASSEMBLY - Fuel selector protector, gray (complete)	1	
	22838-06	D	PLATE ASSEMBLY - Fuel selector protector, black (complete)	1	
-52	22795-00	D	PLATE - Fuel selector protector, gray	1	
	22795-09	D	PLATE - Fuel selector protector, black	1	
-53	24971-00	D	PLACARD - Fuel control	1	
-54	24981-00		PLACARD - Fuel control	1	
-55	22843-00		SWITCH ASSEMBLY - Fuel selector	1	
-56	487 842		SWITCH - (#923D)	2	
-57	23230-00		SEAL - Fuel line	2	
-58	24719-00		CHANNEL - Fuel pump support	2	
-59	24920-00		TUBE - Fuel pump drain	1	
-60	477 617		NUT - (AN924-3D)	1	
-61	477 620		NUT - (AN924-6D)	2	
-62	460 684		NUT - (W/H #W61 x 2)	2	
-63	460 683		SLEEVE - (W/H #W60 x 2)	2	
-64	481 666		PUMP ASSEMBLY - Fuel (electric)	2	
-65	755 803		PLUNGER ASSEMBLY - (476 474)	1	
-66	756 108		SPRING - (475 127)	1	
-67	753 119		CUP VALVE - (479 132)	1	
-68	756 162		SEAL - "O" Ring (479 139)	1	
-69	753 193		WASHER - (479 138)	1	
-70	752 869		RETAINER - (479 137)	1	
-71	751 799		SCREEN - Filter (479 135)	1	
-72	753 650		MAGNET - (479 012)	1	
-73	751 872		GASKET - Cover (479 136)	1	
-74	25006-00	E	BAFFLE ASSEMBLY - Fuel pump	1	
-75	22502-62	E	TUBE - Baffle assembly	1	
-76	22312-00		STRAINER ASSEMBLY - Fuel	1	
-77	22306-00		CLAMP ASSEMBLY	1	
-78	22034-00		BOWL ASSEMBLY	1	
-79	22458-00		SCREEN - Fuel strainer	1	
-80	484 728		SNAP RING - (#5100-50)	1	
-81	22035-02		COVER - Fuel strainer	1	
-82	458 892		ELBOW - 45° (AN823-6D) (to engine)	1	
-83	458 897		ELBOW - 90° (AN822-5-4D) (from fuel valve)	1	
-84	22179-00		DRAIN VALVE ASSEMBLY	1	
-85	476 662	B	NIPPLE - (AN816-6D)	1	24-3642, 24-4000 to 24-4200 incl.
	491 052	C	UNION - (AN815-6D)	1	24-4201 and up

A - Used on airplanes with serial numbers 24-3642, 24-4000 to 24-4782, 24-4784 to 24-4803 inclusive.
B - Used when engine fuel pump A.C. #6440174 is installed.
C - Used when engine fuel pump A.C. #6440295 is installed.
D - See Figure 30C if Auxiliary Fuel System is installed.
E - See Figure 24E if Fuel Injection is installed.

Figure and Index Number	Part Number	Code	NOMENCLATURE	No. Req.	SERIAL NUMBERS AFFECTED
31C-86	477 619		NUT - (AN924-2D)	1	
-87	451 879	B	ADAPTER - (#6F5G-S)	1	24-4200 and up
-88	462 060	B	GASKET - (MS29512-6)	2	24-4201 and up
-89	25363-00		PLACARD - Fuel pump lines	1	
-90	22243-00		BRACKET ASSEMBLY - Fuel strainer	1	
-91	22265-00		BRACKET - Fuel strainer	1	

A - Used on airplanes with serial numbers 24-3642, 24-4000 to 24-4782, 24-4784 to 24-4803 inclusive.
B - Used when engine fuel pump A.C. #6440295 is installed.

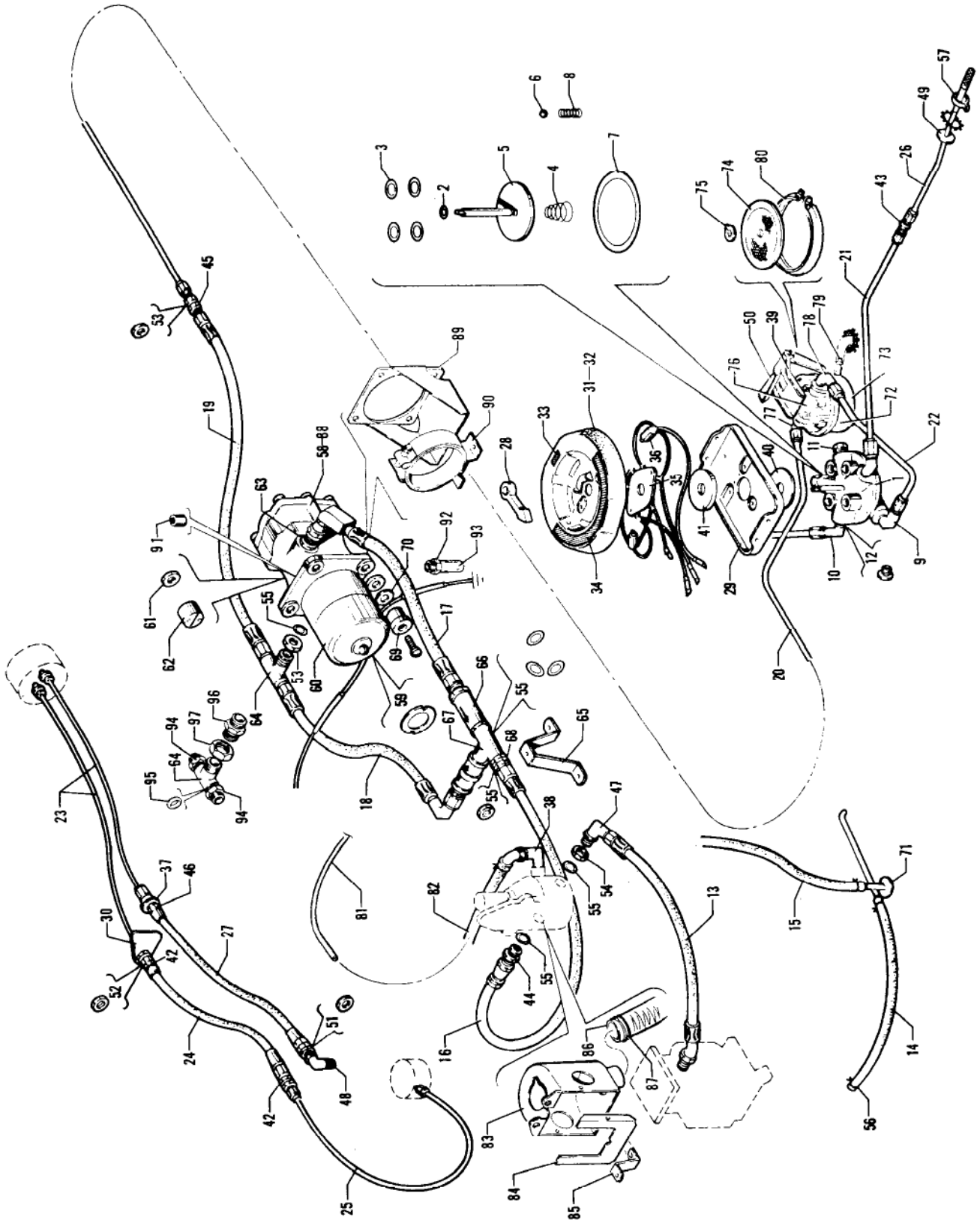

Figure 31D. Fuel System Installation
(Serial Nos. 24-4783, 24-4804 and up)

Figure and Index Number	Part Number	Code	NOMENCLATURE	No. Req.	SERIAL NUMBERS AFFECTED
31D-	26623		DRAWING - Fuel System Installation		
	24906		DRAWING - Fuel Pump Installation (Bendix)		
	27232		DRAWING - Fuel Pump Installation (Dukes)		
-1	492 068		VALVE - Fuel selector (A73V)	1	
-2	752 742		PACKING - "O" Ring (MS29513-10)	1	
-3	755 826		PACKING - "O" Ring (A106-520)	4	
-4	756 123		SPRING - (A110-130)	1	
-5	753 115		VALVE - Rotary (A104-380)	1	
-6	751 449		BALL - (A134-10)	1	
-7	752 850		PACKING - "O" Ring (MS29513-148)	1	
-8	756 122		SPRING - (A110-129)	1	
-9	458 897		ELBOW - (AN822-5-4D) 90°	1	
-10	458 890	A	ELBOW - (AN823-5D) 45°	2	
-11	480 937	A	PLUG - (W/H 3152 x 4)	2	
-12	453 616	A	BUSHING - (AN912-1D)	2	
-13	39999-07		HOSE ASSEMBLY - Flexible	1	
-14	29997-03		HOSE - Air induction tube drain	1	
-15	16633-71	B	HOSE - Fuel pump drain	1	
-16	25551-02		TUBE ASSEMBLY - Flexible	1	
-17	17766-64		HOSE ASSEMBLY - Fuel pump	1	
-18	17766-61		HOSE ASSEMBLY - Fuel pump	1	
-19	17766-63		HOSE ASSEMBLY - Fuel	1	
-20	23070-00		LINE ASSEMBLY - Fuel	1	
-21	23023-03		LINE ASSEMBLY - Fuel	2	
-22	22282-03		LINE ASSEMBLY - Fuel	1	
-23	23195-10		LINE ASSEMBLY - Fuel	2	
-24	17766-21		HOSE ASSEMBLY - Flexible	1	
-25	23195-02		LINE ASSEMBLY - Fuel	1	
-26	23019-03		STRAINER ASSEMBLY - Fuel tank finger	2	
-27	39999-05		HOSE ASSEMBLY - Flexible	1	
-28	22175-00		HANDLE - Valve	1	
-29	22216-00		BRACKET ASSEMBLY - Selector valve mounting	1	
-30	22280-00		PLACARD - Line identification (firewall)	1	
-31	22838-06		PLATE ASSEMBLY - Fuel valve protector (complete) black	1	
	22838-07	A	PLATE ASSEMBLY - Fuel valve protector (complete) red	1	
	22838-08	A	PLATE ASSEMBLY - Fuel valve protector (complete) blue	1	
	22838-09	A	PLATE ASSEMBLY - Fuel valve protector (complete) beige	1	
-32	22795-09	A	PLATE ASSEMBLY - Fuel valve protector, black	1	
	22795-11	A	PLATE ASSEMBLY - Fuel valve protector, red	1	
	22795-13	A	PLATE ASSEMBLY - Fuel valve protector, blue	1	
	22795-15	A	PLATE ASSEMBLY - Fuel valve protector, beige	1	
-33	24981-00		PLACARD - Fuel control	1	
-34	24971-00	A	PLACARD - Fuel control	1	
-35	22843-00		SWITCH ASSEMBLY - Fuel selector	1	
-36	487 842		SWITCH - (#923D)	2	

A - Refer to Figure 30C if Auxiliary Fuel System is installed.
B - Not used if RaJay Turbocharger is installed.

When ordering, always specify Part Number, Description and Serial Number of Aircraft

Figure and Index Number	Part Number	Code	NOMENCLATURE	No. Req.	SERIAL NUMBERS AFFECTED
31D-37	23081-00		PLACARD - Line identification (firewall)	1	
-38	23333-04		VALVE ASSEMBLY - Check	1	
-39	22265-00		BRACKET - Fuel strainer	1	
-40	19513-51		WASHER	1	
-41	19513-50		WASHER	1	
-42	23319-00		UNION - Fuel line	2	
-43	491 051		UNION - (AN815-5D)	2	
-44	491 056		UNION - (AN815-6)	1	
-45	491 062		UNION - (AN832-6D)	1	
-46	491 058		UNION - (AN832-2D)	1	
-47	458 936		ELBOW - (AN833-6)	1	
-48	458 876		ELBOW - (AN833-2D)	1	
-49	23230-00		SEAL - Fuel line	2	
-50	22243-00		BRACKET ASSEMBLY - Fuel strainer	1	
-51	477 619		NUT - (AN924-2D)	1	
-52	477 617		NUT - (AN924-3D)	2	
-53	477 620		NUT - (AN924-6D)	2	
-54	477 631		NUT - (AN924-6)	2	
-55	462 060		GASKET - (MS29512-6)	7	
-56	454 983		CLAMP - Hose (SAE #8)	4	
-57	454 921		CLAMP - Hose (QS100-M10)	2	
-58	481 686	AC	PUMP ASSEMBLY - (#480528) Bendix	1	24-4783, 24-4804 to 24-4978 incl.
-59	751 868	A	GASKET - Pump motor (478 484)	1	
-60	753 637	A	MOTOR - CCW-12 Volt (479 272)	1	
-61	752 492	A	NUT - Lock #10-32 (478 483)	1	
-62	753 869	A	COUPLING - Shaft (478 486)	1	
-63	491 052	A	UNION - (AN815-6D)	1	
-64	488 471	A	TEE - (AN834-6D)	1	24-4783, 24-4804 to 24-4978 incl.
	488 472	AD	TEE - (AN938-D6)	1	24-4979 and up
-65	21328-05		BRACKET - Check valve	1	
-66	492 072		VALVE - Check (K1332-6-10)	2	
-67	488 472		TEE - (AN938-D6)	1	
-68	491 066		UNION - (AN832-6)	1	
-69	470 660		KIT ASSEMBLY - Fuel pump mounting (479 224)	1	
-70	19513-47		WASHER	4	
-71	27070-00		TUBE ASSEMBLY - Drain connector	1	
	23194-00	B	TUBE ASSEMBLY - Drain connector	1	

A - Not used if RaJay Turbocharger is installed. Refer to Figure 24G or RaJay Corporation Parts Catalog for component parts.
B - Used if RaJay Turbocharger is installed.
C - If Dukes Pump Assembly (#4140-00-218) has been installed, order Part No. 481 740.
D - Used on 24-4783, 24-4804 to 24-4978 inclusive if Dukes Pump Assembly has been installed.

Figure and Index Number	Part Number	Code	NOMENCLATURE	No. Req.	SERIAL NUMBERS AFFECTED
31D-72	22312-00		STRAINER ASSEMBLY - Fuel	1	
-73	22034-00		BOWL ASSEMBLY	1	
-74	22458-00		SCREEN - Fuel strainer	1	
-75	484 728		SNAP RING - (#5100-50)	1	
-76	22035-02		COVER - Fuel strainer	1	
-77	458 892		ELBOW - 45° (AN823-6D) (to engine)	1	
-78	458 897		ELBOW - 90° (AN822-5-4D) (from fuel valve)	1	
-79	22179-00		DRAIN VALVE ASSEMBLY	1	
-80	22306-00		CLAMP ASSEMBLY - Fuel strainer	1	
-81	24920-00	B	TUBE ASSEMBLY - Fuel pump drain	1	
-82	16633-50	B	HOSE - Fuel pump drain	1	
-83	24558-00	A	BAFFLE ASSEMBLY - Fuel pump	1	
-84	23304-00	A	COVER - Baffle assembly	1	
-85	23812-00	A	LUG - Baffle assembly	1	
-86	22502-61	A	TUBE - Baffle assembly	1	
-87	454 815	A	CLAMP - (H.1-1400)	2	
-88	481 740	AC	PUMP ASSEMBLY - (#4140-00-218) Dukes	1	24-4979 and up
-89	27223-00	AC	BRACKET ASSEMBLY - Fuel pump mounting	1	24-4979 and up
-90	27224-00	AC	CLAMP ASSEMBLY - Fuel pump mounting	1	2 -4979 and up
-91	581 783	AC	PLUG - (AN932-D1)	1	24-4979 and up
-92	451 909	AC	ADAPTER - (=2140-52)	1	24-4979 and up
-93	22369-14	AC	TUBE - Plastic	1	24-4979 and up
-94	491 052	AC	UNION - (AN815-6D)	2	24-4979 and up
-95	462 060	AC	GASKET - (MS29512-6)	3	24-4979 and up
-96	491 062	AC	UNION - (AN832-6D)	1	24-4979 and up
-97	477 620	AC	NUT - (AN924-6D)	1	24-4979 and up

A - Not used if RaJay Turbocharger is installed. Refer to Figure 24G or RaJay Corporation Parts Catalog for component parts.
B - Used if RaJay Turbocharger is installed.
C - Used on 24-4783, 24-4804 to 24-4978 inclusive if Dukes Pump Assembly has been installed.

When ordering, always specify Part Number, Description and Serial Number of Aircraft



Figure 32. Forward Electrical System Installation

Figure and Index Number	Part Number	Code	NOMENCLATURE	No. Req.	SERIAL NUMBERS AFFECTED
32-	21754	A	DRAWING - Stall Warning Indicator Installation		
	20852	X	DRAWING - Electrical System Installation		24-1 to 24-102 inclusive
	21581	XY	DRAWING - Electrical System Installation		24-103 to 24-2201 inclusive
	22149	X	DRAWING - Electrical System Installation		24-2202 to 24-2298 inclusive
	22150	Y	DRAWING - Electrical System Installation		24-2202 to 24-2298 inclusive
	22350	B	DRAWING - Electrical System Installation		
	22800	Y	DRAWING - Electrical System Installation		24-2844 and up
	23385	X	DRAWING - Electrical System Installation		24-3285 and up
	24380	Z	DRAWING - Electrical System Installation		
	24848	C	DRAWING - Electrical System Installation		
	26827	V	DRAWING - Electrical System Installation		24-4783, 24-4804 and up
	22812	X	DRAWING - Electrical System Engine Compartment		24-3285 and up
	22813	Y	DRAWING - Electrical System Engine Compartment		24-2844 and up
	22814	Z	DRAWING - Electrical System Engine Compartment		
	24850	V	DRAWING - Electrical System Engine Compartment		24-3642, 24-4000 to 24-4246 incl., 24-4248 to 24-4299 inclusive
	25400	D	DRAWING - Electrical System Engine Compartment		
	26818	V	DRAWING - Electrical System Engine Compartment		24-4783, 24-4804 and up
	20855	X	DRAWING - Wiring Diagram		24-1 to 24-102 inclusive
	21551	XY	DRAWING - Wiring Diagram		24-103 to 24-655 inclusive
	21840	XY	DRAWING - Wiring Diagram		24-656 to 24-2201 inclusive
	22127	X	DRAWING - Wiring Diagram		24-2202 to 24-2298 inclusive
	22128	Y	DRAWING - Wiring Diagram		24-2202 to 24-2298 inclusive
	22347	XY	DRAWING - Wiring Diagram		24-2299 to 24-2843 inclusive
	22759	X	DRAWING - Wiring Diagram		24-2844 and up
	22698	Y	DRAWING - Wiring Diagram		24-2844 and up
	24372	Z	DRAWING - Wiring Diagram		
	24847	V	DRAWING - Wiring Diagram		24-3642, 24-4000 to 24-4472 incl.
	25650	V	DRAWING - Wiring Diagram		24-4473 to 24-4609 inclusive
	25744	V	DRAWING - Wiring Diagram		24-4610 to 24-4782 inclusive, 24-4784 to 24-4803 inclusive
	26799	V	DRAWING - Wiring Diagram		24-4783, 24-4804 and up
	24889	C	DRAWING - Electric Stabilator Trim Installation		
	26754	V	DRAWING - Electric Stabilator Trim Installation		24-4783, 24-4804 and up
-1	18320-07	XY	DISC - Firewall seal, rear	1	24-1 to 24-2201 inclusive
	18320-08	XY	DISC - Firewall seal, rear	1	24-2202 to 24-2298 inclusive
-2	18320-02	XY	DISC - Firewall seal, forward	1	24-1 to 24-2298 inclusive
-3	18321-00	XY	PLATE - Firewall seal	4	24-1 to 24-2298 inclusive

A - Used on PA-24-250 with serial numbers 24-2175, 24-2299 and up, PA-24-400 and PA-24-260 with serial numbers 24-3642, 24-4000 to 24-4609 inclusive.
B - Used on PA-24-180 with serial numbers 24-2299 to 24-3284 and PA-24-250 with serial numbers 24-2299 to 24-2843 inclusive.
C - Used on PA-24-260 with serial numbers 24-3642, 24-4000 to 24-4782, 24-4784 to 24-4803 inclusive.
D - Used on PA-24-260 with serial numbers 24-4247, 24-4300 to 24-4782, 24-4784 to 24-4803 inclusive.
V - Used on PA-24-260 airplanes only.
X - Used on PA-24-180 airplanes only.
Y - Used on PA-24-250 airplanes only.
Z - Used on PA-24-400 airplanes only.

Figure and Index Number	Part Number	Code	NOMENCLATURE	No. Req.	SERIAL NUMBERS AFFECTED
32-4	14311-39	XY	BOX ASSEMBLY - Magneto filter	1	24-1 to 24-2201 inclusive
	14311-44	XY	BOX ASSEMBLY - Magneto filter	1	24 2202 and up
-5	487 149	D	SOLENOID - Starter	1	
-6	14226-16	X	CABLE ASSEMBLY - Starter	1	24-103 to 24-2201 inclusive
	14226-30	Y	CABLE ASSEMBLY - Starter	1	24-103 to 24-3656 inclusive
	14226-26	X	CABLE ASSEMBLY - Starter	1	24-2202 and up
	14226-26	Y	CABLE ASSEMBLY - Starter	1	24-3657 and up
	14226-25	Z	CABLE ASSEMBLY - Starter	1	
	14226-30	V	CABLE ASSEMBLY - Starter	1	
-7	187 069	Z	SLEEVE - Fire protection, starter cable	52"	
-8	19233-02	XY	HORN ASSEMBLY - Landing gear warning	1	
	465 162	VZ	HORN ASSEMBLY - Landing gear warning	1	24-3642, 24-4000 to 24-4788 incl., 26-2 and up
	565 325	V	HORN ASSEMBLY - Landing gear warning	1	24-4789 and up
-9	21101-00	X	BRACKET - Nose gear switch mounting	1	24-1 to 24-987 inclusive
	21699-00	Y	BRACKET - Nose gear switch mounting	1	24-1 to 24-1022 inclusive
	21868-00	XYZ	BRACKET - Nose gear switch mounting	1	24-1023 and up, 26-2 and up
	24916-00	V	BRACKET - Nose gear switch mounting	1	
-10	487 820	XYZ	SWITCH - Nose gear (8AS28)	1	
	487 862	V	SWITCH - Nose gear (1CH21-4)	1	
-11	17807-00	B	GUARD - Motor arm switch	5	
	17807-00	A	GUARD - Motor arm switch	3	
-12	404 820		NUT - Motor arm switch (USAF-356-820) (4 used on "250")	3	
-13	462 042	XY	BULB ASSEMBLY - Oil temperature	1	
	462 046	VZ	BULB ASSEMBLY - Oil temperature	1	
-14	462 012		GASKET - Oil temperature bulb	1	
-15	80032-68	XY	CLAMP - Starter cable	1	
	25020-00	C	CLAMP - Starter cable	1	
	25020 05	V	CLAMP - Starter cable	1	24-4783, 24-4804 and up

A - Used on PA-24-180 and PA-24-250 with serial numbers 24-2175, 24-2299 and up, PA-24-400 and PA-24-260.
B - Used on PA-24-180 and PA-24-250 with serial numbers 24-1 to 24-2174 inclusive, 24-2176 to 24-2298 inclusive.
C - Used on PA-24-260 with serial numbers 24-3642, 24-4000 to 24-4782, 24-4784 to 24-4803 inclusive, and PA-24-400 with serial numbers 26-2 and up.
D - Used on PA-24-180 and PA-24-250 with serial numbers 24-1 and up, PA-24-260 with serial numbers 24-3642, 24-4000 to 24-4782, 24-4784 to 24-4803 inclusive, and PA-24-400 with serial numbers 26-2 and up.
V - Used on PA-24-260 airplanes only.
X - Used on PA-24-180 airplanes only.
Y - Used on PA-24-250 airplanes only.
Z - Used on PA-24-400 airplanes only.

Figure and Index Number	Part Number	Code	NOMENCLATURE	No. Req.	SERIAL NUMBERS AFFECTED
32-16	14314-02	FY	SWITCH ASSEMBLY - Ignition (with two keys)	1	24-1 to 24-2201 inclusive
	14314-02	FJX	SWITCH ASSEMBLY - Ignition (with two keys)	1	
	756 115	DEY	SWITCH ASSEMBLY - Ignition (with two keys)	1	
	756 115	CEX	SWITCH ASSEMBLY - Ignition (with two keys)	1	
	756 115	GH	SWITCH ASSEMBLY - Ignition (with two keys)	1	
-17	25855-00		CORD ASSEMBLY - Map light (complete with light)	1	
-18	17604-04	X	CABLE ASSEMBLY - Ground	1	
	17604-15	VY	CABLE ASSEMBLY - Ground, left	1	
	17604-16	VY	CABLE ASSEMBLY - Ground, right	1	
	17604-16	Z	CABLE ASSEMBLY - Ground	2	
-19	460 634	XY	FILTER - Magneto	2	
-20	21249-14	XY	SEAL - Firewall, battery cable front	1	
-21	21249-15	XY	SEAL - Firewall, battery cable rear	1	
	22105-07	B	SEAL - Firewall, battery cable rear	1	
-22	450 726	VYZ	DETECTOR - Lift	1	
-23	453 652	XY	BULB - Carburetor air temperature (50B2)	1	24-1477 and up
-24	22105-03	A	GASKET - Firewall seal	1	
-25	22103-02	L	PLATE - Firewall seal	2	
	22104-06	L	GROMMET - Firewall seal	2	
	22105-07	L	GASKET - Firewall seal	1	
-26	22106-00	K	GASKET - Firewall seal	1	
	26797-00	V	GASKET - Firewall seal	1	24-4783, 24-4804 and up
-27	22104-06	A	GROMMET - Firewall seal	2	
-28	587 865	V	SWITCH ASSEMBLY - Electric trim (#800452-03)	1	24-4783, 24-4804 and up

A - Used on PA-24-180 and PA-24-250 with serial numbers 24-2202 to 24-2843 inclusive.

B - Used on PA-24-260 with serial numbers 24-3642, 24-4000 to 24-4782, 24-4784 to 24-4803 inclusive, and PA-24-400 with serial numbers 26-2 and up.

C - Used on airplanes with serial numbers 24-2175, 24-2299 to 24-3284 inclusive.

D - Used on airplanes with serial numbers 24-2202 to 24-2843 inclusive.

E - If matching switch and locks are desired, order Kit Part No. 470 655.

F - If matching switch and locks are desired, order Kit Part No. 487 801.

G - If matching switch and locks are desired, order Kit Part No. 25163-06.

H - Used on PA-24-250 with serial numbers 24-2844 and up, PA-24-180 with serial numbers 24-3285 and up, and PA-24-400 and PA-24-260.

J - Used on airplanes with serial numbers 24-1 to 24-2174 inclusive, 24-2176 to 24-2298 inclusive.

K - Used on PA-24-180 and PA-24-250 with serial numbers 24-1 and up, PA-24-260 with serial numbers 24-3642, 24-4000 to 24-4782, 24-4784 to 24-4803 inclusive, and PA-24-400 with serial numbers 26-2 and up.

L - Used on PA-24-180 and PA-24-250 with serial numbers 24-2202 to 24-2843 inclusive, and PA-24-260 with serial numbers 24-4783, 24-4804 and up.

V - Used on PA-24-260 airplanes only.

X - Used on PA-24-180 airplanes only.

Y - Used on PA-24-250 airplanes only.

Z - Used on PA-24-400 airplanes only.

Figure and Index Number	Part Number	Code	NOMENCLATURE	No. Req.	SERIAL NUMBERS AFFECTED
32-29	492 643	Y	VIBRATOR - Starting (10-87998-1)	1	24-2202 and up
	492 643	VX	VIBRATOR - Starting (10-87998-1)	1	24-2299 to 24-4782 inclusive
	492 671	Z	VIBRATOR - Starting (10-377090-1)	1	
	492 674	V	VIBRATOR - Starting (#10-176487-121)	1	24-4783 and up
-30	22103-02	F	PLATE - Firewall seal grommet	6	
	22104-08	F	GROMMET - Firewall seal	2	
-31	22103-02	V	PLATE - Firewall seal grommet	4	24-4783, 24-4804 and up
	22104-07	V	GROMMET - Firewall seal	4	24-4783, 24-4804 and up
	22105-02	V	GASKET - Firewall seal	2	24-4783, 24-4804 and up
-32	470 656	E	KIT ASSEMBLY - Magneto ground	2	
	470 669	Z	KIT ASSEMBLY - Magneto ground	2	
-33	470 657	E	KIT ASSEMBLY - Magneto retard	1	
	470 670	Z	KIT ASSEMBLY - Magneto retard	1	
-34	481 054	D	PLACARD - Ignition switch	1	
-35	455 216	F	PLUG - Fuselage harness (#MS3106E24-28P)	1	
		V	PLUG - Fuselage harness (#MS3106E20-27P)	1	24-4783, 24-4804 and up
-36	455 215	F	RECEPTACLE - Fuselage harness (#MS3100E24-28S)	1	
		V	RECEPTACLE - Fuselage harness (#MS3100E20-27S)	1	24-4783, 24-4804 and up
-37	454 986	XY	CLAMP - Fuselage harness (#10-7924-28)	2	
-38	462 018	ABX	GASKET - Cylinder head temperature gauge (AC-1556847)	1	
	462 018	AVY	GASKET - Cylinder head temperature gauge (AC-1556847)	1	
	462 018	Z	GASKET - Cylinder head temperature gauge (AC-1556847)	1	
-39	462 044	ABX	ENGINE UNIT - Cylinder head temperature gauge (AC-1514340)	1	
	462 044	AVY	ENGINE UNIT - Cylinder head temperature gauge (AC-1514340)	1	
	462 044	Z	ENGINE UNIT - Cylinder head temperature gauge (AC-1514340)	1	
-40	450 786	ABX	GAUGE - Cylinder head temperature (AC-TG-6400225)	1	
-41	22953-00	XY	HARNESS ASSEMBLY - Carburetor air temperature	1	
-42	22951-00	XY	HARNESS ASSEMBLY - Carburetor air temperature	1	
-43	476 674	XY	NIPPLE - Electrical terminal	2	
	23969-04	C	NIPPLE - Electrical terminal	2	
-44	476 673	XY	NIPPLE - Electrical terminal	1	
	23969-02	C	NIPPLE - Electrical terminal	1	
-45	31494-00	VZ	FILTER ASSEMBLY - Alternator	1	

A - Optional equipment.
B - Ascertain that part being replaced is manufactured by AC Spark Plug as marked. If complete installation is desired, secure Kit 754 469.
C - Used on PA-24-260 with serial numbers 24-3642, 24-4000 to 24-4782, 24-4784 to 24-4803 inclusive, and PA-24-400 with serial numbers 26-2 and up.
D - Used on switch assembly 756 115.
E - Used on PA-24-180, PA-24-250 and PA-24-260 with serial numbers 24-2202 and up.
F - Used on PA-24-180 and PA-24-250 with serial numbers 24-1 and up, PA-24-260 with serial numbers 24-3642, 24-4000 to 24-4782, 24-4784 to 24-4803 inclusive, and PA-24-400 with serial numbers 26-2 and up.
V - Used on PA-24-260 airplanes only.
X - Used on PA 24-180 airplanes only.
Y - Used on PA-24-250 airplanes only.
Z - Used on PA-24-400 airplanes only.

Figure and Index Number	Part Number	Code	NOMENCLATURE	No. Req.	SERIAL NUMBERS AFFECTED
32-46	31893-02	YZ	CORD AND SWITCH ASSEMBLY - Electric trim	1	26-2 and up, 24-3642, 24-4000 to 24-4687 inclusive
	25839-00	V	CORD AND SWITCH ASSEMBLY - Electric trim (with map light)	1	24-4688 to 24-4782 inclusive, 24-4784 to 24-4803 inclusive
-47	472 770		LIGHT ASSEMBLY - Map (#15-0100-2)	1	
-48	487 859	C	SWITCH - (#8868K2)	1	
-49	24641-00	C	HOOD ASSEMBLY - Connector	1	
-50	451 929	AZ	ADAPTER - (AN3057-4)	1	
-51	455 292	AZ	CONNECTOR - (MS3106A-10SL-45)	1	
-52	187 069	Z	SLEEVE - Fire protection, alternator cable	30"	
-53	472 770	V	LIGHT ASSEMBLY - Map (#15-0100-2)	1	
-54	26806-00	V	SHELF ASSEMBLY - Relay mounting	1	24-4783, 24-4804 and up
-55	44180-00	V	FILTER ASSEMBLY - Regulator (460 614)	1	24-4783, 24-4804 and up
-56	550 383	V	REGULATOR - Voltage (#VSF7203)	1	24-4783, 24-4804 and up
-57	550 380	V	RELAY - Overvoltage (#X17621)	1	24-4783, 24-4804 and up
-58	487 149	V	SOLENOID - Starter (26898-02)	1	24-4783, 24-4804 and up
-59	25596-00	B	PLACARD - Trim switch	1	
	43360-00		PLACARD - Trim switch	1	24-4783, 24-4804 and up
-60	487 820	XYZ	SWITCH - Motor arm (8AS28)	1	
	25203-00	V	SWITCH - Motor arm	1	
-61	26934-00	V	CORD ASSEMBLY - Electric trim (without map light)	1	
-62	450 390	XY	REGULATOR - Voltage, Lycoming #62883, Delco-Remy #1118704 (used with 35 AMP generator)	1	
	450 384	XY	REGULATOR - Voltage, Lycoming #71745, Delco-Remy #1119224 (used with 50 AMP generator)	1	
-63	19807-00	VYZ	PLATE - Lift detector mounting	1	
-64	596 159	D	FILTER - Magneto (PT-AK006)	1	

A - Used when Kit 756 922 has been installed.
B - Used on PA-24-260 with serial numbers 24-3642, 24-4000 to 24-4782 inclusive, 24-4784 to 24-4803 inclusive, and PA-24-400 with serial numbers 26-2 and up.
C - Used on PA-24-180 and PA-24-250 with serial numbers 24-1 and up, PA-24-260 with serial numbers 24-3642, 24-4000 to 24-4782 inclusive, 24-4784 to 24-4803 inclusive, and PA-24-400 with serial numbers 26-2 and up.
D - Used if RaJay Turbocharger is installed.
V - Used on PA-24-260 airplanes only.
X - Used on PA-24-180 airplanes only.
Y - Used on PA-24-250 airplanes only.
Z - Used on PA-24-400 airplanes only.

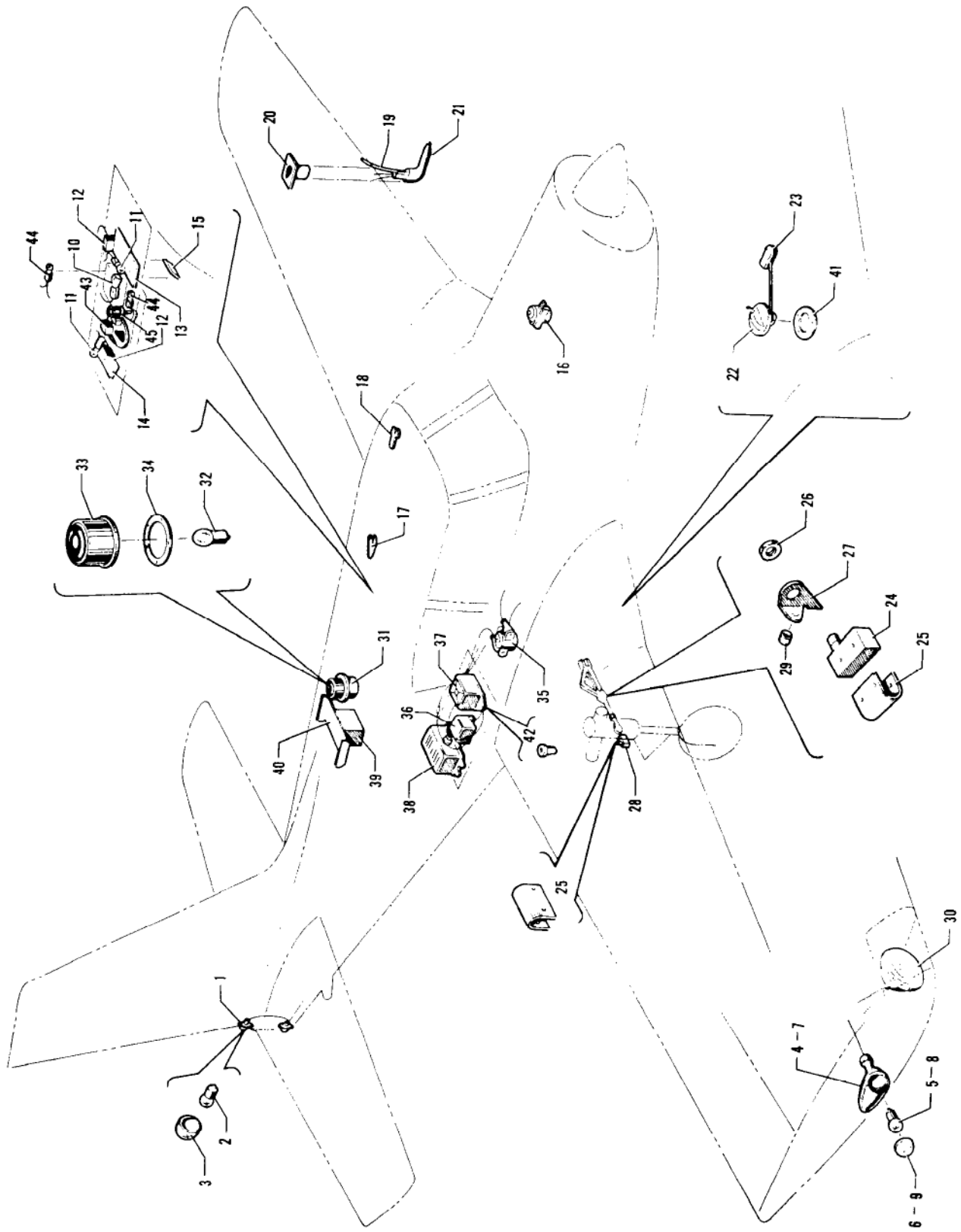

Figure 32A. Aft Electrical System Installation

Figure and Index Number	Part Number	Code	NOMENCLATURE	No. Req.	SERIAL NUMBERS AFFECTED
32-46	31893-02	YZ	CORD AND SWITCH ASSEMBLY - Electric trim	1	26-2 and up, 24-3642, 24-4000 to 24-4687 inclusive
	25839-00	V	CORD AND SWITCH ASSEMBLY - Electric trim (with map light)	1	24-4688 to 24-4782 inclusive, 24-4784 to 24-4803 inclusive
-47	472 770		LIGHT ASSEMBLY - Map (#15-0100-2)	1	
-48	487 859	C	SWITCH - (#8868K2)	1	
-49	24641-00	C	HOOD ASSEMBLY - Connector	1	
-50	451 929	AZ	ADAPTER - (AN3057-4)	1	
-51	455 292	AZ	CONNECTOR - (MS3106A-10SL-45)	1	
-52	187 069	Z	SLEEVE - Fire protection, alternator cable	30"	
-53	472 770	V	LIGHT ASSEMBLY - Map (#15-0100-2)	1	
-54	26806-00	V	SHELF ASSEMBLY - Relay mounting	1	24-4783, 24-4804 and up
-55	44180-00	V	FILTER ASSEMBLY - Regulator (4e0 614)	1	24-4783, 24-4804 and up
-56	550 383	V	REGULATOR - Voltage (=VSF7203)	1	24-4783, 24-4804 and up
-57	550 380	V	RELAY - Overvoltage (#X17621)	1	24-4783, 24-4804 and up
-58	487 149	V	SOLENOID - Starter (26898-02)	1	24-4783, 24-4804 and up
-59	25596-00	B	PLACARD - Trim switch	1	
	43360-00		PLACARD - Trim switch	1	24-4783, 24-4804 and up
-60	487 820	XYZ	SWITCH - Motor arm (8AS28)	1	
	25203-00	V	SWITCH - Motor arm	1	
-61	26934-00	V	CORD ASSEMBLY - Electric trim (without map light)	1	
-62	450 390	XY	REGULATOR - Voltage, Lycoming #62883, Delco-Remy #1118704 (used with 35 AMP generator)	1	
	450 384	XY	REGULATOR - Voltage, Lycoming #71745, Delco-Remy #1119224 (used with 50 AMP generator)	1	
-63	19807-00	VYZ	PLATE - Lift detector mounting	1	
-64	596 159	D	FILTER - Magneto (PT-AK006)	1	

A - Used when Kit 756 922 has been installed.
B - Used on PA-24-260 with serial numbers 24-3642, 24-4000 to 24-4782 inclusive, 24-4784 to 24-4803 inclusive, and PA-24-400 with serial numbers 26-2 and up.
C - Used on PA-24-180 and PA-24-250 with serial numbers 24-1 and up, PA-24-260 with serial numbers 24-3642, 24-4000 to 24-4782 inclusive, 24-4784 to 24-4803 inclusive, and PA-24-400 with serial numbers 26-2 and up.
D - Used if RaJay Turbocharger is installed.
V - Used on PA-24-260 airplanes only.
X - Used on PA-24-180 airplanes only.
Y - Used on PA-24-250 airplanes only.
Z - Used on PA-24-400 airplanes only.

PILOTEN-SERVICE
Straubing LBA II-A-170
Telefon (08421) 746

Figure and Index Number	Part Number	Code	NOMENCLATURE	No. Req.	SERIAL NUMBERS AFFECTED
32A-16	487 152		SOLENOID - Landing gear	1	
-17	20469-00	XY	PLATE - Wire attachment	1	24-1 to 24-2201 inclusive
-18	20468-00	XY	PLATE - Wire attachment	1	24-1 to 24-2201 inclusive
-19	83161-14	XYZ	HOSE - Flexible	1	
	83161-27	V	HOSE - Flexible	1	
-20	21299-00		MAST ASSEMBLY - Heated pitot	1	
-21	21301-00		TUBE ASSEMBLY - Pitot, heated	1	
-22	20966-00		GAUGE ASSEMBLY - Fuel tank	2	
-23	751 767		FLOAT - Fuel gauge	1	
-24	487 820	XYZ	SWITCH - Main gear (8AS28)	2	
	487 864	V	SWITCH - Main gear (1CH23-4)	2	
-25	17807-00	B	GUARD - Landing gear switch	5	
	17807-00	A	GUARD - Landing gear switch	3	
-26	404 820		NUT - Landing gear switch attachment (USAF-350-820) (4 used on "250")	3	
-27	21103-00	XYZ	BRACKET - Main gear switch mounting, left	1	
	21103-01	XYZ	BRACKET - Main gear switch mounting, right	1	
	24912-00	Y	BRACKET - Main gear switch mounting, left	1	
	24912-01	V	BRACKET - Main gear switch mounting, right	1	
-28	487 805	CXY	SWITCH - Left landing gear, safety	1	24-1 to 24-655 inclusive
	487 820	XYZ	SWITCH - Left landing gear, safety	1	24-656 and up, 26-2 and up
	487 864	V	SWITCH - Left landing gear, safety (1CH23-4)	1	
-29	14175-35	XYZ	BUSHING	2	
	14175-103	V	BUSHING	2	
-30	472 661		LIGHT - Landing (100 W)	2	
-31	452 402	E	BEACON ASSEMBLY - Rotating	1	
-32	752 307		BULB - Rotating (Grimes)	2	24-1 to 24-5026 inclusive, 26-2 and up
	751 448	E	BULB - Rotating beacon (Whelen)	1	
-33	754 527	E	DOME - WRM-10, Whelen Beacon	1	
-34	21523-00	E	GASKET - Rotating beacon	1	
-35	487 152	VYZ	SOLENOID - Flap	1	24-4644 and up, 26-2 and up
-36	24373-00	D	FILTER ASSEMBLY - Regulator	1	
-37	450 393	D	RELAY - Overvoltage, Lycoming #74661, Delco-Remy #1115831	1	
-38	450 392	D	REGULATOR - Voltage, Lycoming #74291, Delco-Remy #9000590	1	

A - Used on PA-24-180 and PA-24-250 with serial numbers 24-2175, 24-2299 and up, PA-24-400 and PA-24-260.
B - Used on PA-24-180 and PA-24-250 with serial numbers 24-1 to 24-2174, 24-2176 to 24-2298 inclusive.
C - Use switch, Part No. 487 820 if Kit 754 217 has been installed.
D - Used on PA-24-260 with serial numbers 24-3642, 24-4000 to 24-4782 inclusive, 24-4784 to 24-4803 inclusive, and PA-24-400 with serial numbers 26-2 and up.
E - See Figure 33D if Anti-Collision Strobe Light has been installed.
V - Used on PA-24-260 airplanes only.
X - Used on PA-24-180 airplanes only.
Y - Used on PA-24-250 airplanes only.
Z - Used on PA-24-400 airplanes only.

Figure and Index Number	Part Number	Code	NOMENCLATURE	No. Req.	SERIAL NUMBERS AFFECTED
32A-	21300	B	DRAWING - Heated Pitot Installation		
	26819	V	DRAWING - Heated Pitot Installation		24-4783, 24-4804 and up
	21526	C	DRAWING - Rotating Beacon Installation (Grimes)		
	22542	C	DRAWING - Rotating Beacon Installation (Whelen)		
	27057	DV	DRAWING - Rotating beacon Installation (Whelen)		24-5027 and up
	20852	X	DRAWING - Electrical Installation		24-1 to 24-102 inclusive
	21581	XY	DRAWING - Electrical Installation		24-103 to 24-2201 inclusive
	22149	X	DRAWING - Electrical Installation		24-2202 to 24-2298 inclusive
	22150	Y	DRAWING - Electrical Installation		24-2202 to 24-2298 inclusive
	22350	A	DRAWING - Electrical Installation		
	22800	Y	DRAWING - Electrical Installation		24-2844 and up
	23385	X	DRAWING - Electrical Installation		24-3285 and up
	24380	Z	DRAWING - Electrical Installation		
	24848	V	DRAWING - Electrical Installation		24-3642, 24-4000 to 24-4782 incl., 24-4784 to 24-4803 inclusive
	26827	V	DRAWING - Electrical Installation		24-4783, 24-4804 and up
-1	472 667	XY	LIGHT - White, tail	2	
	472 736	VZ	LIGHT - White, tail (#A2064-1073)	2	
-2	751 382	XY	BULB - (#93)	1	
	753 431	VZ	BULB - (#1073)	1	
-3	751 203		LENS - White	1	
-4	472 666		LIGHT - Green, right wing	1	
-5	751 381		BULB - (#1512)	1	
-6	751 201		LENS - Green	1	
-7	472 665		LIGHT - Red, left wing	1	
-8	751 381		BULB - (#1512)	1	
-9	751 202		LENS - Red	1	
-10	472 038		BULB - (#93)	1	
-11	472 036	B	BULB - (#89)	2	
	472 038		BULB - (#93)	2	24-4783, 24-4804 and up
-12	487 777	VXY	SWITCH - Toggle, cockpit lights (#5518)	2	
	487 777	VZ	SWITCH - Toggle, cockpit lights (#5518)	4	
-13	20635-02		PLATE - Plexiglas	1	
-14	20635-03		PLATE - Plexiglas	1	
-15	20635-04	B	PLATE - Plexiglas	1	
	20635-05		PLATE - Plexiglas	1	24-4783, 24-4804 and up

A - Used on PA-24-180 with serial numbers 24-2299 to 24-3284 inclusive, and PA-24-250 with serial numbers 24-2299 to 24-2843 inclusive.
B - Used on PA-24-180 and PA-24-250 with serial numbers 24-1 and up, PA-24-260 with serial numbers 24-3642, 24-4000 to 24-4782, 24-4784 to 24-4803 inclusive, and PA-24-400 with serial numbers 26-2 and up.
C - Used on PA-24-180 and PA-24-250 with serial numbers 24-1 and up, PA-24-260 with serial numbers 24-3642, 24-4000 to 24-5026 inclusive, and PA-24-400 with serial numbers 26-2 and up.
D - See Figure 33D if Anti-Collision Strobe Light has been installed.
V - Used on PA-24-260 airplanes only.
X - Used on PA-24-180 airplanes only.
Y - Used on PA-24-250 airplanes only.
Z - Used on PA-24-400 airplanes only.

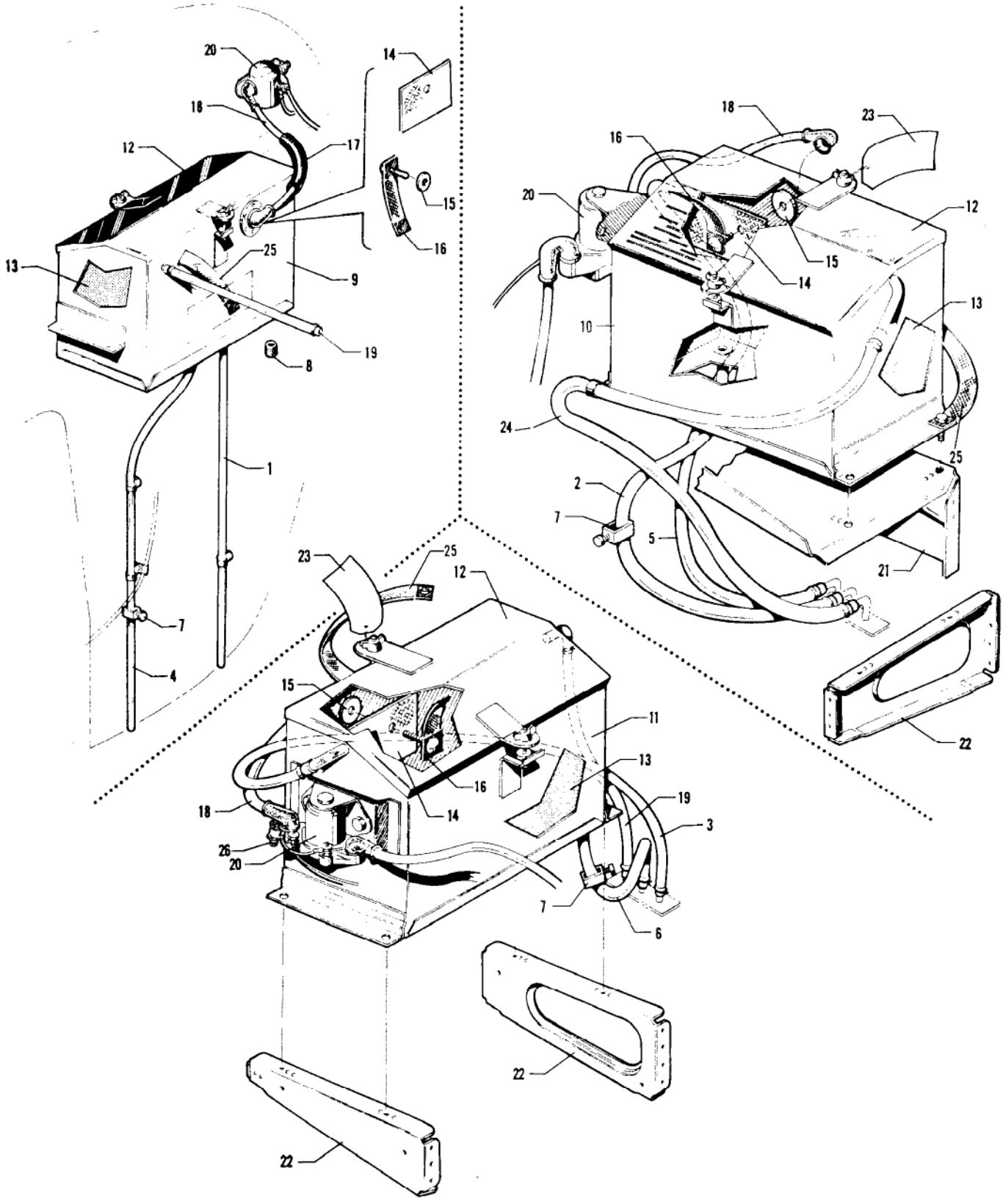

Figure 32B. Battery Box Installation

Figure and Index Number	Part Number	Code	NOMENCLATURE	No. Req.	SERIAL NUMBERS AFFECTED
32A-39	24704-00	AZ	SERVO ASSEMBLY - Electric trim (complete) (Piper)	1	
	24704-00	ACV	SERVO ASSEMBLY - Electric trim (complete) (Piper)	1	
	27129-02	ACV	SERVO ASSEMBLY - Electric trim (complete) (Mitchell)	1	
-40	24624-00	B	BRACKET ASSEMBLY - Servo mounting	1	
	26647-00	V	BRACKET ASSEMBLY - Servo mounting	1	24-4783, 24-4804 and up
-41	13002-00		GASKET - Fuel tank gauge	2	
-42	477 695	B	NUT - Shock mount	2	
-43	21879-00		SPEAKER ASSEMBLY	1	
-44	472 026		BULB - (#90)	2	24-1 to 24-4934, 26-2 and up
-45	484 575		RHEOSTAT - (#36232)	1	24-4783, 24-4804 and up

A - See Figure 45 or 46 if AltiMatic is installed.
B - Used on PA-24-260 with serial numbers 24-3642, 24-4000 to 24-4782 inclusive, 24-4784 to 24-4803 inclusive, and PA-24-400 with serial numbers 26-2 and up.
C - Ascertain existing servo manufacturer, either Piper or Mitchell, and order accordingly.
V - Used on PA-24-260 airplanes only.
Z - Used on PA-24-400 airplanes only.

Figure and Index Number	Part Number	Code	NOMENCLATURE	No. Req.	SERIAL NUMBERS AFFECTED
32B-	20852	X	DRAWING - Electrical System Installation		24-1 to 24-102 inclusive
	21585	B	DRAWING - Battery Box Installation		
	22346	C	DRAWING - Battery Box Installation		
	23216	Y	DRAWING - Battery Box Installation		24-2844 to 24-3284 inclusive
	23216	Z	DRAWING - Battery Box Installation		
	23216	V	DRAWING - Battery Box Installation		
-1	13586-47	X	TUBE - Plastic, battery box outlet vent	1	24-1 to 24-102 inclusive
-2	13586-53	D	TUBE - Plastic, battery box outlet vent	1	
-3	22369-04	E	TUBE - Plastic, battery box outlet vent	1	
-4	13586-46	X	TUBE - Plastic, battery box drain	1	24-1 to 24-102 inclusive
-5	13586-54	D	TUBE - Plastic, battery box drain	1	
-6	22369-02	E	TUBE - Plastic, battery box drain	1	
-7	454 925		CLAMP - (#18-852)	1	
-8	83302-36	X	SPRING - Coil	1	24-1 to 24-102 inclusive
-9	20659-00	X	BOX ASSEMBLY - Battery	1	24-1 to 24-102 inclusive
-10	21524-00	D	BOX ASSEMBLY - Battery	1	
-11	21524-02	E	BOX ASSEMBLY - Battery	1	
-12	17566-02		LID ASSEMBLY - Battery box	1	
-13	450 035		BATTERY - (R-35) 14 Volt	1	
-14	17555-00		PLATE - Battery box insulator	1	
-15	81342-56		WASHER - Battery terminal	1	
-16	14069-00		TERMINAL ASSEMBLY - Battery box	1	
-17	14086-02	X	HOSE - Flexible	1	24-1 to 24-102 inclusive
-18	14226-17	X	WIRE ASSEMBLY - (Battery to master solenoid)	1	24-1 to 24-102 inclusive
	14226-19	DE	WIRE ASSEMBLY - (Battery to master solenoid)	1	
-19	13586-48	B	TUBE - Plastic	1	
	22369-03	F	TUBE - Plastic	1	
-20	455 342		SOLENOID - Master (#6041H246)	1	
-21	21542-00	XY	BRACKET ASSEMBLY - Battery box support	1	

A - Used on PA-24-260 with serial numbers 24-3642, 24-4000 to 24-4246, 24-4248 to 24-4299 inclusive, and all PA-24-180, PA-24-250 and PA-24-400 airplanes.
B - Used on PA-24-180 and PA-24-250 with serial numbers 24-1 to 24-2174, 24-2176 to 24-2298 inclusive.
C - Used on PA-24-180 with serial numbers 24-2299 and up, and PA-24-250 with serial numbers 24-2299 to 24-2843, 24-3285 and up.
D - Used on PA-24-180 and PA-24-250 with serial numbers 24-103 to 24-2174, 24-2176 to 24-2298 inclusive.
E - Used on PA-24-180 and PA-24-250 with serial numbers 24-2175, 24-2299 and up, PA-24-400 and PA-24-260 with serial numbers 24-3642, 24-4000 to 24-4246 inclusive, 24-4248 to 24-4299 inclusive.
F - Used on PA-24-180 and PA-24-250 with serial numbers 24-2175, 24-2299 and up, PA-24-400 and PA-24-260.
V - Used on PA-24-260 airplanes only.
X - Used on PA-24-180 airplanes only.
Y - Used on PA-24-250 airplanes only.
Z - Used on PA-24-400 airplanes only.

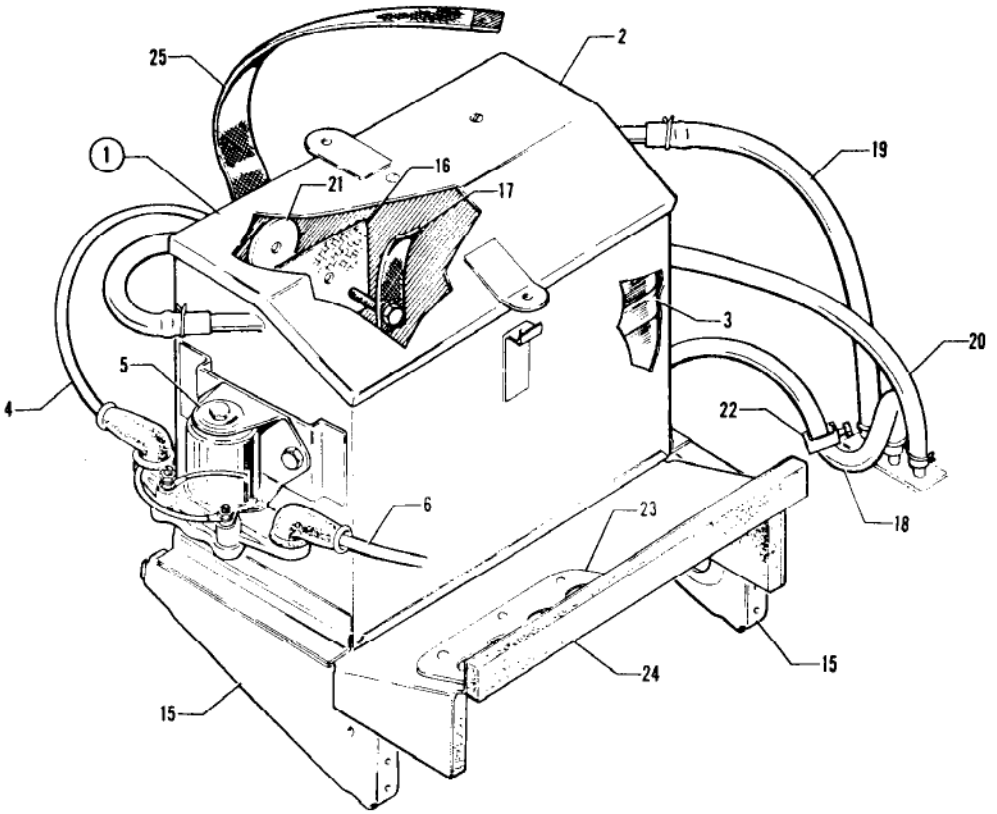

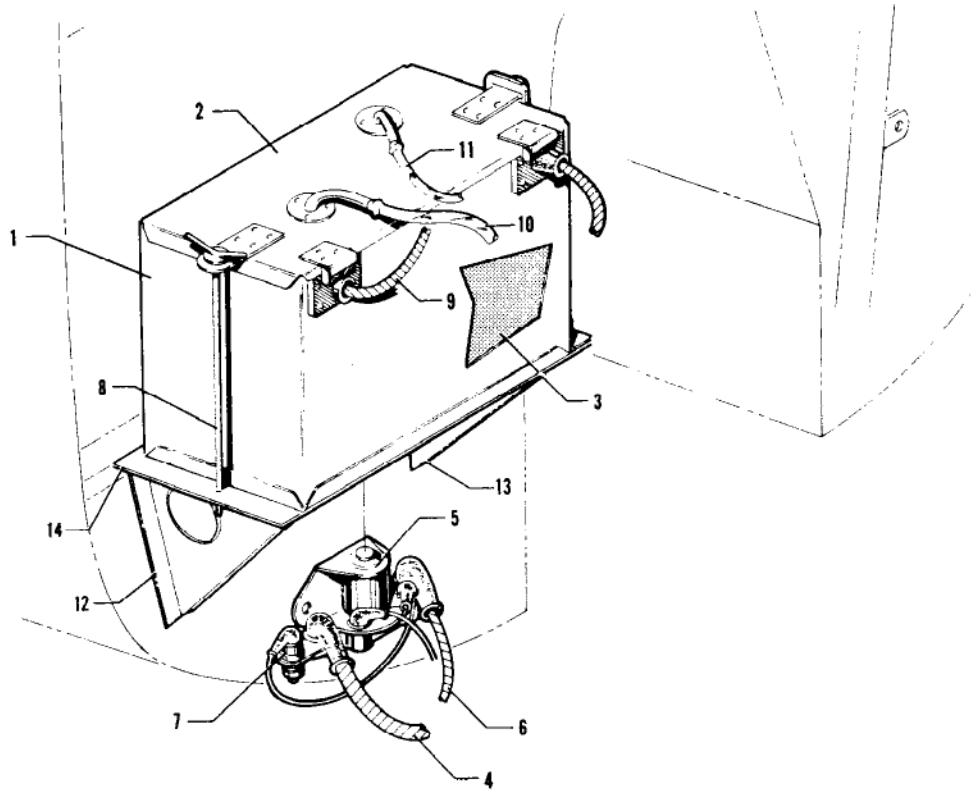

Figure 32C. Battery Box Installation
(Serial Nos. 24-4247, 24-4300 and up)

Figure and Index Number	Part Number	Code	NOMENCLATURE	No. Req.	SERIAL NUMBERS AFFECTED
32B-22	22189-00	B	BRACKET ASSEMBLY - Battery box support, inboard	1	
	22190-00	B	BRACKET ASSEMBLY - Battery box support, outboard	1	
-23	14072-00		TAG	1	
-24	13586-52	XY	TUBE - Plastic, battery box vent	1	
-25	17735-00		CABLE ASSEMBLY - Ground	1	
-26	456 704		DIODE - (#1N1183) Master solenoid	1	

A - Used on PA-24-260 with serial numbers 24-3642, 24-4000 to 24-4246 inclusive, 24-4248 to 24-4299 inclusive, and all PA-24-180, PA-24-250 and PA-24-400 airplanes.
B - Used on PA-24-180 and PA-24-250 with serial numbers 24-2299 and up, PA-24-260 with serial numbers 24-3642, 24-4000 to 24-4246, 24-4248 to 24-4299 inclusive, and PA-24-400 with serial numbers 26-2 and up.
X - Used on PA-24-180 airplanes only.
Y - Used on PA-24-250 airplanes only.

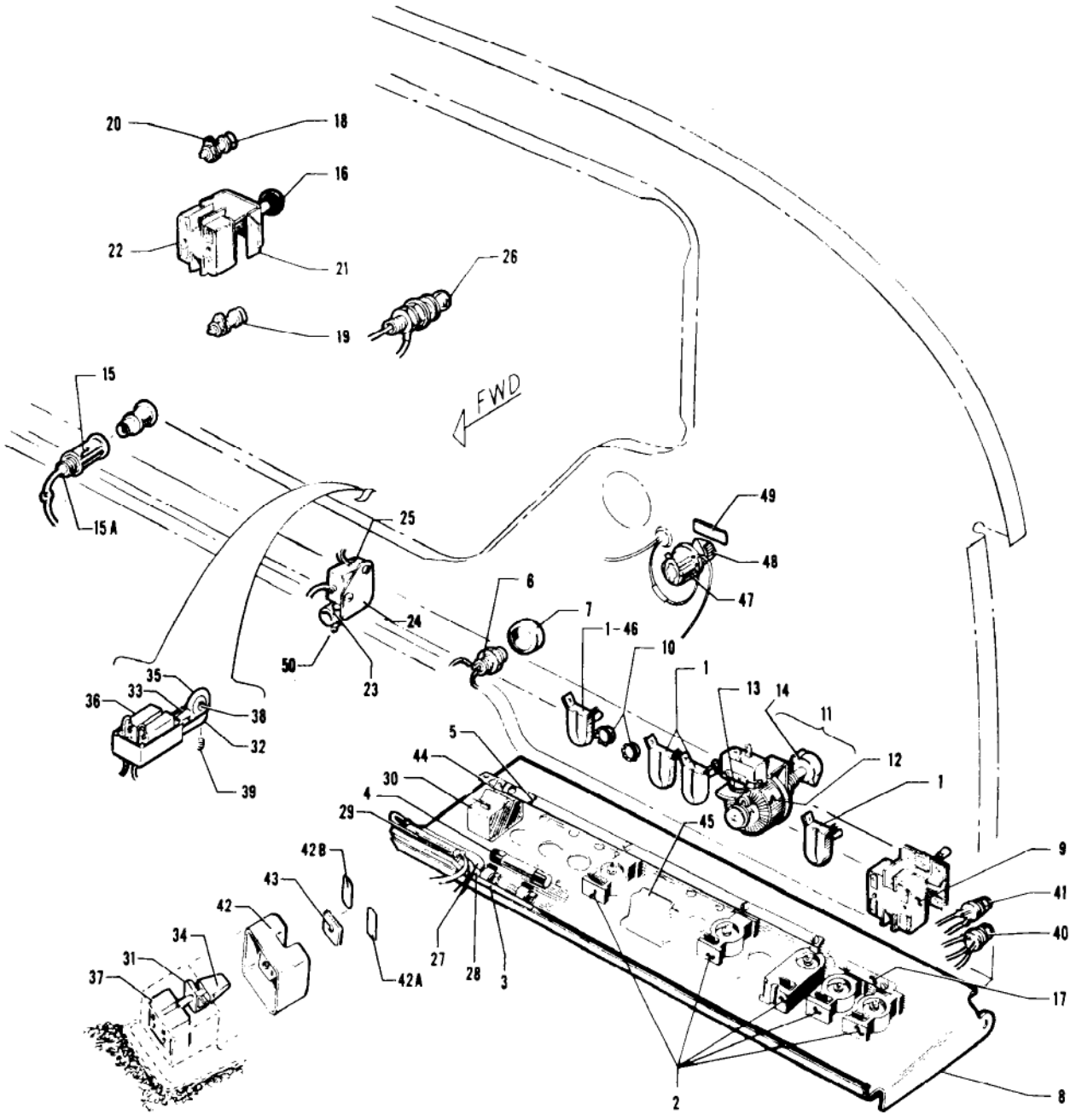

Figure 33. Cockpit Electrical Installation

Figure and Index Number	Part Number	Code	NOMENCLATURE	No. Req.	SERIAL NUMBERS AFFECTED
32C-	25400	A	DRAWING - Electrical System Engine Compartment		
	26937		DRAWING - Battery Box Installation		
-1	25338-00	A	BOX ASSEMBLY - Battery	1	
	26240-00		BOX ASSEMBLY - Battery	1	24-4783, 24-4804 and up
-2	25325-00	A	LID ASSEMBLY - Battery box	1	
	17566-02		LID ASSEMBLY - Battery box	1	24-4783, 24-4804 and up
-3	450 035		BATTERY - (R-35) 14 Volt	1	
-4	14226-40	A	WIRE ASSEMBLY - Battery to master solenoid	1	
	14226-19		WIRE ASSEMBLY - Battery to master solenoid	1	24-4783, 24-4804 and up
-5	455 342		SOLENOID - Master (#6041H246)	1	
-6	14226-37	A	WIRE ASSEMBLY - Master solenoid to starter solenoid	1	
	14226-46		WIRE ASSEMBLY - Master solenoid to starter solenoid	1	24-4783, 24-4804 and up
-7	456 704	A	DIODE - (#1N1183) Master solenoid	1	
-8	25329-00	A	ROD ASSEMBLY - Battery retainer	1	
-9	14226-41	A	CABLE ASSEMBLY - Negative battery terminal ground	1	
-10	19790-16	A	TUBE - Plastic, battery box vent	1	
-11	19790-18	A	TUBE - Plastic, battery box vent	1	
-12	25312-00	A	BRACKET ASSEMBLY - Battery box mounting	1	
-13	25305-00	A	BRACKET ASSEMBLY - Battery box mounting	1	
-14	25562-00	A	PLATE - Battery box support	1	
-15	22189-00		BRACKET ASSEMBLY - Battery box support, inboard	1	24-4783, 24-4804 and up
	22190-00		BRACKET ASSEMBLY - Battery box support, outboard	1	24-4783, 24-4804 and up
-16	17555-00		PLATE - Battery box insulator	1	24-4783, 24-4804 and up
-17	14069-00		TERMINAL ASSEMBLY - Battery box	1	24-4783, 24-4804 and up
-18	22369-03		TUBE - Plastic, battery box drain	1	24-4783, 24-4804 and up
-19	80006-03		TUBE - Plastic, battery box vent	1	24-4783, 24-4804 and up
-20	80006-02		TUBE - Plastic, battery box vent	1	24-4783, 24-4804 and up
-21	81342-56		WASHER - Battery terminal	1	24-4783, 24-4804 and up
-22	454 925		CLAMP - (#18-882)	1	24-4783, 24-4804 and up
-23	25442-00		PLATE ASSEMBLY - Cable guide	1	24-4783, 24-4804 and up
-24	26135-00		COVER ASSEMBLY - Cabin exhaust duct	1	24-4783, 24-4804 and up
-25	17604-14		CABLE ASSEMBLY - Ground	1	24-4783, 24-4804 and up

A - Used on PA-24-260 with serial numbers 24-4247, 24-4300 to 24-4782, 24-4784 to 24-4803 inclusive.

When ordering, always specify Part Number, Description and Serial Number of Aircraft

Figure and Index Number	Part Number	Code	NOMENCLATURE	No. Req.	SERIAL NUMBERS AFFECTED
33-	21203	X	DRAWING - Fuselage Harness Installation		24-1 to 24-102 inclusive
	21584	XY	DRAWING - Fuselage Harness Installation		24-103 to 24-2298 inclusive
	22220	X	DRAWING - Fuselage Harness Installation		24-2299 to 24-3284 inclusive
	22220	Y	DRAWING - Fuselage Harness Installation		24-2299 to 24-2843 inclusive
	22750	Y	DRAWING - Fuselage Harness Installation		24-2844 to 24-3284 inclusive
	23382	X	DRAWING - Fuselage Harness Installation		24-3285 and up
	23386	Y	DRAWING - Fuselage Harness Installation		24-3285 and up
	24370	Z	DRAWING - Fuselage Harness Installation		
	24837	V	DRAWING - Fuselage Harness Installation		24-3642, 24-4000 to 24-4472 incl.
	25649	V	DRAWING - Fuselage Harness Installation		24-4473 to 24-4609 inclusive
	25745	V	DRAWING - Fuselage Harness Installation		24-4610 and up
	20855	X	DRAWING - Wiring Diagram		24-1 to 24-102 inclusive
	21551	XY	DRAWING - Wiring Diagram		24-103 to 24-655 inclusive
	21840	XY	DRAWING - Wiring Diagram		24-656 to 24-2201 inclusive
	22127	X	DRAWING - Wiring Diagram		24-2202 to 24-2298 inclusive
	22128	Y	DRAWING - Wiring Diagram		24-2202 to 24-2298 inclusive
	22347	XY	DRAWING - Wiring Diagram		24-2299 to 24-2843 inclusive
	22759	X	DRAWING - Wiring Diagram		24-2844 and up
	22698	Y	DRAWING - Wiring Diagram		24-2844 and up
	24372	Z	DRAWING - Wiring Diagram		
	24847	V	DRAWING - Wiring Diagram		24-3642, 24-4000 to 24-4472 incl.
	25650	V	DRAWING - Wiring Diagram		24-4473 to 24-4609 inclusive
	25744	V	DRAWING - Wiring Diagram		24-4610 and up
	25863	V	DRAWING - Map Light Installation		24-4688 and up
-1	487 790	B	SWITCH - Toggle (110-S-75) (heated pitot, turn and bank, landing light, fuel pump, rotating beacon)	6	24-1 to 24-2843 inclusive
	487 828	C	SWITCH - (#8801K13) (heated pitot, landing light, fuel pump)	4	
	487 860	V	SWITCH - (#2FA54-73) (heated pitot, landing light, fuel pump)	4	

A - Used on PA-24-180 and PA-24-250 with serial numbers 24-1 and up, PA-24-260 with serial numbers 24-3642, 24-4000 to 24-4782 inclusive, 24-4784 to 24-4803 inclusive, and PA-24-400 with serial numbers 26-2 and up.
B - Used on PA-24-180 with serial numbers 24-2175, 24-2299 to 24-3284 inclusive, and PA-24-250 with serial numbers 24-2299 to 24-2843 inclusive.
C - Used on PA-24-180 with serial numbers 24-3285 and up, and PA-24-250 with serial numbers 24-2844 and up.
V - Used on PA-24-260 airplanes only.
X - Used on PA-24-180 airplanes only.
Y - Used on PA-24-250 airplanes only.
Z - Used on PA-24-400 airplanes only.

Figure and Index Number	Part Number	Code	NOMENCLATURE	No. Req.	SERIAL NUMBERS AFFECTED
33-11	21248-00	B	RHEOSTAT ASSEMBLY	1	
	22858-00	C	RHEOSTAT ASSEMBLY	1	
	22858-04	V	RHEOSTAT ASSEMBLY	1	24-4371 to 24-4472 inclusive
	22858-07	V	RHEOSTAT ASSEMBLY	1	24-4473 and up
-12	18492-02	B	RHEOSTAT ASSEMBLY	1	
	484 582	C	RHEOSTAT ASSEMBLY	1	
	484 583	V	RHEOSTAT ASSEMBLY	1	24-4371 and up
-13	484 398	BC	RESISTOR - Rheostat	1	
	484 424	V	RESISTOR - Rheostat	1	24-4371 and up
-14	471 068		KNOB - Rheostat (M-88-10-4)	1	
-15	472 653		LIGHTER ASSEMBLY - Cigarette	1	
-15a	751 529		CIRCUIT BREAKER - Cigarette lighter	1	
-16	18875-06	XY	KNOB - Landing gear retraction switch	1	24-1 to 24-655 inclusive
-17	10438-02	XY	JUMPER - Circuit breaker	1	24-1 to 24-3285 inclusive
-18	472 694		LIGHT - Gear indicator (less lens)	2	
	472 694	VYZ	LIGHT - Stall warning (less lens)	1	
19	472 332		LENS - Gear indicator light, amber	1	
	472 333		LENS - Gear indicator light, green	1	
-20	472 054		BULB - Gear indicator (#330 G. E.)	2	
	472 037	VYZ	BULB - Stall warning (#330)	1	
-21	21078-00	EXY	BRACKET - Gear retraction switch	1	24-1 to 24-827 inclusive
	21839-00	XY	BRACKET - Gear retraction switch	1	24-828 to 24-2843 inclusive
-22	21079-00	DXY	SWITCH ASSEMBLY - Retraction	1	24-1 to 24-827 inclusive
	487 845	Y	SWITCH ASSEMBLY - Retraction (4TL66-1L)	1	24-828 to 24-2843 inclusive
	487 845	X	SWITCH ASSEMBLY - Retraction (4TL66-1L)	1	24-828 and up
-23	451 841		ACTUATOR - Retraction switch (JV-5)	1	
-24	23358-00		BRACKET ASSEMBLY - Throttle limit switch	1	
-25	487 819		SWITCH - Throttle limit (AN3234-3)	1	
-26	472 334	VYZ	LENS - Stall warning light, red	1	
-27	460 901	VYZ	FLASHER - Stall warning	1	
-28	452 897	VYZ	BLOCK - Flasher	1	
-29	484 380	VYZ	RESISTOR - Stall warning light	1	
-30	454 656	VYZ	CIRCUIT PROTECTOR - (5 AMP Wood) Stall warning	1	
-31	23229-00	Y	BRACKET - Flap switch	1	24-2844 to 24-3641 inclusive

A - Used on PA-24-180 and PA-24-250 with serial numbers 24-1 and up, PA-24-260 with serial numbers 24-3642, 24-4000 to 24-4782, 24-4784 to 24-4803 inclusive, and PA-24-400 with serial numbers 26-2 and up.
B - Used on PA-24-180 with serial numbers 24-1 to 24-3284 inclusive and PA-24-250 with serial numbers 24-1 to 24-2843 inclusive.
C - Used on PA-24-180 with serial numbers 24-3285 and up, PA-24-250 with serial numbers 24-2844 and up, PA-24-400 and PA-24-260 with serial numbers 24-3642, 24-4000 to 24-4370 inclusive.
D - Use switch, Part No. 487 845, if Kit 754 217 or 754 221 is installed.
E - Use plate, Part No. 21839-00, if Kit 754 217 or 754 221 is installed.
V - Used on PA-24-260 airplanes only.
X - Used on PA-24-180 airplanes only.
Y - Used on PA-24-250 airplanes only.
Z - Used on PA-24-400 airplanes only.

Figure and Index Number	Part Number	Code	NOMENCLATURE	No. Req.	SERIAL NUMBERS AFFECTED
33-2	454 648	F	CIRCUIT PROTECTOR - (PSM5)	AR	
	454 656	B	CIRCUIT PROTECTOR - (5 AMP)	AR	
	454 657	B	CIRCUIT PROTECTOR - (10 AMP)	AR	
	454 658	B	CIRCUIT PROTECTOR - (15 AMP)	AR	
	454 659	B	CIRCUIT PROTECTOR - (20 AMP)	AR	
	454 661	B	CIRCUIT PROTECTOR - (30 AMP)	AR	
	454 654	F	CIRCUIT PROTECTOR - (PSM35)	2	
	454 662	BXY	CIRCUIT PROTECTOR - (50 AMP)	2	
	454 667	BVZ	CIRCUIT PROTECTOR - (90 AMP)	1	
-3	12156-02	XY	BLOCK ASSEMBLY - Fuse	1	24-1 to 24-3357 inclusive
-4	461 622		FUSE - (#3AG10)	1	
-5	20857-00	XY	BAR - Circuit breaker bus (9-5/16")	AR	
	20857-02	XY	BAR - Circuit breaker bus (10-13/16")	AR	
	22856-02	XY	BAR - Circuit breaker bus (1-1/16")	AR	
	22856-03	XY	BAR - Circuit breaker bus (1-13/16")	AR	
	22856-04	XY	BAR - Circuit breaker bus (2-9/16")	AR	
	31506-02	Z	BAR - Circuit breaker bus (1-1/4")	12	
	31506-02	V	BAR - Circuit breaker bus (1-1/4")	10	
	31506-03	VZ	BAR - Circuit breaker bus (2")	1	
	31506-04	V	BAR - Circuit breaker bus (2-3/4")	1	
-6	487 527	XY	SWITCH - Starter (1875-0)	1	24-1 to 24-2298 inclusive
-7	21064-00	XY	GUARD - Starter switch	1	24-1 to 24-2298 inclusive
-8	20544-00	FXY	PLATE - Circuit breaker mounting	1	
	21869-00	BXY	PLATE - Circuit breaker mounting	1	24-987 to 24-1952 inclusive
	22096-00	BC	PLATE - Circuit breaker mounting	1	
	22176-00	BD	PLATE - Circuit breaker mounting	1	
	22717-00	BE	PLATE - Circuit breaker mounting	1	
	24627-00	VZ	PLATE - Circuit breaker mounting	1	
-9	487 818		SWITCH - Master (8740K9)	1	
-10	17962-03	XY	BUTTON - Plug	3	24-1 to 24-2843 inclusive
	453 661		BUTTON - Plug (#BS51051)	3	24-2844 and up, 26-2 and up

A - Used on PA-24-180 and PA-24-250 with serial numbers 24-1 and up, PA-24-260 with serial numbers 24-3642, 24-4000 to 24-4782, 24-4784 to 24-4803 inclusive, and PA-24-400 with serial numbers 26-2 and up.
B - Used when Wood circuit protectors are installed.
C - Used on PA-24-180 and PA-24-250 with serial numbers 24-1953 to 24-2174, 24-2176 to 24-2298 inclusive.
D - Used on PA-24-180 with serial numbers 24-2175, 24-2299 to 24-3284 and PA-24-250 with serial numbers 24-2299 to 24-2843 inclusive.
E - Used on PA-24-180 with serial numbers 24-3285 and up, and PA-24-250 with serial numbers 24-2844 and up.
F - Used when Spencer circuit protectors are installed.
V - Used on PA-24-260 airplanes only.
X - Used on PA-24-180 airplanes only.
Y - Used on PA-24-250 airplanes only.
Z - Used on PA-24-400 airplanes only.

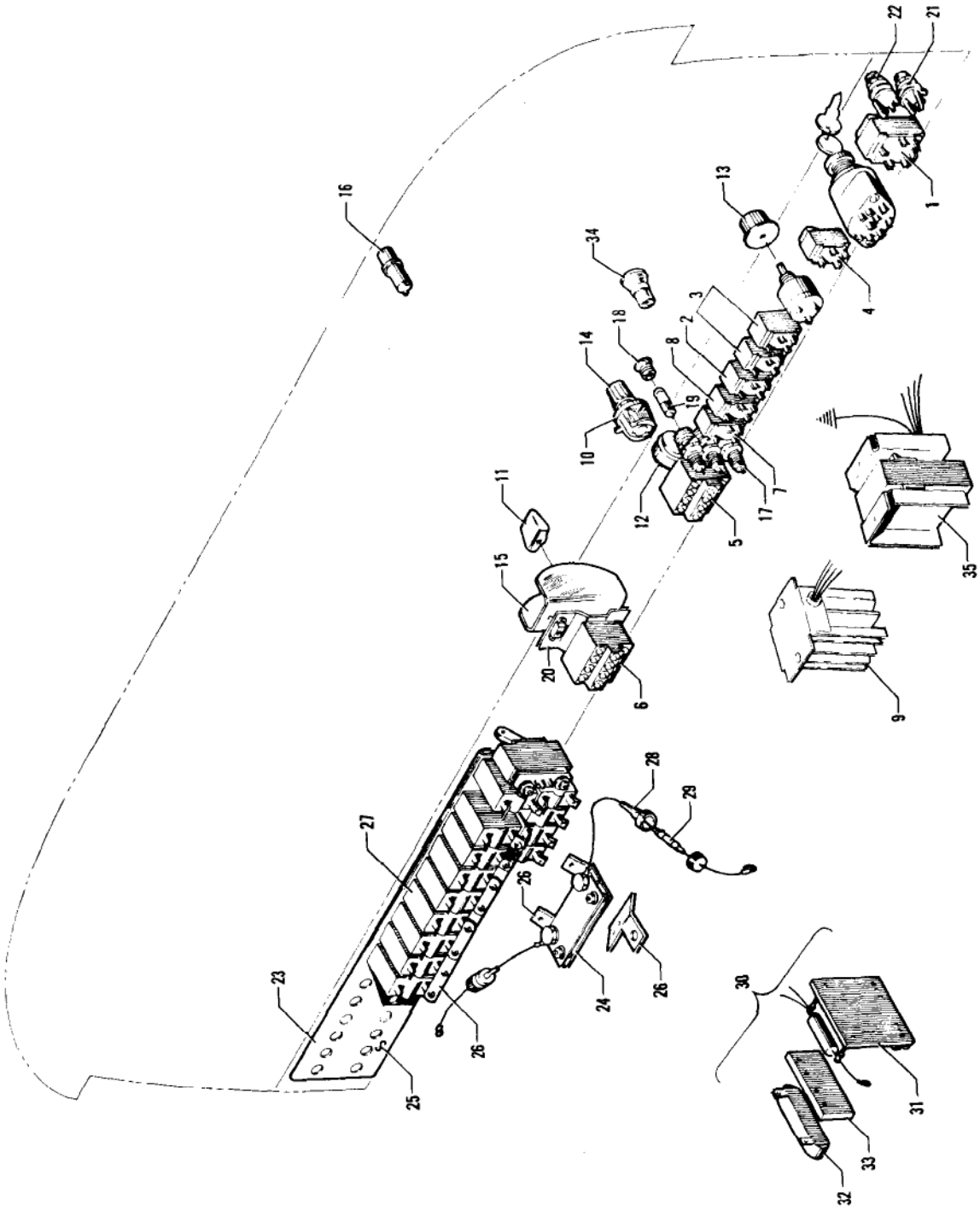

Figure 33A. Cockpit Electrical Installation
(Serial Nos. 24-4783, 24-4804 and up)

Figure and Index Number	Part Number	Code	NOMENCLATURE	No. Req.	SERIAL NUMBERS AFFECTED
33-32	23210-00	GY	GUARD ASSEMBLY	1	
	23210-02	E	GUARD ASSEMBLY	1	
-33	23050-00	GY	REDUCER	1	
-34	23049-00	Y	KNOB - Flap switch	1	24-2844 to 24-3641 inclusive
	23943-00	VYZ	KNOB - Flap switch	1	24-3642 and up, 26-2 and up
-35	23047-00	DY	KNOB - Landing gear (1-5/16" diameter)	1	24-2844 to 24-3284 inclusive
	23347-00		KNOB - Landing gear (1" diameter)	1	24-3285 and up, 26-2 and up
-36	487 845	VYZ	SWITCH - Landing gear retraction (4TL66-1L)	1	24-2844 to 24-4098, 26-2 and up
	487 865	V	SWITCH - Landing gear retraction (4TL66-3F)	1	24-4099 and up
-37	487 839	VYZ	SWITCH - Flap micro (4TL57-1)	1	24-2844 and up, 26-2 and up
-38	454 175	FY	CAP - Gear retraction switch (TL10128)	1	24-105 to 24-2843, 24-3285 and up
	454 175	VXZ	CAP - Gear retraction switch (TL10128)	1	24-1 and up, 26-2 and up
-39	419 965		SCREW - Set (#6-32 x 3/16")	1	
-40	468 002		JACK - Mike	1	24-3285 and up, 26-2 and up
-41	468 006		JACK - Phone	1	24-3285 and up, 26-2 and up
-42	24663-00	VYZ	GUARD - Flap switch	1	24-3642 and up, 26-2 and up
-42a	24961-00	VYZ	PLACARD - Wing flap	1	
-42b	24962-00	VYZ	PLACARD - Wing flap control	1	
-43	24664-00	VYZ	WASHER - Flap switch	1	24-3642 and up, 26-2 and up
-44	24647-00	VZ	BAR - Circuit breaker bus	1	
-45	25371-00	CV	PLATE - Circuit protector guard	1	
-46	487 860	BZ	SWITCH - (#2FA54-73) Fuel pump	1	
	487 871	CZ	SWITCH - (#6GM76-73) Fuel pump	1	
-47	25854-00	V	RHEOSTAT ASSEMBLY - Map light	1	
-48	571 098	V	KNOB - Map light rheostat (#1400)	1	
-49	25862-00	V	PLACARD - Map light (581 345)	1	
-50	419 978		SCREW - Set (#8-32 x 3/8)	2	

A - Used on PA-24-180 and PA-24-250 with serial numbers 24-1 and up, PA-24-260 with serial numbers 24-3642, 24-4000 to 24-4782 inclusive, 24-4784 to 24-4803 inclusive, and PA-24-400 with serial numbers 26-2 and up.
B - Used on PA-24-400 if Kit 756 922 has been installed per Service Letter #451.
C - Used if Kit 756 922 has not been installed per Service Letter #451.
D - If 1" diameter knob is installed, order 23347-00.
E - Used with 1" diameter landing gear knob.
F - Used on PA-24-250 with serial numbers 24-2844 to 24-3284 if 1" knob is installed.
G - Used with 1-5/16" diameter landing gear knob.
V - Used on PA-24-260 airplanes only.
X - Used on PA-24-180 airplanes only.
Y - Used on PA-24-250 airplanes only.
Z - Used on PA-24-400 airplanes only.

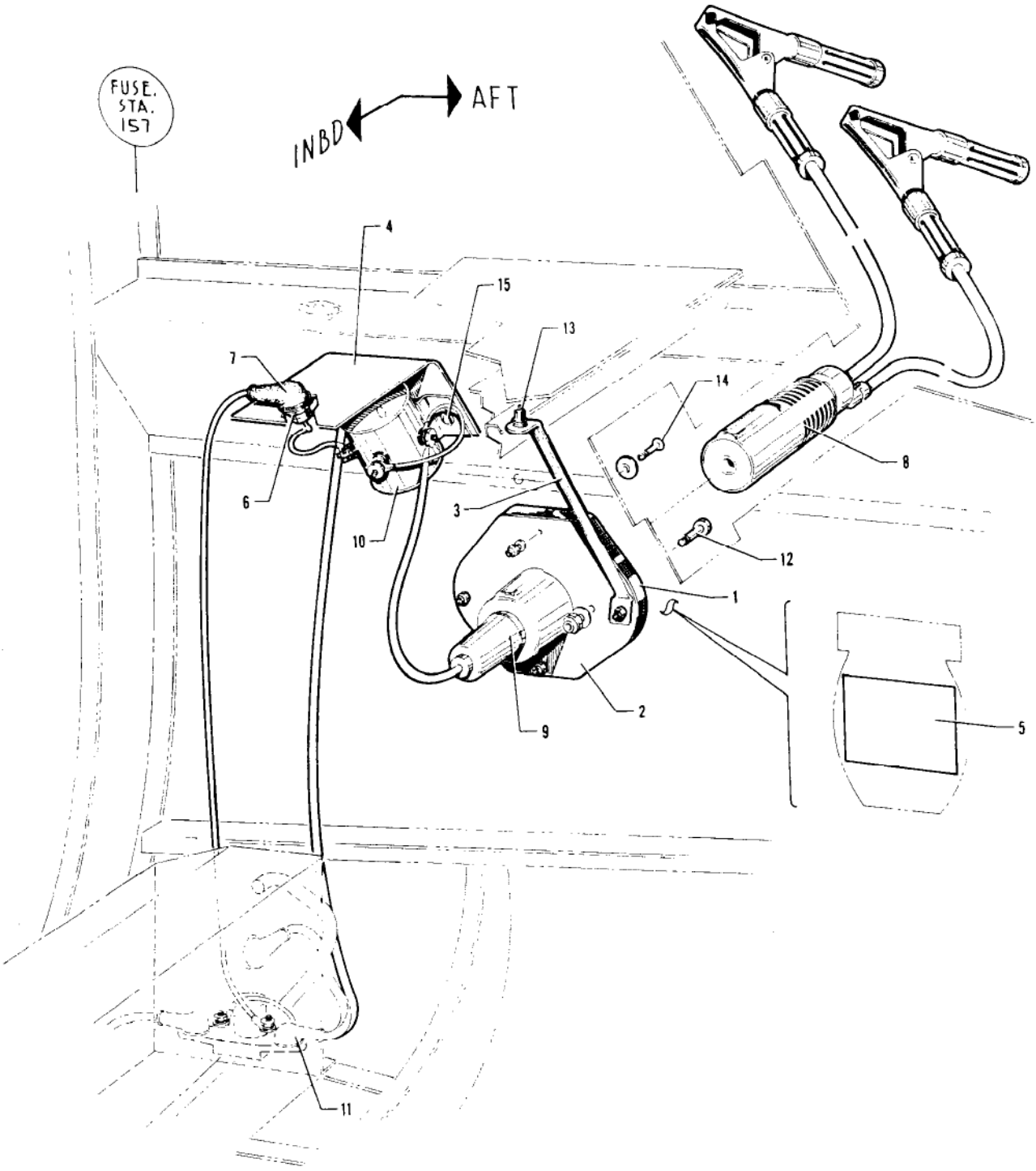

Figure 33B. External Power Supply

Figure and Index Number	Part Number	Code	NOMENCLATURE	No. Req.	SERIAL NUMBERS AFFECTED
33A-	26858		DRAWING - Fuselage Harness Installation		
-1	32370-02		SWITCH - Master	1	
-2	32370-04		SWITCH - Navigation lights	1	
-3	32370-05		SWITCH - Landing lights	2	
-4	32370-14		SWITCH - Fuel pump	1	
-5	487 865		SWITCH - Landing gear retraction (4TL66-3F)	1	
-6	487 839		SWITCH - Flap micro (4TL57-1)	1	
-7	32370-09		SWITCH - Heated pitot	1	24-4783, 24-4804 to 24-5026 incl.
	32370-16		SWITCH - Anti-collision, white (487 781)	1	24-5027 and up
-8	32370-03		SWITCH - Rotating beacon	1	24-4783, 24-4804 to 24-5026 incl.
	32370-15		SWITCH - Anti-collision, red (487 780)	1	24-5027 and up
-9	32370-09		SWITCH - Heated pitot	1	24-5027 and up
-10	25851-02		RHEOSTAT ASSEMBLY - Map light	1	
-11	23943-00		KNOB - Flap switch	1	
-12	23347-00		KNOB - Landing gear switch	1	
-13	571 112		KNOB - Instrument lights (#105D)	1	
-14	571 114		KNOB - Map light (#1-103D)	1	
-15	26356-00		GUARD - Flap switch	1	
-16	32424-00		LIGHT ASSEMBLY - Stall warning	1	
-17	472 694		LIGHT - Gear indicator (less lens)	3	
-18	472 332		LENS - Gear indicator light, amber	1	
	472 338		LENS - Gear indicator light, white	1	
	472 333		LENS - Gear indicator light, green	1	
-19	472 054		BULB - Gear indicator (PS10008-330)	4	
-20	26774-00		BRACKET ASSEMBLY - Flap switch	1	
-21	468 002		JACK - Mike (#S12B)	1	
-22	468 006		JACK - Phone (#11)	1	
-23	26795-00		PANEL ASSEMBLY - Circuit protector	1	
-24	23844-00		SHUNT ASSEMBLY	1	
-25	26386-00		PANEL - Circuit protector	1	
-26	16439-00		BAR - Bus (1-3/4")	1	
	31506-02		BAR - Bus (1-1/4")	5	
	31506-06		BAR - Bus (2")	1	
	25762-00		BAR - Bus, angled (1/2")	2	
	25763-00		BAR - Bus, angled, L. H. (1")	1	
	25763-01		BAR - Bus, angled, R. H. (1")	1	
	31506-05		BAR - Bus (3 1/2")	1	24-5027 and up
-27	454 656		CIRCUIT PROTECTOR - (#109-205-102) 5 AMP	7	
	454 657		CIRCUIT PROTECTOR - (#109-210-102) 10 AMP	1	
	454 658		CIRCUIT PROTECTOR - (#109-215-102) 15 AMP	1	
	454 659		CIRCUIT PROTECTOR - (#109-220-102) 20 AMP	1	
	454 661		CIRCUIT PROTECTOR - (#109-230-102) 30 AMP	1	
	454 712		CIRCUIT PROTECTOR - (#616-290-102) Alternator 90 AMP	1	
-28	461 628		FUSE HOLDER - (#HHJ-A)	2	
-29	461 623		FUSE - (AGC5)	2	
-30	21753-02		BOARD ASSEMBLY - Terminal (Complete)	1	
-31	21751-03		BOARD ASSEMBLY - Terminal	1	
-32	460 901		FLASHER - Stall warning	1	
-33	452 897		BLOCK - Flasher	1	
-34	472 653		LIGHTER - Cigar (#60248)	1	
-35	47732-03		DIMMER ASSEMBLY - Instrument lights	1	

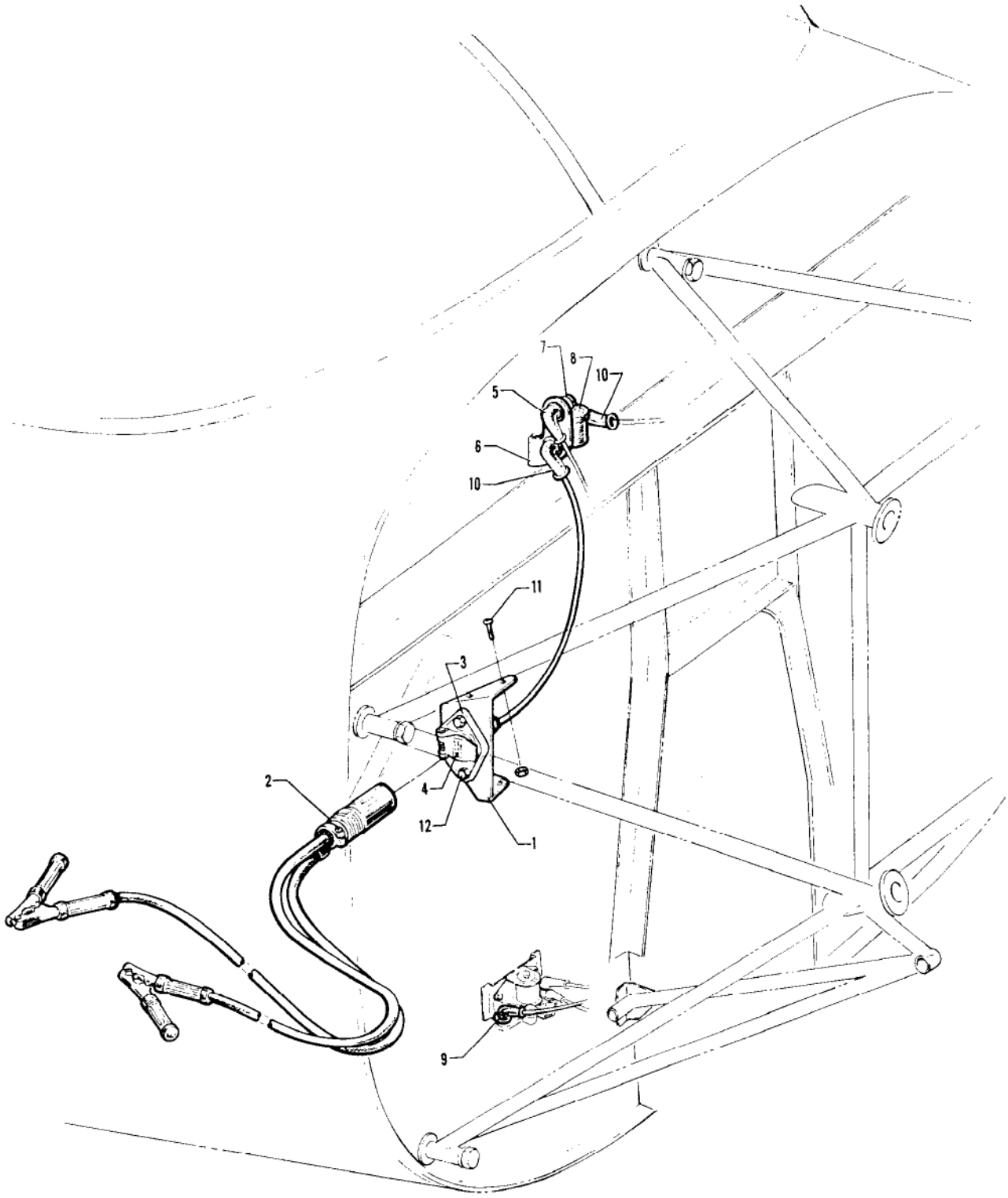

Figure 33C. External Power Supply
(Serial Nos. 24-4247, 24-4300 and up)

Figure and Index Number	Part Number	Code	NOMENCLATURE	No. Req.	SERIAL NUMBERS AFFECTED
33B-	24628		DRAWING - External Power Supply Installation		
-1	62226-00		SPACER - Auxiliary power receptacle	1	
-2	62227-00		PLATE - Auxiliary power receptacle	1	
-3	62228-00		TUBE - Auxiliary power receptacle support	1	
-4	62342-00		BRACKET - Power relay	1	
-5	62343-00		PLACARD - External power	1	
-6	456 728		DIODE - (#IN3208)	1	
-7	476 673		NIPPLE - (MS25171-1S)	1	
-8	62355-02		PLUG ASSEMBLY - Power connector	1	
-9	62355-03		SOCKET ASSEMBLY - Power connector	1	
-10	484 373		SOLENOID - (#24059)	1	
-11	453 171		BOOT - (#5466)	1	
12	401 186		BOLT - (AN5-6A)	2	
	407 566		WASHER - (AN960-516)	2	
	404 837		NUT - (MS20364-524C)	2	
-13	417 715		SCREW - (AN520-10R8)	1	
	407 104		WASHER - (AN935-10)	1	
	406 870		RIVNUT - (A10K-75)	1	
-14	416 794		SCREW - (AN507-1032-R14)	4	
	494 087		WASHER - (A3235-020-1)	4	
	407 564		WASHER - (AN960-10)	4	
	404 835		NUT - (MS20364-1032C)	4	
-15	417 715		SCREW - (AN520-10R8)	2	
	407 104		WASHER - (AN935-10)	2	
	81342-13		WASHER	2	
	406 870		RIVNUT - (A10K-75)	2	

A - Used on PA-24-180, PA-24-250 and PA-24-260 with serial numbers 24-2299 to 24-4246 inclusive, 24-4248 to 24-4299 inclusive, and PA-24-400 with serial numbers 26-2 and up.

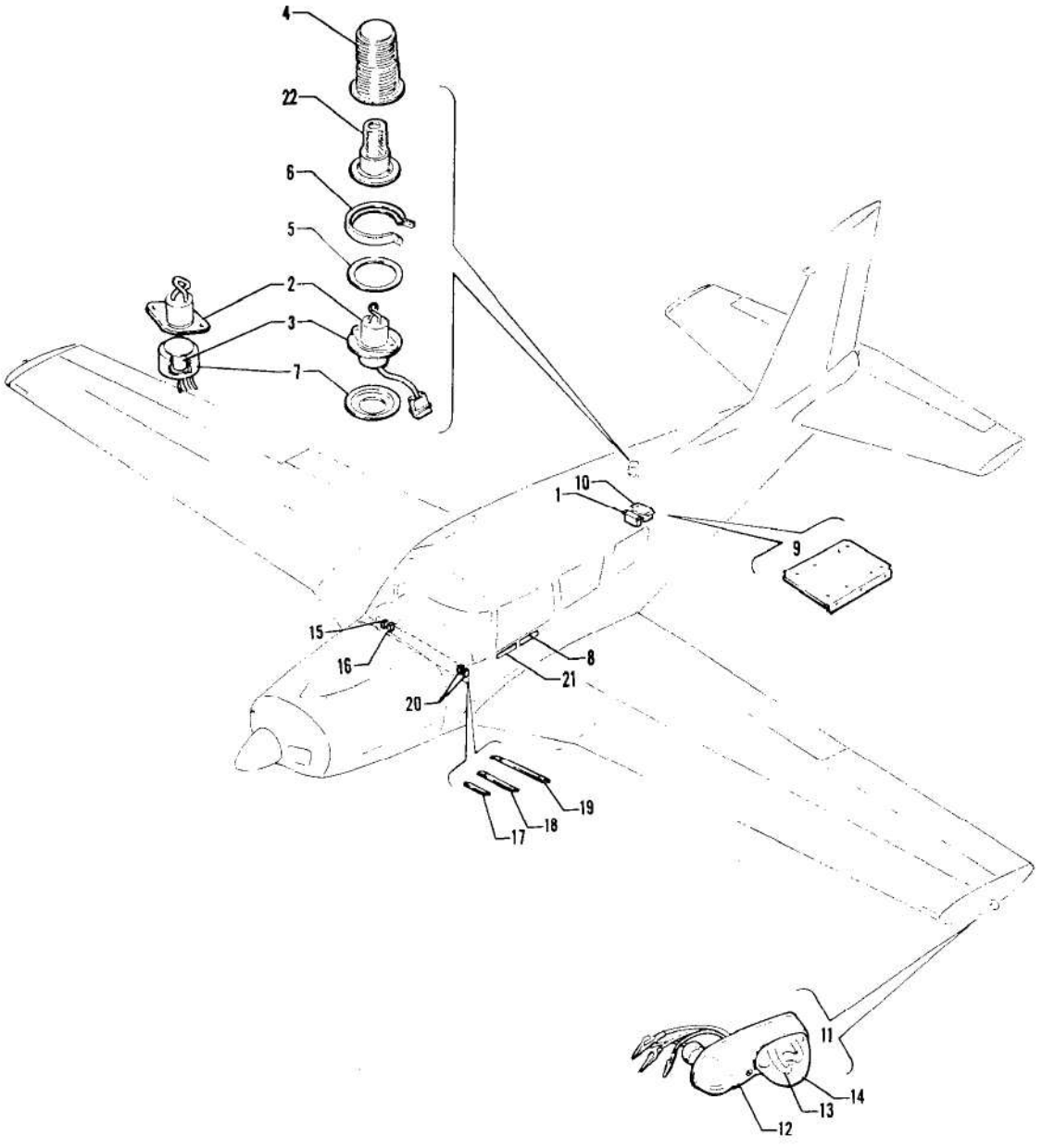

Figure 33D. Anti-Collision Strobe Lights Installation

Figure and Index Number	Part Number	Code	NOMENCLATURE	No. Req.	SERIAL NUMBERS AFFECTED
33C-	25584	A	DRAWING - External Power Supply Installation		
	26814		DRAWING - External Power Supply Installation		24-4783, 24-4804 and up
-1	25446-00	A	BRACKET - Auxiliary power receptacle mounting	1	
-2	62355-02		PLUG ASSEMBLY - Power connector	1	
-3	62355-03		SOCKET ASSEMBLY - Power connector	1	
-4	62343-00	A	PLACARD - External power	1	
	32739-00		PLACARD - External power	1	24-4783, 24-4804 and up
-5	23969-02	A	NIPPLE - Electrical terminal	1	
-6	25632-00	A	BRACKET - Diode mounting	1	
-7	456 728		DIODE - (#IN3208)	1	
-8	484 373		SOLENOID - (#24059)	1	
-9	453 171	A	BOOT - (#5466)	1	
	23969-04		NIPPLE - Electrical terminal	2	24-4783, 24-4804 and up
-10	23969-04		NIPPLE - Electrical terminal	2	
-11	417 715	A	SCREW - (AN520-10R8)	4	
	404 887	A	NUT - (MS20365-1032C)	4	
-12	401 185		BOLT - (AN5-5A)	2	
	407 566		WASHER - (AN960-516)	2	
	404 837		NUT - (MS20364-524C)	2	

A - Used on airplanes with serial numbers 24-4247, 24-4300 to 24-4782 inclusive, 24-4784 to 24-4803 inclusive.

When ordering, always specify Part Number, Description and Serial Number of Aircraft

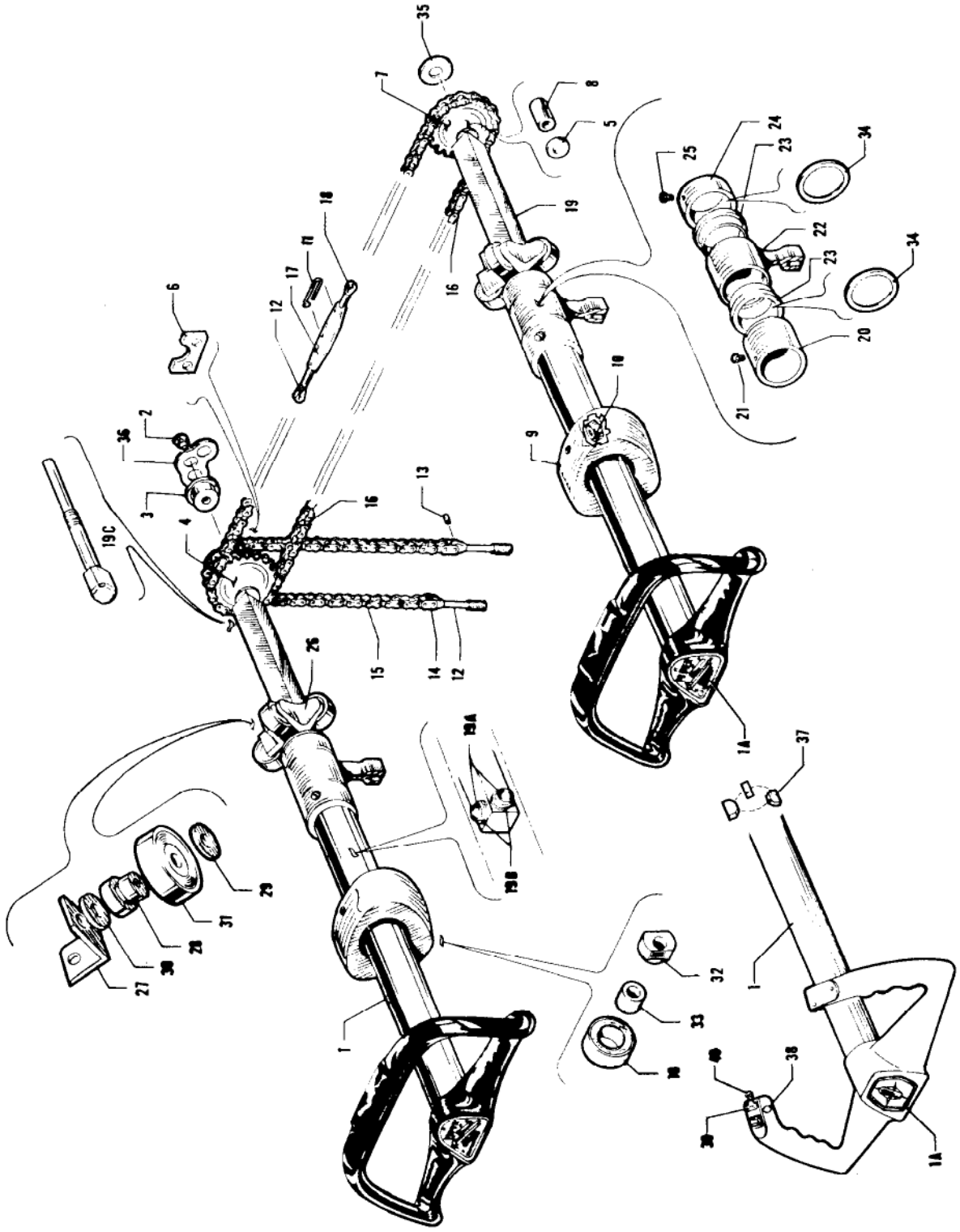

Figure 34. Control Wheel Installation

Figure and Index Number	Part Number	Code	NOMENCLATURE	No. Req.	SERIAL NUMBERS AFFECTED
33D-	27054		DRAWING - Anti-Collision Red Strobe Light Installation		
	27060		DRAWING - Anti-Collision White Strobe Light Installation		
-1	757 359	A	POWER SUPPLY - Strobe light	1	
-2	757 635	A	LIGHT ASSEMBLY - Strobe	1	
-3	757 634	A	SOCKET ASSEMBLY - Tube	1	24-4935 to 24-5026 inclusive
	757 682	A	SOCKET ASSEMBLY - Tube	1	24-5027 and up
-4	27046-03	A	LENS - Strobe light, red	1	24-4935 to 24-5026 inclusive
	27046-04	A	LENS - Strobe light, red	1	24-5027 and up
-5	755 005	A	GASKET - Strobe light	1	
-6	755 200	A	CLAMP ASSEMBLY - Right	1	
-7	581 623	A	ADAPTER - Mounting plate (H102 "B")	1	24-4935 to 24-5026 inclusive
	751 308	A	ADAPTER - Mounting plate (H103 "A")	1	24-5027 and up
-8	33048-00	A	PLACARD - Anti-collision, red strobe	1	
-9	27032-00		BRACKET ASSEMBLY - Power supply support	2	
-10	757 360	B	POWER SUPPLY - Strobe light	1	
-11	761 158	B	LIGHT ASSEMBLY - Navigation and strobe, tip, red	1	
	761 159	B	LIGHT ASSEMBLY - Navigation and strobe, tip, green	1	
-12	756 037		RETAINER - Light lens	1	
-13	761 156		TUBE ASSEMBLY - Flash, tip	1	
-14	761 157		LENS - Wing tip strobe	1	
-15	32370-15	A	SWITCH - Anti-collision, illuminated (487 780)	1	
-16	32370-16	B	SWITCH - Anti-collision, illuminated (487 781)	1	
-17	31506-02		BAR - Bus (1 1/4" L.)	4	
-18	31506-05	A	BAR - Bus (3 1/2" L.)	1	
-19	31506-07	B	BAR - Bus (4 1/2" L.)	1	
-20	454 656		CIRCUIT BREAKER - (109-205-102) 5 AMP	2	
-21	33038-00	B	PLACARD - Strobe light, tip	1	
-22	757 681	A	SHIELD - (A406D)	1	24-5027 and up

A - Used if Anti-Collision Red Strobe Light is installed.
B - Used if Anti-Collision White Strobe Lights are installed.

When ordering, always specify Part Number, Description and Serial Number of Aircraft

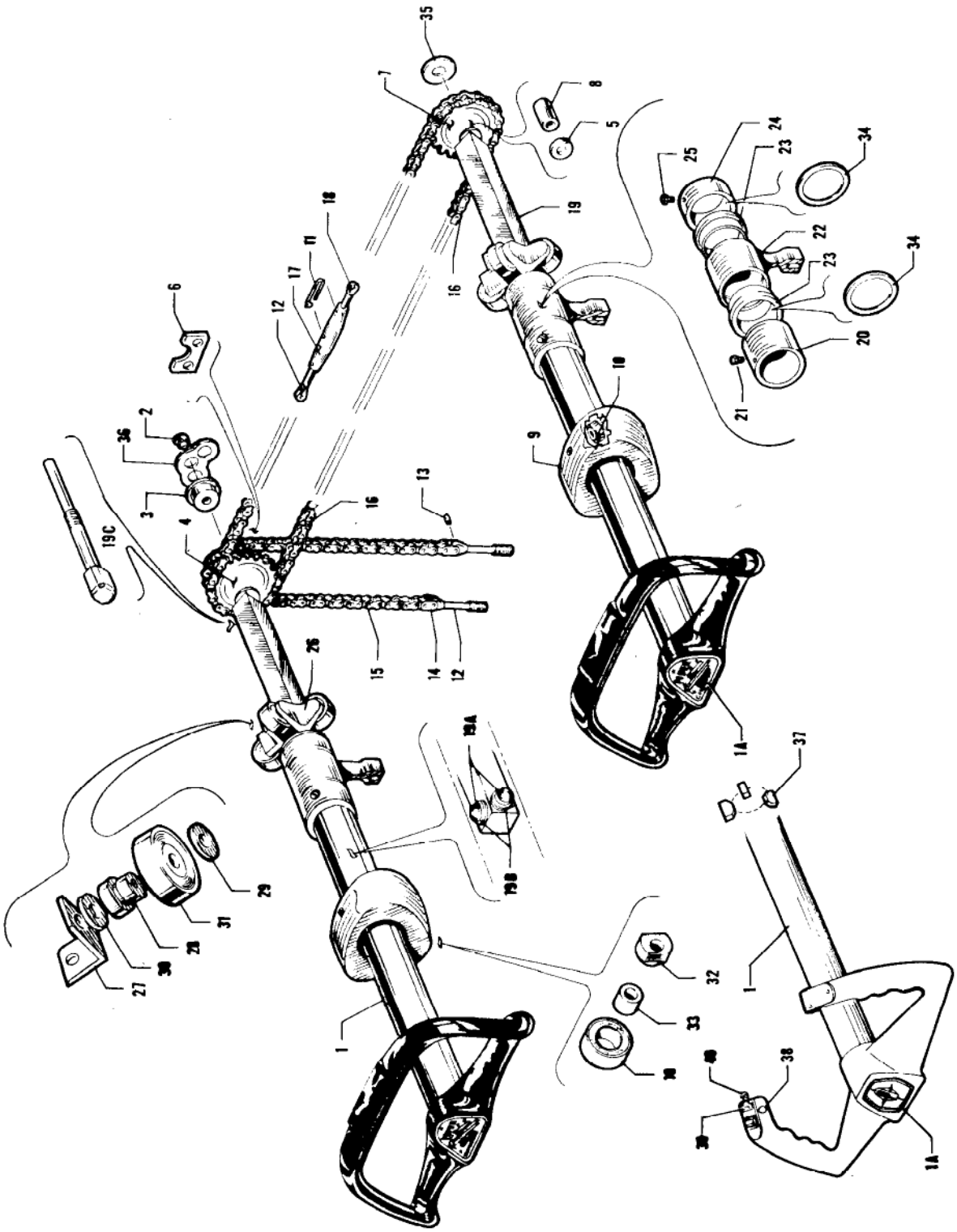

Figure 34. Control Wheel Installation

Figure and Index Number	Part Number	Code	NOMENCLATURE	No. Req.	SERIAL NUMBERS AFFECTED
34-	20985	XY	DRAWING - Control Wheel Installation		24-1 to 24-2843 inclusive
	22988	VY	DRAWING - Control Wheel Installation		24-2844 to 24-4768 inclusive
	20985	X	DRAWING - Control Wheel Installation		24-2844 and up
	22988	Z	DRAWING - Control Wheel Installation		
	26173	V	DRAWING - Control Wheel Installation		24-4769 to 24-4782 inclusive, 24-4784 to 24-4803 inclusive
	26689	V	DRAWING - Control Wheel Installation		24-4783, 24-4804 and up
-1	20965-00	XYZ	WHEEL ASSEMBLY - Control, black	2	
	20965-00	V	WHEEL ASSEMBLY - Control, black	2	24-3642, 24-4000 to 24-4110 incl.
	20965-07	V	WHEEL ASSEMBLY - Control, black	2	24-4111 to 24-4687 inclusive
	20965-10	V	WHEEL ASSEMBLY - Control, black	2	24-4688 to 24-4782 inclusive, 24-4784 to 24-4803 inclusive
	26665-02	V	WHEEL ASSEMBLY - Control, black	2	24-4783, 24-4804 and up
-1a	20462-00	A	MEDALLION ASSEMBLY - Control wheel (chrome & blue)	1	
	20462-02	A	MEDALLION ASSEMBLY - Control wheel (bronze & tan)	1	
	20462-03	A	MEDALLION ASSEMBLY - Control wheel (bronze & black)	1	
	20462-04	A	MEDALLION ASSEMBLY - Control wheel (chrome & black)	1	
	474 345		MEDALLION ASSEMBLY - Control wheel (#8706-1)	1	24-4783, 24-4804 and up
-2	453 638	X	BUTTON - Plug (#SS51351)	2	
-3	452 340		BEARING - (46677-00)	4	
-4	21057-00	XY	SPROCKET ASSEMBLY - Double	1	24-1 to 24-2843 inclusive
	22947-00	Y	SPROCKET ASSEMBLY - Double	1	24-2844 to 24-3258 inclusive
	23323-00	VYZ	SPROCKET ASSEMBLY - Double	1	24-3259 and up, 26-2 and up
	21057-00	X	SPROCKET ASSEMBLY - Double	1	24-2844 and up
-5	81342-93		WASHER	2	
-6	20925-00		STOP - Aileron	1	24-1 to 24-2843 inclusive
	22805-00		STOP - Aileron	1	24-2844 to 24-3258 inclusive
	23322-00	VYZ	STOP - Aileron	1	24-3259 and up, 26-2 and up
	20925-00	X	STOP - Aileron	1	24-2844 and up
-7	20999-00		SPROCKET	1	
-8	21001-00		BUSHING - Spacer	1	
-9	20928-00		COVER - Control wheel shaft (black)	2	24-1 to 24-4768 inclusive, 26-2 and up
	20928-02		COVER - Control wheel shaft (gray)	2	24-1 to 24-4768 inclusive, 26-2 and up
	42537-00	V	COVER - Control wheel shaft	2	24-4769 and up
-10	452 355	X	BEARING - (#CS1282)	6	24-1 to 24-60 inclusive
	14976-02		BEARING - Bottom	2	24-61 to 24-4768 inclusive, 26-2 and up
	14976-03		BEARING - Top	1	24-61 to 24-4768 inclusive, 26-2 and up

A - Used on airplanes with serial numbers 24-1 to 24-4782 inclusive, and 24-4784 to 24-4803 inclusive.
V - Used on PA-24-260 airplanes only.
X - Used on PA-24-180 airplanes only.
Y - Used on PA-24-250 airplanes only.
Z - Used on PA-24-400 airplanes only.

Figure and Index Number	Part Number	Code	NOMENCLATURE	No. Req.	SERIAL NUMBERS AFFECTED
34-11	454 867		CLIP - Turnbuckle (NAS651-16S)	4	
-12	459 930		EYE - Turnbuckle (NAS648-22-RS)	4	
-13	80012-95		BUSHING	6	
-14	472 684		LINK - Chain connector	6	
-15	13445-00		CHAIN ASSEMBLY - Roller	1	24-1 to 24-4718 inclusive, 26-2 and up
	13445-07	V	CHAIN ASSEMBLY - Roller	1	24-4719 and up
-16	13445-04		CHAIN ASSEMBLY - Roller	2	
-17	452 011		BARREL - Turnbuckle (NAS649-B32S)	2	
-18	459 928		EYE - Turnbuckle (NAS648-22-LS)	2	
-19	20975-03		TUBE ASSEMBLY - Control wheel shaft, left (with stud assembly)	1	
	20975-00		TUBE ASSEMBLY - Control wheel shaft, left (less stud assembly)	1	
	20975-00		TUBE ASSEMBLY - Control wheel shaft, right	1	
-19a	20973-00	X	STUD - Control wheel tube guide	4	24-1 to 24-79 inclusive
	21470-00		STUD - Control wheel tube guide	4	24-80 and up, 26-2 and up
-19b	81342-78		SHIM - Control wheel tube guide stud	AR	
-19c	23394-00		STUD ASSEMBLY - Control wheel sprocket, left	1	
-20	20994-00	X	BEARING - Control wheel shaft rear	2	24-1 to 24-27 inclusive
	21454-00		BEARING - Control wheel shaft rear	2	24-28 and up, 26-2 and up
-21	20995-00		STUD - Control wheel shaft rear bearing	4	
-22	20998-00	X	BEARING ASSEMBLY - Control wheel shaft rear	2	24-1 to 24-27 inclusive
	21450-00		BEARING ASSEMBLY - Control wheel shaft rear	2	24-28 and up, 26-2 and up
-23	20996-00		BEARING - Control wheel shaft rear	2	
-24	20938-00		BEARING - Control wheel shaft front	2	
-25	20997-00		STUD - Control wheel shaft front bearing	8	
-26	20963-00		FITTING - Roller attachment	2	
-27	20957-00		ANGLE - Corner support	4	
-28	20956-00		BUSHING - Eccentric	8	
-29	81342-92		WASHER	8	
-30	81342-91		WASHER	AR	
-31	452 369		BEARING	4	
-32	21469-00		BUSHING - Eccentric	4	24-61 to 24-4768 inclusive, 26-2 and up
-33	14976-06		BUSHING	2	24-61 to 24-4768 inclusive, 26-2 and up
-34	19513-14		WASHER - Seal	4	24-1099 and up, 26-2 and up
-35	19513-16		WASHER - Seal	1	
-36	21998-00		SEAL - Firewall	1	
-37	42538-00	V	SLIDE - Control wheel shaft	6	24-4769 and up
-38	43255-02	V	BUTTON - Plug	1	24-4783, 24-4804 and up
-39	43364-00	V	PLACARD - Boom mike (581 375)	1	
-40	487 904	V	SWITCH - Boom mike (#39-1)	1	

V - Used on PA-24-260 airplanes only.
X - Used on PA-24-180 airplanes only.

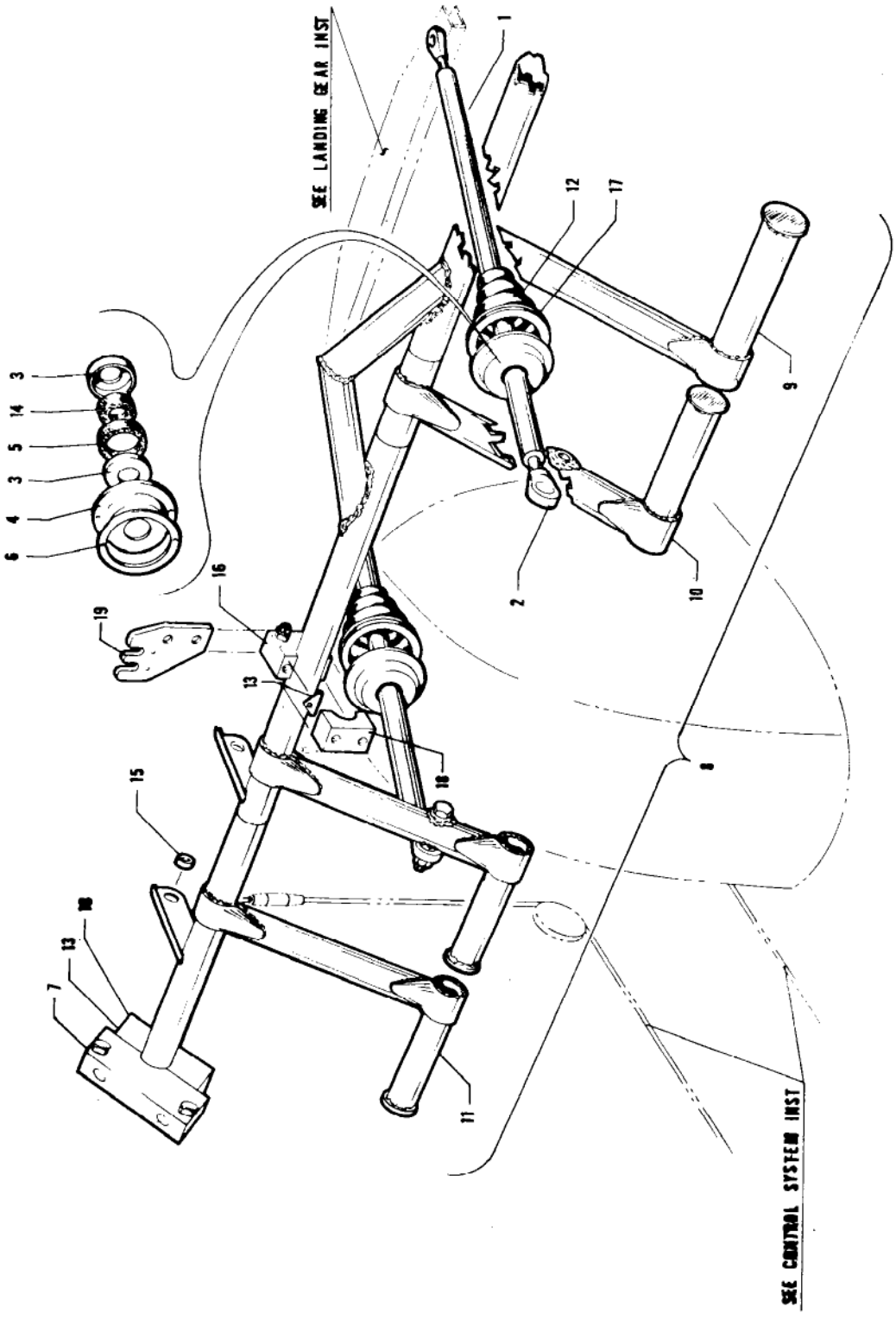

Figure 35. Rudder Pedal Installation

Figure and Index Number	Part Number	Code	NOMENCLATURE	No. Req.	SERIAL NUMBERS AFFECTED
35-	20986	A	DRAWING - Rudder Pedal Installation		
	22371	B	DRAWING - Rudder Pedal Installation		
-1	20873-00		ROD ASSEMBLY - Nose wheel steering	2	
-2	452 383		BEARING - Rod end (24166-00)	2	
-3	13134-00		HOUSING - Steering rod packing, inner	4	
-4	13135-02		HOUSING - Steering rod packing, outer, left	1	
	13135-00		HOUSING - Steering rod packing, outer, right	1	
-5	189 410		PACKING - Steering rod	10"	
-6	21042-02		PLATE - Steering rod seal, left	1	
	21042-00		PLATE - Steering rod seal, right	1	
-7	20488-02		BLOCK - Rudder pedal tube, left, upper	1	
	20488-03		BLOCK - Rudder pedal tube, right, upper	1	
-8	20884-00	A	TUBE ASSEMBLY - Rudder pedal torque	1	
	22370-00	C	TUBE ASSEMBLY - Rudder pedal torque	1	
	23871-00	D	TUBE ASSEMBLY - Rudder pedal torque	1	
-9	20883-00	A	TUBE ASSEMBLY - Rudder pedal torque, right	1	
	22207-00	B	TUBE ASSEMBLY - Rudder pedal torque, right	1	
-10	20882-00	AC	TUBE ASSEMBLY - Rudder pedal torque, center	1	
	20882-08	D	TUBE ASSEMBLY - Rudder pedal torque, center	1	
-11	20880-00	A	TUBE ASSEMBLY - Rudder pedal torque, left	1	
	22239-00	B	TUBE ASSEMBLY - Rudder pedal torque, left	1	
-12	21378-00		BOOT - Nose wheel steering rod	2	
-13	41371-02		SHIM - Rudder pedal torque bearing .010	AR	
	41371-03		SHIM - Rudder pedal torque bearing .015	AR	
	41371-04		SHIM - Rudder pedal torque bearing .032	AR	
-14	85012-71		PACKING - Washer, steering rod seal	2	
-15	14843-48		BUSHING	2	
-16	21014-00	A	BLOCK - Rudder pedal tube bearing	1	
	22205-00	B	BLOCK - Rudder pedal tube bearing	1	
-17	21377-00		PLATE - Nose wheel steering rod boot	2	
-18	17203-02		BLOCK - Rudder pedal torque tube, left	1	
	17203-03		BLOCK - Rudder pedal torque tube, right	2	
-19	26270-00		PLATE ASSEMBLY - Cable attachment	1	24-4783, 24-4804 and up

A - Used on PA-24-180 and PA-24-250 with serial numbers 24-1 to 24-2174, 24-2176 to 24-2298 inclusive.
B - Used on PA-24-180 and PA-24-250 with serial numbers 24-2175, 24-2299 and up, PA-24-400 and PA-24-260.
C - Used on PA-24-180 and PA-24-250 with serial numbers 24-2175, 24-2299 to 24-3558 inclusive.
D - Used on PA-24-180 and PA-24-250 with serial numbers 24-3559 and up, PA-24-400 and PA-24-260.

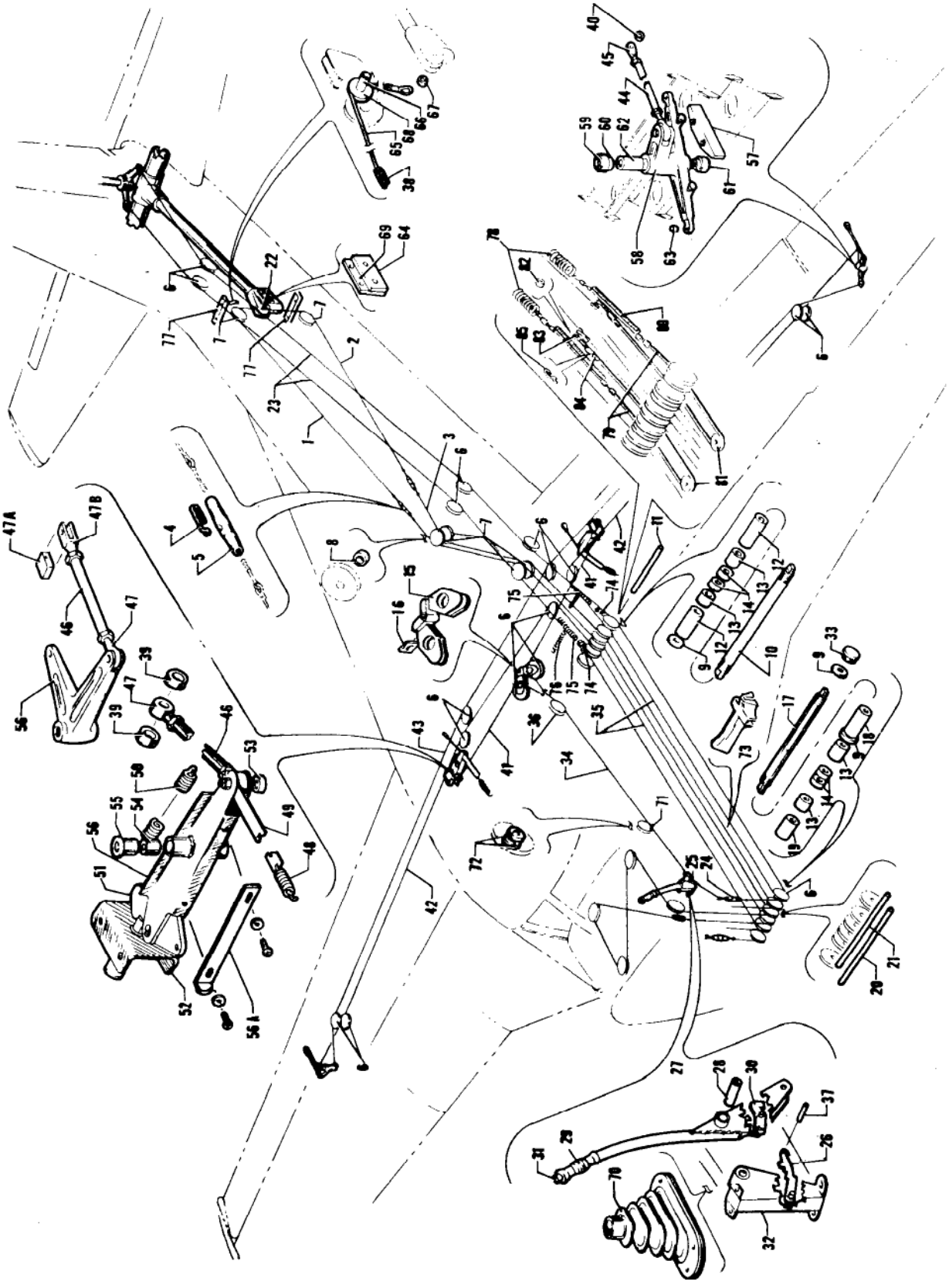

Figure 36. Control Surfaces Control Systems

Figure and Index Number	Part Number	Code	NOMENCLATURE	No. Req.	SERIAL NUMBERS AFFECTED
36-	20948	XY	DRAWING - Wing Installation		
	23477	Z	DRAWING - Wing Installation		
	24814	V	DRAWING - Wing Installation		
	20955	X	DRAWING - Control System Installation		24-1 to 24-102 inclusive
	21553	XY	DRAWING - Control System Installation		24-103 to 24-2843 inclusive
	23029	Y	DRAWING - Control System Installation		24-2844 and up
	21553	X	DRAWING - Control System Installation		24-2844 and up
	23014	Z	DRAWING - Control System Installation		
	24869	AV	DRAWING - Control System Installation		
	25402	BV	DRAWING - Control System Installation		
	26702	V	DRAWING - Control System Installation		24-4783, 24-4804 and up
-1	20944-02	X	CABLE ASSEMBLY - Stabilator control, upper	1	24-1 to 24-102 inclusive
	21565-00	XY	CABLE ASSEMBLY - Stabilator control, upper	1	24-103 to 24-2631 inclusive
	21565-02	XY	CABLE ASSEMBLY - Stabilator control, upper	1	24-2632 to 24-2843 inclusive
	21565-00	VY	CABLE ASSEMBLY - Stabilator control, upper	1	24-2844 and up
	21565-02	X	CABLE ASSEMBLY - Stabilator control, upper	1	24-2844 and up
	22966-02	Z	CABLE ASSEMBLY - Stabilator control, upper	1	
-2	20944-03	X	CABLE ASSEMBLY - Stabilator control, lower	1	24-1 to 24-102 inclusive
	20944-05	XY	CABLE ASSEMBLY - Stabilator control, lower	1	24-103 to 24-2631 inclusive
	20944-06	XY	CABLE ASSEMBLY - Stabilator control, lower	1	24-2632 to 24-2843 inclusive
	20944-07	VY	CABLE ASSEMBLY - Stabilator control, lower	1	24-2844 and up
	20944-06	X	CABLE ASSEMBLY - Stabilator control, lower	1	24-2844 and up
	22966-03	Z	CABLE ASSEMBLY - Stabilator control, lower	1	
-3	20945-00	X	CABLE ASSEMBLY - Stabilator control, forward	1	24-1 to 24-102 inclusive
	20945-03	XY	CABLE ASSEMBLY - Stabilator control, forward	1	24-103 to 24-2843 inclusive
	20945-05	XY	CABLE ASSEMBLY - Stabilator control, forward	1	24-2844 and up
	20945-06	Z	CABLE ASSEMBLY - Stabilator control, forward	1	
	20945-07	V	CABLE ASSEMBLY - Stabilator control, forward	1	24-3642, 24-4000 to 24-4122 incl.
	20945-06	V	CABLE ASSEMBLY - Stabilator control, forward	1	24-4123 to 24-4566 inclusive
	20945 03	V	CABLE ASSEMBLY - Stabilator control, forward	1	24-4567 and up
-4	454 867		CLIP - Turnbuckle safety (NAS651-16S)	8	
-5	452 011		BARREL - Turnbuckle (NAS649B32S)	4	
-6	41001-00		PULLEY - Cable (.312 bearing)	28	
-7	41001-03		PULLEY - Cable (.250 bearing)	11	
-8	19513-93		WASHER	2	
-9	80122-25		WASHER	24	
-10	20438-02		ROD - Pulley mounting (8")	1	
-11	20437-04		GUARD - Pulley cable	1	
-12	14843-35	B	BUSHING	2	
	42571-09	V	BUSHING	2	24-4783, 24-4804 and up
-13	14843-36		BUSHING	4	
-14	14843-37		BUSHING	4	

A - Used on PA-24-260 with serial numbers 24-3642, 24-4000 to 24-4246, 24-4248 to 24-4299 inclusive.
B - Used on PA-24-260 with serial numbers 24-4247, 24-4300 to 24-4782, 24-4784 to 24-4803 inclusive.
V - Used on PA-24-260 airplanes only.
X - Used on PA-24-180 airplanes only.
Y - Used on PA-24-250 airplanes only.
Z - Used on PA-24-400 airplanes only.

Figure and Index Number	Part Number	Code	NOMENCLATURE	No. Req.	SERIAL NUMBERS AFFECTED
36-15	20444-00	Y	BRACKET - Flap pulley	2	24-103 to 24-2843 inclusive
	20444-00	X	BRACKET - Flap pulley	2	
-16	81102-23	Y	WASHER - Square	2	24-103 to 24-2843 inclusive
	81102-23	X	WASHER - Square	2	
-17	20438-03		ROD - Pulley mounting (8-9/16")	1	
-18	14843-38		BUSHING	1	
-19	14843-39		BUSHING	1	
-20	20437-05		GUARD - Pulley cable	1	
-21	20437-06		GUARD - Pulley cable	1	
-22	20849-00	X	WEIGHT - Stabilator balance	1	24-1 to 24-102 inclusive
	21740-00	XY	WEIGHT - Stabilator balance	1	24-103 to 24-2843 inclusive
	21740-02	VY	WEIGHT - Stabilator balance	1	24-2844 and up
	21740-00	X	WEIGHT - Stabilator balance	1	24-2844 and up
	23175-00	Z	WEIGHT - Stabilator balance	1	
-23	21048-00	B	CABLE ASSEMBLY - Rudder control	2	
	21048-08	V	CABLE ASSEMBLY - Rudder control	2	24-4783, 24-4804 and up
	21048-04	Z	CABLE ASSEMBLY - Rudder control, left	1	
	21048-05	Z	CABLE ASSEMBLY - Rudder control, right	1	
-24	452 011		BARREL - Turnbuckle (NAS649-B32S)	1	
-25	461 136		FORK - Turnbuckle (NAS645-22RS)	1	
-26	20968-00	AXY	RATCHET ASSEMBLY - Flap control	1	
-27	20974-00	AXY	LEVER ASSEMBLY - Flap	1	
-28	452 370	AXY	BEARING - Oilite (A-401)	1	
-29	21926-00	AXY	GRIP - Flap lever	1	
-30	20967-00	AXY	PAWL - Flap lever	1	
-31	20969-00	AXY	PLUNGER ASSEMBLY - Flap lever	1	
-32	20976-00	AXY	BRACKET - Flap handle support	1	
-33	453 602		BUTTON - Plug (#48152)	1	
-34	20942-02	AXY	CABLE ASSEMBLY - Flap control	1	
-35	20943-03		CABLE ASSEMBLY - Aileron control	2	24-1 to 24-4718 inclusive, 26-2 and up
	26049-02	V	CABLE ASSEMBLY - Aileron control	2	24-4719 and up
-36	481 623		PULLEY - (AN210-3B)	1	
-37	480 700	AXY	PIN - Roll (#59-022-094-0375)	1	
-38	21295-00		SPRING	1	
-39	80012-22	AXY	BUSHING	4	
-40	80012-94	AXY	BUSHING	4	
-41	20944-04	AXY	CABLE ASSEMBLY - Flap	2	
-42	20943-04	XY	CABLE ASSEMBLY - Aileron, left	1	
	20943-02	XY	CABLE ASSEMBLY - Aileron, right	1	
	20943-06	VZ	CABLE ASSEMBLY - Aileron, left	1	
	20943-05	VZ	CABLE ASSEMBLY - Aileron, right	1	
-43	14300-06	XY	CABLE ASSEMBLY - Aileron balance	1	
	24659-00	Z	CABLE ASSEMBLY - Aileron balance	1	
	14300-09	V	CABLE ASSEMBLY - Aileron balance	1	

A - Used on PA-24-180 with serial numbers 24-1 and up, and PA-24-250 with serial numbers 24-105 to 24-2843.
B - Used on PA-24-180 and PA-24-250 with serial numbers 24-1 and up, and PA-24-260 with serial numbers 24-3642, 24-4000 to 24-4782 inclusive, 24-4784 to 24-4803 inclusive.
V - Used on PA-24-260 airplanes only.
X - Used on PA-24-180 airplanes only.
Y - Used on PA-24-250 airplanes only.
Z - Used on PA-24-400 airplanes only.

Figure and Index Number	Part Number	Code	NOMENCLATURE	No. Req.	SERIAL NUMBERS AFFECTED
36-44	18316-02		ROD ASSEMBLY - Aileron control	2	
-45	452 383		BEARING - Rod end (24166-00)	2	
-46	18316-03	AXY	ROD ASSEMBLY - Flap control	2	
	22855-00	VYZ	ROD ASSEMBLY - Flap control	2	24-2844 and up, 26-2 and up
-47	452 383	AXY	BEARING - Rod end (24166-00)	2	
	452 412	VYZ	BEARING - Rod end (#HMX-4S)	1	24-2844 and up, 26-2 and up
-47a	22852-00	VYZ	LINK - Flap control rod	1	24-2844 and up, 26-2 and up
-47b	22853-00	VYZ	CLEVIS - Flap control rod	1	24-2844 and up, 26-2 and up
-48	21277-00	AXY	SPRING - Flap bellcrank tension	2	
-49	21229-00	AXY	LINK - Flap bellcrank tension	2	
-50	83302-49	AXY	SPRING - Flap bellcrank tension	2	
-51	20674-00	AXY	PLATE - Flap bellcrank catch release	2	
-52	20727-00	AXY	HOUSING ASSEMBLY - Release pin	2	
-53	14843-13	AXY	BEARING	2	
-54	14843-08	AXY	BEARING	2	
-55	452 365	AXY	BEARING - Oilite (F310-2)	4	
-56	20673-00	X	BELLCRANK ASSEMBLY - Flap	2	24-1 to 24-38, 24-40 to 24-63, 24-65 to 24-72 inclusive
	21717-00	XY	BELLCRANK ASSEMBLY - Flap	2	24-39, 24-64, 24-66 to 24-71, 24-73 to 24-2843 inclusive
	21717-00	X	BELLCRANK ASSEMBLY - Flap	2	24-2844 and up
	22740-00	VYZ	BELLCRANK ASSEMBLY - Flap	2	24-2844 and up, 26-2 and up
-56a	23083-00	AXY	STOP - Flap	1	
-57	20290-00		BLOCK - Aileron bellcrank stop	2	
-58	20256-00	XY	BELLCRANK ASSEMBLY - Aileron, left	1	24-1 to 24-2843 inclusive
	20256-01	XY	BELLCRANK ASSEMBLY - Aileron, right	1	24-1 to 24-2843 inclusive
	22748-00	VYZ	BELLCRANK ASSEMBLY - Aileron, left	1	24-2844 and up, 26-2 and up
	22748-01	VYZ	BELLCRANK ASSEMBLY - Aileron, right	1	24-2844 and up, 26-2 and up
	20256-00	X	BELLCRANK ASSEMBLY - Aileron, left	1	24-2844 and up
	20256-01	X	BELLCRANK ASSEMBLY - Aileron, right	1	24-2844 and up
-59	452 361		BEARING - (B-86)	1	
-60	452 362		BEARING - (1RA-5)	1	
-61	452 344		BEARING - (5035)	1	
-62	80022-87		BUSHING	1	
-63	80022-74		BUSHING	2	
-64	81262-80	VXY	LINK - Shim (.062)	AR	
	81262 81	VXY	LINK - Shim (.125)	AR	
-65	21508-00	X	CABLE ASSEMBLY - Stabilator extension spring	1	24-1 to 24-102 inclusive
	21563-00	VXY	CABLE ASSEMBLY - Stabilator extension spring	1	24-103 and up
	22968-00	Z	CABLE ASSEMBLY - Stabilator extension spring	1	
-66	14976-07		BUSHING	1	24-1 to 24-102 inclusive
	14976 09		BUSHING	2	24-103 and up
-67	14976-08		BUSHING	1	24-1 to 24-102 inclusive
-68	481 621		PULLEY - (AN210-1B)	1	
-69	21564-00	VXY	PLATE - Stabilator balance weight	4	24-103 and up
	23179-00	Z	PLATE - Stabilator balance weight	AR	

A - Used on PA-24-180 with serial numbers 24-1 and up, and PA-24-250 with serial numbers 24-105 to 24-2843.
V - Used on PA-24-260 airplanes only.
X - Used on PA-24-180 airplanes only.
Y - Used on PA-24-250 airplanes only.
Z - Used on PA-24-400 airplanes only.

Figure and Index Number	Part Number	Code	NOMENCLATURE	No. Req.	SERIAL NUMBERS AFFECTED
36-70	21766-00	AXY	BOOT ASSEMBLY - Flap lever	1	
-71	80421-00	XY	PULLEY	1	24-2175, 24-2299 to 24-2843
	80421-00	VX	PULLEY	1	24-2844 and up
-72	80122-100	XY	WASHER	2	24-2175, 24-2299 to 24-2843
	80122-100	X	WASHER	2	24-2844 and up
-73	24329-00		PLATE - Control cable rub	1	
-74	24629-00	Z	SPRING - Control cable connector	2	
-75	24631-00	Z	CABLE ASSEMBLY - Connector, right, rudder cable	1	
	24631-02	Z	CABLE ASSEMBLY - Connector, left, rudder cable	1	
-76	487 291	Z	SPRING - Cable assembly (#180C-2 1/2)	2	
-77	16771-00	Z	BLOCK - Stabilator balance weight bumper	2	
-78	24629-00	V	SPRING - Control cable connector	2	24-4783, 24-4804 and up
-79	24631-04	V	CABLE ASSEMBLY - Rudder and aileron interconnecting	2	24-4783, 24-4804 and up
-80	487 291	V	SPRING - (#180C-2 1/2)	2	24-4783, 24-4804 and up
-81	481 640	V	PULLEY - (MS24566-1B)	2	24-4783, 24-4804 and up
-82	42129-16	V	BUSHING	2	24-4783, 24-4804 and up
-83	459 958	V	EYE - Turnbuckle (NAS648-8RS)	2	24-4783, 24-4804 and up
-84	452 015	V	BARREL - Turnbuckle (NAS649-B8S)	2	24-4783, 24-4804 and up
-85	454 867	V	CLIP - Safety (NAS651-16S)	4	24-4783, 24-4804 and up

A - Used on PA-24-180 with serial numbers 24-1 and up, and PA-24-250 with serial numbers 24-105 to 24-2843 inclusive.
V - Used on PA-24-260 airplanes only.
X - Used on PA-24-180 airplanes only.
Y - Used on PA-24-250 airplanes only.
Z - Used on PA-24-400 airplanes only.

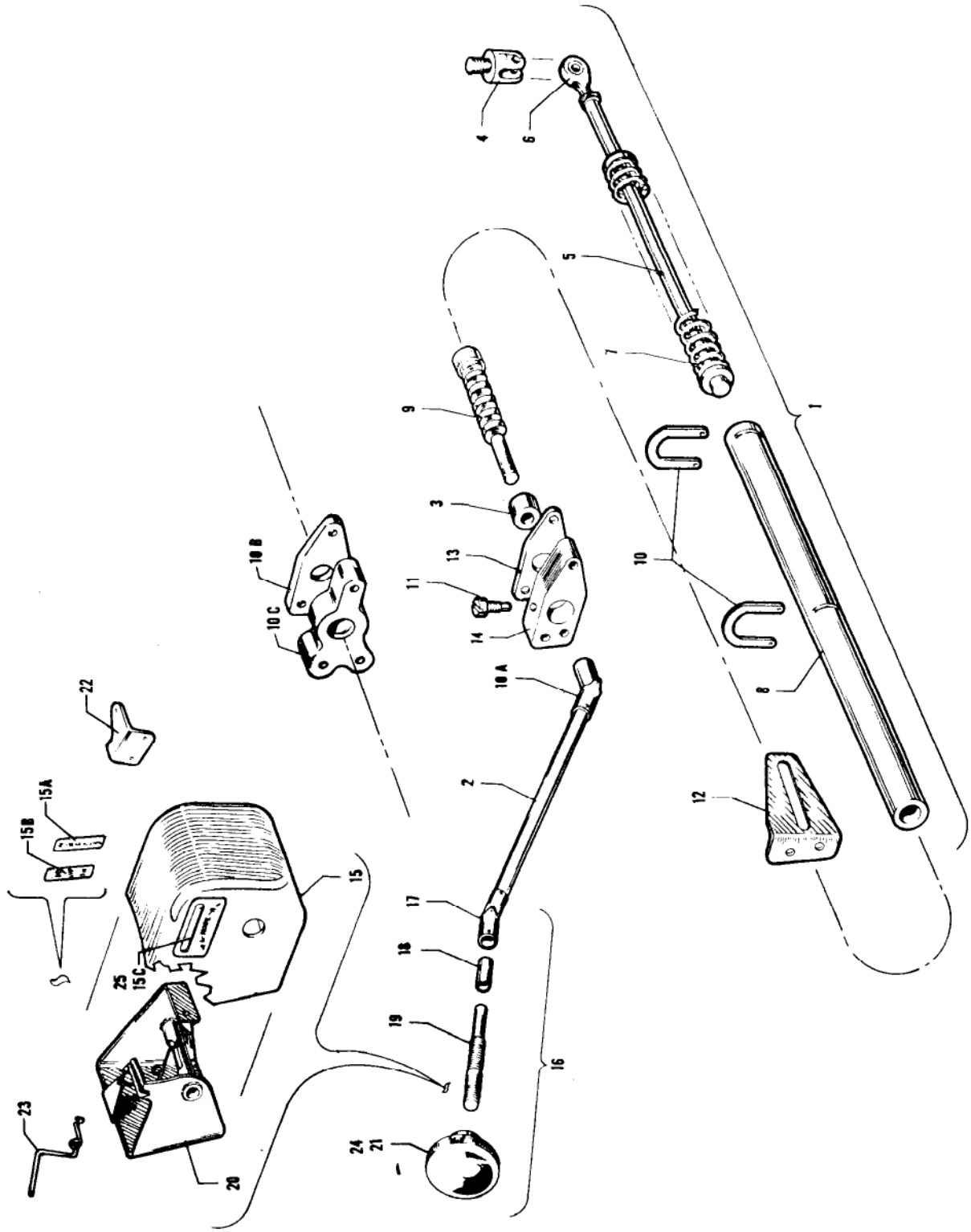

Figure 37. Rudder Trim Mechanism Installation

Figure and Index Number	Part Number	Code	NOMENCLATURE	No Req.	SERIAL NUMBERS AFFECTED
37-	21399	XY	DRAWING - Rudder Trim Installation		24-1 to 24-2843 inclusive
	23180	YZ	DRAWING - Rudder Trim Installation		24-2844 and up, 26-2 and up
	23180	CV	DRAWING - Rudder Trim Installation		
	26720	V	DRAWING - Rudder Trim Installation		24-4783, 24-4804 and up
	21399	X	DRAWING - Rudder Trim Installation		24-2844 and up
-1	21397-02	AXY	TUBE ASSEMBLY - Rudder trim control	1	24-1 to 24-223 inclusive
	21397-03	XY	TUBE ASSEMBLY - Rudder trim control	1	24-224 to 24-2843 inclusive
	23244-02	X	TUBE ASSEMBLY - Rudder trim control	1	24-2844 and up
	23244-00	VYZ	TUBE ASSEMBLY - Rudder trim control	1	24-2844 and up, 26-2 and up
-2	14843-98	X	TUBE - Rudder trim control	1	
	14843-98	Y	TUBE - Rudder trim control	1	24-105 to 24-2843 inclusive
	23165-00	VYZ	TUBE - Rudder trim control	1	24-2844 and up, 26-2 and up
-3	21038-08	XY	BUSHING	1	24-1 to 24-2843 inclusive
	452 393		BEARING - (LHB-6)	1	24-2844 and up, 26-2 and up
-4	21382-02	AXY	CLEVIS - Rudder trim bungee	1	24-1 to 24-223 inclusive
	400 012	B	BOLT - (AN4-17A)	1	24-224 and up
-5	21389-00		ROD ASSEMBLY - Rudder bungee connecting	1	
-6	452 383		BEARING - Rod end (24166-00)	1	
-7	21379-00		SPRING - Rudder bungee connecting rod	1	
-8	21390-00		TUBE ASSEMBLY - Rudder trim bungee	1	
-9	21388-00	XY	SCREW ASSEMBLY - Rudder trim bungee	1	24-1 to 24-2843 inclusive
	23243-00		SCREW ASSEMBLY - Rudder trim bungee	1	24-2844 and up, 26-2 and up
-10	21383-00		CLIP - Spring retainer	2	
-10a	469 132		UNIVERSAL JOINT - (MS20270-B8)	1	
-10b	21384-00	X	SEAL - Rudder trim screw	1	
	21384-02	VYZ	SEAL - Rudder trim screw	1	
-10c	23245-00		BLOCK - Rudder trim screw	1	24-2844 and up, 26-2 and up
-11	20995-00		STUD - Rudder trim rod	2	
-12	21380-00		BRACKET - Rudder trim	1	
-13	21384-00		SEAL - Rudder trim screw support block	1	24-1 to 24-2843 inclusive
-14	21385-00		BLOCK - Rudder trim screw support	1	24-1 to 24-2843 inclusive

A - Order 21397-03 if nose strut serial number 738 and up is installed.
B - Not a component part of rudder trim control tube assembly.
C - Used on PA-24-260 with serial numbers 24-3642, 24-4000 to 24-4782, 24-4784 to 24-4803 inclusive.
V - Used on PA-24-260 airplanes only.
X - Used on PA-24-180 airplanes only.
Y - Used on PA-24-250 airplanes only.
Z - Used on PA-24-400 airplanes only.

Figure and Index Number	Part Number	Code	NOMENCLATURE	No. Req.	SERIAL NUMBERS AFFECTED
37-15	21395-00	XY	COVER - Rudder trim bungee	1	24-1 to 24-2843 inclusive
	23160-00	Y	COVER - Rudder trim bungee	1	24-2844 to 24-3641 inclusive
	21395-00	X	COVER - Rudder trim bungee	1	24-2844 and up
	23160-02	YZ	COVER - Rudder trim bungee	1	24-3642 and up, 26-2 and up
	23160-02	AV	COVER - Rudder trim bungee	1	
	26335-02	V	COVER - Rudder trim bungee, black	1	24-4783, 24-4804 and up
	26335-03	V	COVER - Rudder trim bungee, red	1	24-4783, 24-4804 and up
	26335-04	V	COVER - Rudder trim bungee, blue	1	24-4783, 24-4804 and up
	26335-05	V	COVER - Rudder trim bungee, beige	1	24-4783, 24-4804 and up
-15a	24961-00		PLACARD - Wing flap	1	
-15b	24962-00		PLACARD - Wing flap control	1	
-15c	24969-00	B	PLACARD - Rudder control	1	
-16	21398-00	XY	BRACKET ASSEMBLY - Rudder trim control	1	24-1 to 24-1009 inclusive
	21873-00	XY	BRACKET ASSEMBLY - Rudder trim control	1	24-1010 to 24-2843 inclusive
	23170-00	YZ	BRACKET ASSEMBLY - Rudder trim control	1	24-2844 and up, 26-2 and up
	23170-00	AV	BRACKET ASSEMBLY - Rudder trim control	1	
	26707-02	V	BRACKET ASSEMBLY - Rudder trim control	1	24-4783, 24-4804 and up
-17	469 132		UNIVERSAL JOINT - (MS20270-B8)	1	
-18	14843-97		BUSHING	1	
-19	21394-00	XY	ROD - Rudder bungee control	1	24-1 to 24-1009 inclusive
	21871-00	XYZ	ROD - Rudder bungee control	1	24-1010 and up, 26-2 and up
	21871-00	AV	ROD - Rudder bungee control	1	
	21871-02	V	ROD - Rudder bungee control	1	24-4783, 24-4804 and up
-20	21396-00	XY	BRACKET ASSEMBLY - Rudder trim bungee support	1	24-1 to 24-2843 inclusive
	23171-00	YZ	BRACKET ASSEMBLY - Rudder trim bungee support	1	24-2844 and up, 26-2 and up
	23171-00	AV	BRACKET ASSEMBLY - Rudder trim bungee support	1	
	26581-00	V	BRACKET ASSEMBLY - Rudder trim bungee support	1	24-4783, 24-4804 and up
	21396-00	X	BRACKET ASSEMBLY - Rudder trim bungee support	1	24-2844 and up
-21	471 074	XY	KNOB - Rudder trim control, black	1	24-1 to 24-1009 inclusive
	21870-00	XYZ	KNOB - Rudder trim control, black	1	24-1010 and up, 26-2 and up
	21870-00	AV	KNOB - Rudder trim control, black	1	
-22	26530-00	V	ANGLE - Rudder trim spring attachment	1	24-4783, 24-4804 and up
-23	26540-00	V	SPRING - Rudder trim	1	24-4783, 24-4804 and up
-24	24342-00	V	KNOB - Rudder trim control, black	1	24-4783, 24-4804 and up
-25	26525-00	V	PLACARD - Rudder trim (581 491)	1	24-4783, 24-4804 and up

A - Used on PA-24-260 with serial numbers 24-3642, 24-4000 to 24-4782, 24-4784 to 24-4803 inclusive.
B - Used on PA-24-180 and PA-24-250 with serial numbers 24-1 and up, PA-24-400 with serial numbers 26-2 and up, PA-24-260 with serial numbers 24-3642, 24-4000 to 24-4782, 24-4784 to 24-4803 inclusive.
V - Used on PA-24-260 airplanes only.
X - Used on PA-24-180 airplanes only.
Y - Used on PA-24-250 airplanes only.
Z - Used on PA-24-400 airplanes only.

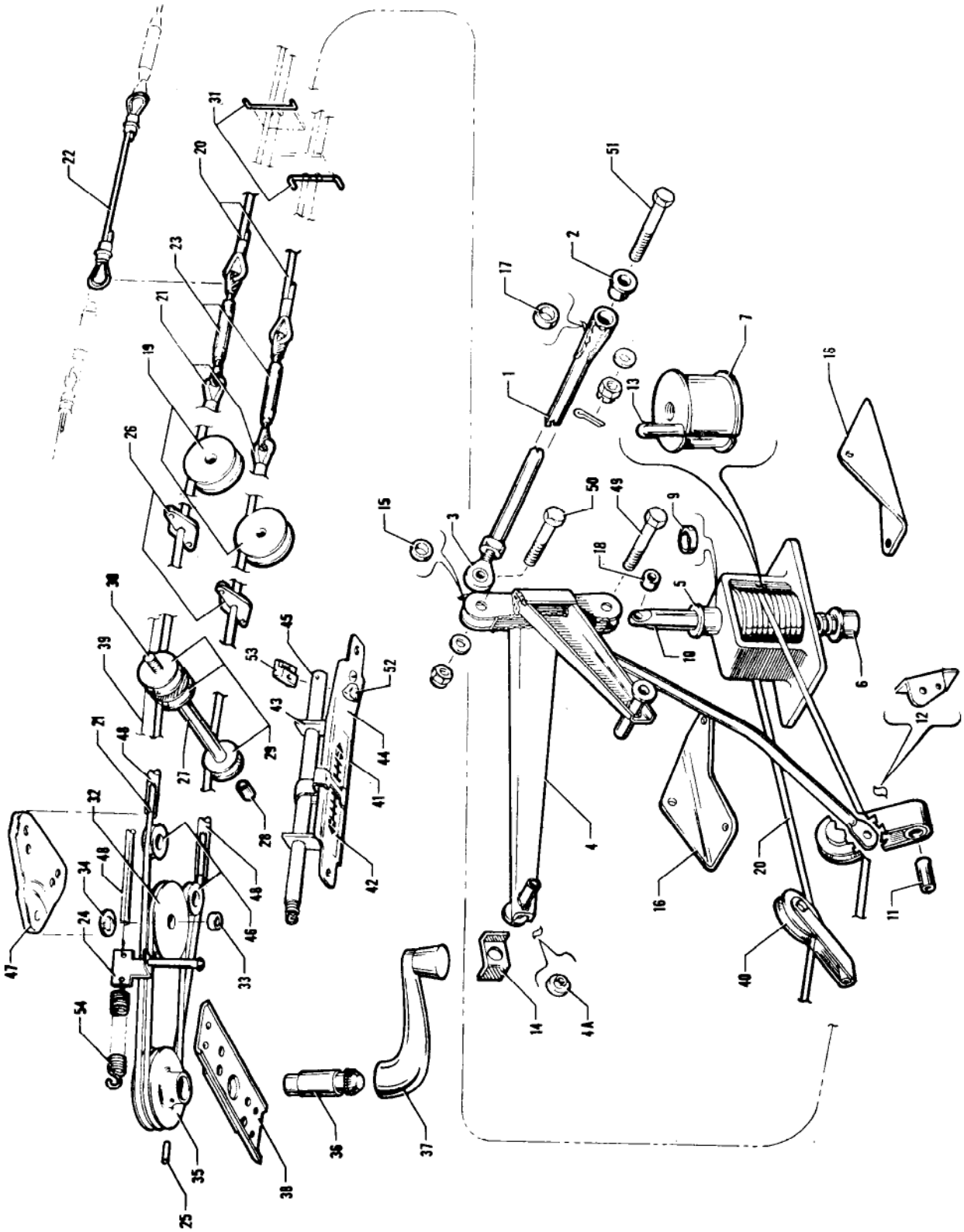

Figure 38. Stabilator Trim Mechanism Installation

Figure and Index Number	Part Number	Code	NOMENCLATURE	No. Req.	SERIAL NUMBERS AFFECTED
38-	20839	XY	DRAWING - Stabilator Trim Mechanism Installation		
	22678	Z	DRAWING - Stabilator Trim Mechanism Installation		
	24868	V	DRAWING - Stabilator Trim Mechanism Installation		
	20955	X	DRAWING - Control System Installation		24-1 to 24-102 inclusive
	21553	XY	DRAWING - Control System Installation		24-103 to 24-2843 inclusive
	23029	Y	DRAWING - Control System Installation		24-2844 and up
	21553	X	DRAWING - Control System Installation		24-2844 and up
	23014	Z	DRAWING - Control System Installation		
	24869	BV	DRAWING - Control System Installation		
	25402	V	DRAWING - Control System Installation		24-4247, 24-4300 and up
-1	20838-00	VXY	ARM ASSEMBLY - Stabilator tab actuator	1	
	30176-03	Z	ARM ASSEMBLY - Stabilator tab actuator	1	
-2	452 374	VXY	BEARING - Oilite (F-427)	2	
	452 385	Z	BEARING - Oilite (FF-520-15)	2	
-3	452 383		BEARING - Rod end (24166-00)	1	
-4	20836-00	VXY	BELLCRANK ASSEMBLY - Stabilator tab control	1	
	22887-00	Z	BELLCRANK ASSEMBLY - Stabilator tab control	1	
-4a	21831-03	Z	BEARING - Bellcrank assembly	2	
-5	20834-00	AXY	STOP - Trim tab screw, upper	1	24-1 to 24-3650 inclusive
	20834-05	VXY	STOP - Trim tab screw, upper	1	24-3651 and up
	20834-05	Z	STOP - Trim tab screw, upper	1	
-6	20834-02	AXY	STOP - Trim tab screw, lower	1	24-1 to 24-2843 inclusive
	20834-03	AY	STOP - Trim tab screw, lower	1	24-2844 to 24-3650 inclusive
	20834-02	AX	STOP - Trim tab screw, lower	1	24-2844 to 24-3650 inclusive
	20834-06	X	STOP - Trim tab screw, lower	1	24-3651 and up
	20834-07	VY	STOP - Trim tab screw, lower	1	24-3651 and up
	20834-05	Z	STOP - Trim tab screw, lower	1	
7	20800-00		DRUM - Stabilator trim tab control	1	
-8	20840-03		BRACKET ASSEMBLY - Control cable drum	1	
-9	452 376		BEARING - Oilite (F-586)	2	
-10	756 217	AX	SCREW AND STOP ASSEMBLY - Stabilator trim tab	1	24-1 to 24-3650 inclusive
	756 217	AY	SCREW AND STOP ASSEMBLY - Stabilator trim tab	1	24-105 to 24-2843 inclusive
	756 218	AY	SCREW AND STOP ASSEMBLY - Stabilator trim tab	1	24-2844 to 24-3650 inclusive
	20802-04	VXY	SCREW - Stabilator trim tab control	1	24-3651 and up
	22864-00	Z	SCREW - Stabilator trim tab control	1	
-11	80022-96	XY	BUSHING	2	
-12	20485-02	XY	BRACKET ASSEMBLY - Stabilator trim cable pulley	2	
	23452-00	VZ	BRACKET ASSEMBLY - Stabilator trim cable pulley, left	1	
	23452-01	VZ	BRACKET ASSEMBLY - Stabilator trim cable pulley, right	1	
-13	17089-00		PIN	1	
-14	21049-00	VXY	STOP - Bolt	2	
-15	14843-47	VXY	BUSHING	2	

A - If screw and stop assembly 756 217 or 756 218 which incorporates a clevis pin for the stop attachment has been installed, order part for serial numbers 24-3651 and up.
B - Used on PA-24-260 with serial numbers 24-3642, 24-4000 to 24-4246, 24-4248 to 24-4299 inclusive.
V - Used on PA-24-260 airplanes only.
X - Used on PA-24-180 airplanes only.
Y - Used on PA-24-250 airplanes only.
Z - Used on PA-24-400 airplanes only.

Figure and Index Number	Part Number	Code	NOMENCLATURE	No. Req.	SERIAL NUMBERS AFFECTED
38-16	20560-00	VXY	CLIP - Stabilator tab control, left	1	
	20560-01	VXY	CLIP - Stabilator tab control, right	1	
	16722-02	Z	CLIP - Stabilator tab control, left	1	
	16722-03	Z	CLIP - Stabilator tab control, right	1	
-17	14976-42	VXY	BUSHING	1	
	14976-63	Z	BUSHING	1	
-18	14843-26	VXY	BUSHING	2	
-19	481 621	C	PULLEY - (AN210-1B)	2	
	20534-00	V	PULLEY - Stabilator trim	2	24-4247, 24-4300 and up
-20	20946-00		CABLE ASSEMBLY - Stabilator trim tab control, rear	1	
-21	21093-00	XY	CABLE ASSEMBLY - Stabilator trim tab control, front	1	
	21093-02	BVZ	CABLE ASSEMBLY - Stabilator trim tab control, front	1	
-22	14300-30	A	CABLE ASSEMBLY - Stabilator trim tab control	1	
-23	452 019		BARREL - Turnbuckle (AN155-5S)	2	
-24	17442-03	XY	TEE ASSEMBLY - Stabilator trim indicator	1	
-25	480 682		PIN - Roll (#59-022-094-0750)	1	
	480 707	AVZ	PIN - Roll (#59-022-094-1000)	1	
-26	20623-00		PLATE - Rub	4	24-1 to 24-102 inclusive
-27	14843-33	XY	BUSHING	1	
-28	14843-34	VXY	BUSHING	3	
-29	20534-00	VXY	PULLEY	3	
-30	14183-03	XY	ROD - Threaded	1	
-31	86092-66	XY	ROD - Cable guard	2	
-32	80421-00		PULLEY	1	
-33	80012-04		WASHER	1	
-34	80122-18		WASHER	2	
-35	20907-00		PULLEY - Stabilator trim crank (Aluminum)	1	
	25048-00	AZ	PULLEY - Stabilator trim crank (Plastic)	1	
	25048-02		PULLEY - Stabilator trim crank (Plastic)	1	
-36	20908-00		STEM - Stabilator trim crank	1	
-37	464 023		HANDLE ASSEMBLY - Stabilator trim crank	1	
-38	20905-00		CHANNEL ASSEMBLY - Stabilator trim pulley	1	
-39	151 310		WIRE - Indicator, stainless steel	20'	
-40	481 621	XY	PULLEY - Trim cable (AN210-1B)	2	
	20534-00	VZ	PULLEY - Trim cable	2	
-41	24026-00	VZ	INDICATOR - Stabilator trim	1	
-42	24666-00	Z	PLACARD - Stabilator trim indicator	1	
	24875-00	V	PLACARD - Stabilator trim indicator	1	
-43	24023-02	VZ	BRACKET - Stabilator indicator tube	1	
-44	24024-03	VZ	BRACKET - Stabilator indicator	1	
-45	24025-02	VZ	TUBE - Stabilator indicator	1	
-46	20534-00		PULLEY	2	

A - Used when electric trim is installed.
B - If electric trim is installed and 6 3/4" splice cable is not installed, order Part No. 14300-30 also.
C - Used on PA-24-180, PA-24-250 and PA-24-260 with serial numbers 24-1 to 24-4246 inclusive, 24-4248 to 24-4299 inclusive, PA-24-400 with serial numbers 26-2 and up.
V - Used on PA-24-260 airplanes only.
X - Used on PA-24-180 airplanes only.
Y - Used on PA-24-250 airplanes only.
Z - Used on PA-24-400 airplanes only.

Figure and Index Number	Part Number	Code	NOMENCLATURE	No. Req.	SERIAL NUMBERS AFFECTED
38-47	20903-00	XY	BRACKET - Pulley	2	
	24813-00	VZ	BRACKET - Pulley	2	
-48	23954-00	VZ	TUBE - Cable guide	3	
-49	400 106	VXY	BOLT - (AN4-11)	1	
	402 310	Z	BOLT - (AN174-12)	1	
	407 565	Z	WASHER - (AN960-416)	1	
	404 101		NUT - (AN310-4)	1	
	424 051		PIN - Cotter (AN380-2-2)	1	
-50	401 312	VXY	BOLT - (AN4-12A)	1	
	402 311	Z	BOLT - (AN174-12A)	1	
	407 565	Z	WASHER - (AN960-416)	1	
	404 888		NUT - (MS20365-428C)	1	
-51	401 270	VXY	BOLT - (AN3-11A)	1	
	402 315	Z	BOLT - (AN174-15)	1	
	407 565	Z	WASHER - (AN960-416)	1	
	404 835	VXY	NUT - (MS20364-1032C)	1	
	404 101	Z	NUT - (AN310-4)	1	
	424 051	Z	PIN - Cotter (AN380-2-2)	1	
-52	472 028	VZ	BULB - Indicator (#327-28V)	1	24-3642, 24-4000 to 24-4472 incl., 26-2 and up
	472 054	V	BULB - Indicator (#330-14V)	1	24-4473 and up
-53	484 308	VZ	RECEPTACLE - Indicator bulb (#GB-5952-3LH-C-14)	1	
-54	42891-00		SPRING	1	

V - Used on PA-24-260 airplanes only.
X - Used on PA-24-180 airplanes only.
Y - Used on PA-24-250 airplanes only.
Z - Used on PA-24-400 airplanes only.

When ordering, always specify Part Number, Description and Serial Number of Aircraft

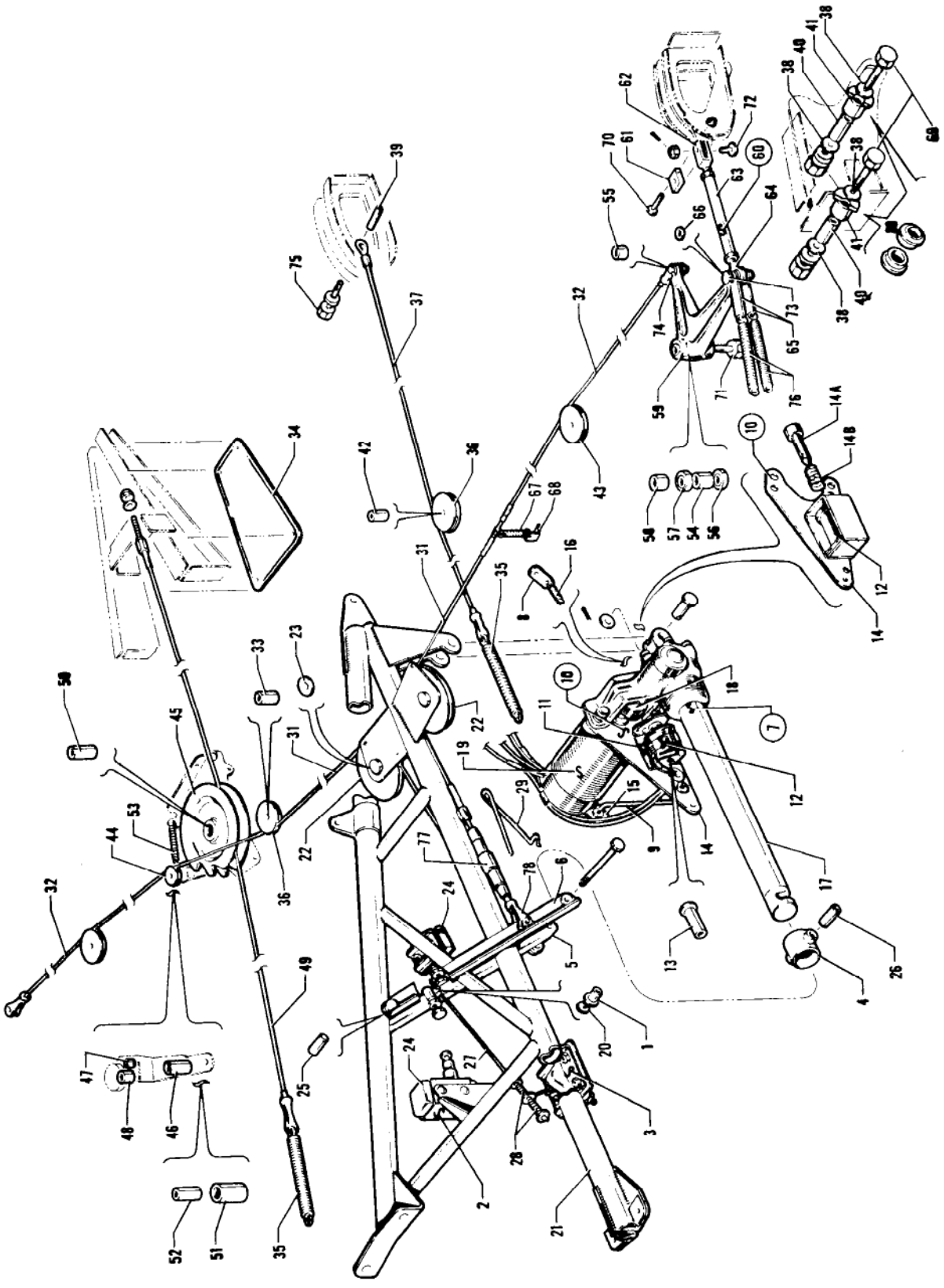

Figure 39. Flap Control Mechanism Installation
(Serial Nos. 24-2844 and up)

Figure and Index Number	Part Number	Code	NOMENCLATURE	No. Req.	SERIAL NUMBERS AFFECTED
39-	23008	C	DRAWING - Flap Actuating Mechanism Installation		
	25351	V	DRAWING - Flap Actuating Mechanism Installation		24-4247, 24-4300 and up
-1	23225-00		BUSHING	1	
-2	17807-00		GUARD - Limit switch	1	
-3	22663-00		UNIT ASSEMBLY - Flap position indicator sending	1	
-4	22688-00		BRACKET ASSEMBLY - Transmission connector	1	
-5	22694-00	C	ARM ASSEMBLY - Flap control, right	1	
	22694-03	V	ARM ASSEMBLY - Flap control, right	1	24-4247, 24-4300 and up
-6	22695-00	C	ARM ASSEMBLY - Flap control, left	1	
	22695-03	V	ARM ASSEMBLY - Flap control, left	1	24-4247, 24-4300 and up
-7	23013-00		TRANSMISSION ASSEMBLY - Flap control	1	
-8	21415-00		LINK - Spring attachment	1	24-2844 to 24-4061 inclusive
-9	21418-02		ROD - Motor brake support	1	
-10	23042-00	A	BRAKE AND ARM ASSEMBLY - (Complete)	1	24-2844 to 24-4061 inclusive
	24948-00		BRAKE AND ARM ASSEMBLY - (Complete)	1	24-4062 and up
-11	21401-00	A	BRAKE ASSEMBLY - Flap motor	1	24-2844 to 24-4061 inclusive
-12	21419-00	A	COIL ASSEMBLY - Flap motor brake	1	24-2844 to 24-4061 inclusive
	487 154	B	SOLENOID - Flap motor brake	1	24-4062 to 24-4786 inclusive
	43988-02		SOLENOID - Flap motor brake	1	24-4787 and up
-13	21404-00	A	CORE - Motor brake coil	1	24-2844 to 24-4061 inclusive
-14	23046-00	A	ARM - Spring attachment	1	24-2844 to 24-4061 inclusive
	24932-00	B	ARM - Spring attachment	1	24-4062 and up
-14a	24933-00	B	PLUNGER - Brake solenoid	1	24-4062 and up
-14b	83302-61	B	SPRING - Solenoid plunger	1	24-4062 and up
-15	60054-18		LINK - Spring attachment	1	
-16	83302-42		SPRING - Coil	1	24-2844 to 24-4061 inclusive
-17	25720-04		TRANSMISSION ASSEMBLY	1	
-18	757 833		COUPLING	1	
-19	475 192		MOTOR ASSEMBLY - (#MO721082A)	1	
-20	415 769		SCREW - Machine (AN515-8-5) (With Nyloc insert)	1	
-21	22697-00	Y	SUPPORT ASSEMBLY - Wing main spar center	1	
	22697-07	DV	SUPPORT ASSEMBLY - Wing main spar center	1	
	22697-10	V	SUPPORT ASSEMBLY - Wing main spar center	1	24-4247, 24-4300 and up
-22	41001-03		PULLEY	2	
-23	80122-70		WASHER	4	
-24	487 805		SWITCH - (#BZ-7RQ31T1-PA15)	2	
-25	14976-80		BUSHING	1	
-26	14976-81		BUSHING	1	
-27	23226-00		ROD	1	
-28	83302-50		SPRING - Coil	2	

A - Not available. Secure complete brake and arm assembly, Part No. 24948-00.
B - Used on airplanes with serial numbers 24-2844 to 24-4061 inclusive if plunger type brake and arm assembly, Part No. 24948-00 has been installed.
C - Used on PA-24-250 with serial numbers 24-2844 and up, PA-24-260 with serial numbers 24-3642, 24-4000 to 24-4246, 24-4248 to 24-4299 inclusive.
D - Used on PA-24-260 with serial numbers 24-3642, 24-4000 to 24-4246, 24-4248 to 24-4299 inclusive.
V - Used on PA-24-260 airplanes only.
Y - Used on PA-24-250 airplanes only.

When ordering, always specify Part Number, Description and Serial Number of Aircraft

Figure and Index Number	Part Number	Code	NOMENCLATURE	No. Req.	SERIAL NUMBERS AFFECTED
39-29	454 867	V	CLIP - (NAS651-16S)	4	24-4247, 24-4300 and up
-30	26343-00	V	ROLLER - (Nylon)	24	24-4749 and up
-31	22886-02	A	CABLE ASSEMBLY - Control (23 3/4" L)	2	
-32	22886-03	A	CABLE ASSEMBLY - Control (57" L)	2	
	22886-04	V	CABLE ASSEMBLY - Control, flap mechanism to flap bellcrank (83 1/2" L)	2	24-4247, 24-4300 and up
-33	82732-68		BUSHING	1	
-34	23087-00		PLATE - Flap access	1	
-35	83302-40		SPRING	2	
-36	80421-00		PULLEY - Flap control cable	2	
-37	20944-08		CABLE ASSEMBLY - Flap control cable	1	
-38	19513-37		WASHER	24	24-2844 to 24-4748 inclusive
-39	14976-83		BUSHING	1	
-40	14976-72		BUSHING	12	
-41	14976-73		BUSHING - (Steel)	12	24-2844 to 24-4748 inclusive
-42	14976-82		BUSHING	1	
-43	481 623		PULLEY - (AN210-3B)	2	
-44	22793-00		PULLEY - Step lock release cable	1	
-45	22627-00		PULLEY - Step lock release cable	1	
-46	61402-32		BUSHING	1	
-47	61402-35		BUSHING	1	
-48	61402-36		BUSHING	1	
-49	23117-00		CABLE ASSEMBLY - Flap control	1	
-50	61402-29		BUSHING	1	
-51	61402-34		BUSHING	1	
-52	61402-43		BUSHING	1	
-53	83302-37		SPRING - Coil	1	
-54	14976-74		BUSHING	1	
-55	82732-98		BUSHING	1	
-56	452 344		BEARING - (#5035)	1	
-57	452 361		BEARING - (#B-86)	1	
-58	452 362		BEARING - Inner race #1RA5	1	
-59	22740-00		BELLCRANK - Flap	1	
-60	22855-00		ROD ASSEMBLY - Flap control	1	
-61	22852-00		LINK - Flap control rod	1	
-62	22853-00		CLEVIS - Flap control rod	1	
-63	22854-00		ROD - Flap control	1	
-64	452 356		ROD END BEARING - (#HMX-4M)	1	24-2844 to 24-3530 inclusive
	452 412		ROD END BEARING - (#HMX-4S)	1	24-3531 and up
-65	60054-17		LINK	2	
-66	61402-44		BUSHING	2	
-67	487 291		SPRING - (#180C 2 1/2)	1	
-68	22878-00		CLIP	1	
-69	401 270		BOLT - (AN3-11A)	4	
	407 564		WASHER - (AN960-10)	4	
	404 887		NUT - (MS20365-1032C)	4	
-70	400 057		BOLT - (AN3-12)	1	
	404 100		NUT - (AN310-3)	1	
	424 051		COTTER PIN - (AN380-2-2)	1	

A - Used on PA-24-250 with serial numbers 24-2844 and up, PA-24-260 with serial numbers 24-3642, 24-4000 to 24-4246, 24-4248 to 24-4299 inclusive.
V - Used on PA-24-260 airplanes only.

When ordering, always specify Part Number, Description and Serial Number of Aircraft

Figure and Index Number	Part Number	Code	NOMENCLATURE	No. Req.	SERIAL NUMBERS AFFECTED
39-71	401 359		BOLT - (AN5-20A)	2	
-72	400 055		BOLT - (AN3-10)	2	
	404 100		NUT - (AN310-3)	2	
	424 051		COTTER PIN - (AN380-2-2)	2	
-73	400 008		BOLT - (AN4-12A)	2	
	404 888		NUT - (AN365-428)	2	
-74	400 675		BOLT - (AN23-13)	2	
	407 564		WASHER - (AN960-10)	2	
	404 392		NUT - (AN320-3)	2	
	424 051		COTTER PIN - (AN380-2-2)	2	
-75	401 273		BOLT - (AN3-14A)	1	
	407 564		WASHER - (AN960-10)	1	
-76	83302-40		SPRING - Bellcrank	2	24-2844 to 24-3444 inclusive
	83302-54		SPRING - Bellcrank	2	24-3445 and up
-77	452 011	V	BARREL - Turnbuckle (NAS649B-32S)	2	24-4247, 24-4300 and up
-78	461 133	V	FORK - (NAS645-32RS)	2	24-4247, 24-4300 and up

V - Used on PA-24-260 airplanes only.

When ordering, always specify Part Number, Description and Serial Number of Aircraft

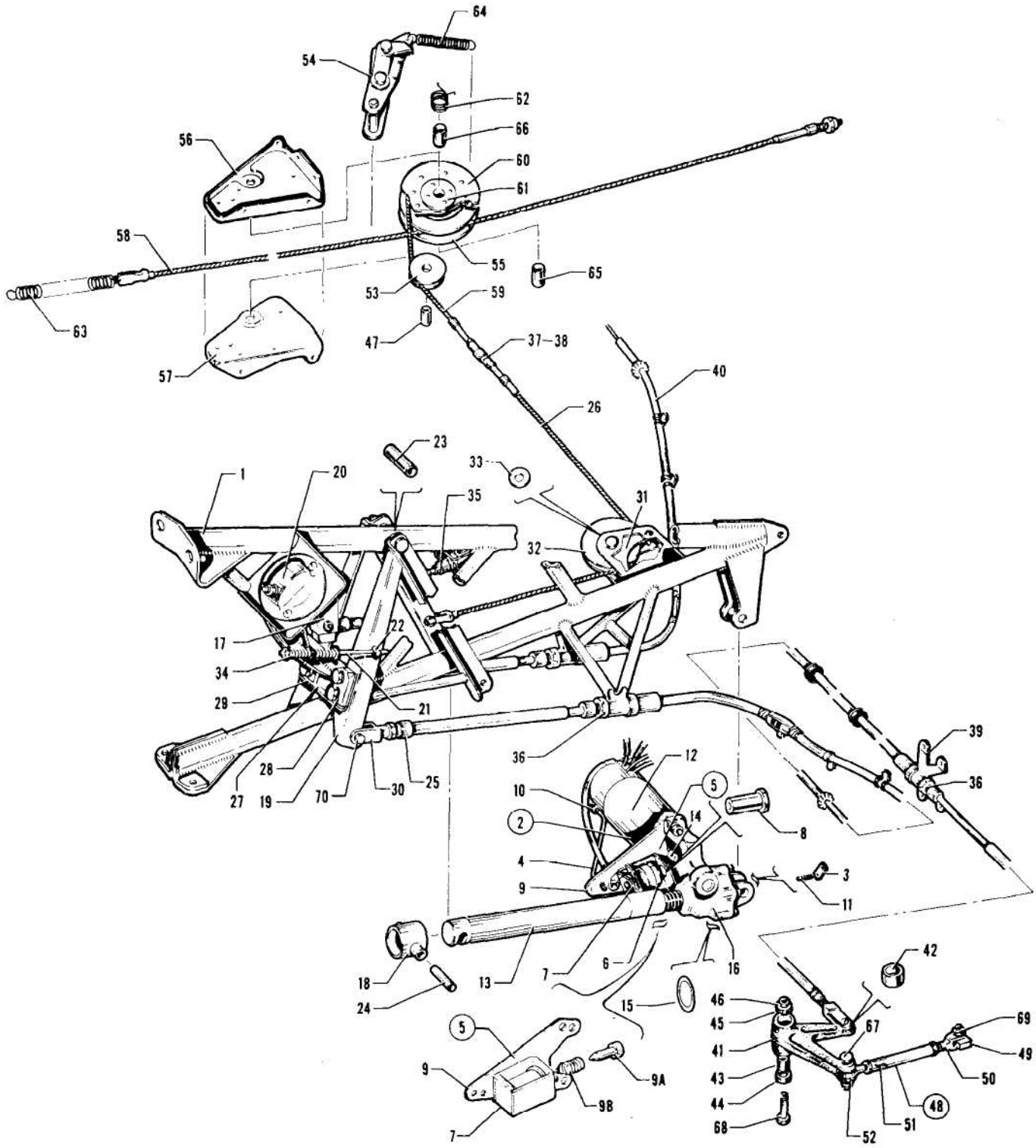

Figure 40. Flap Control Mechanism Installation

Figure and Index Number	Part Number	Code	NOMENCLATURE	No. Req.	SERIAL NUMBERS AFFECTED
40-	24600		DRAWING - Flap Actuating Mechanism Installation		
-1	24590-00		SUPPORT ASSEMBLY - Wing main spar center	1	26-2 to 26-124 inclusive
	24590-11		SUPPORT ASSEMBLY - Wing main spar center	1	26-125 and up
-2	23013-00		TRANSMISSION ASSEMBLY - Flap control	1	
-3	21415-00		LINK - Spring attachment	1	
-4	21418-02		ROD - Motor brake support	1	
-5	23042-00	A	BRAKE AND ARM ASSEMBLY - (Complete)	1	
	24948-00	B	BRAKE AND ARM ASSEMBLY - (Complete)	1	
-6	21401-00	A	BRAKE ASSEMBLY - Flap motor	1	
-7	21419-00	A	COIL ASSEMBLY - Flap motor brake	1	
	487 154	B	SOLENOID - Flap motor brake	1	
-8	21404-00	A	CORE - Flap motor brake coil	1	
-9	23046-00		ARM - Spring attachment	1	
	24932-00	B	ARM - Spring attachment	1	
-9a	24933-00	B	PLUNGER - Brake solenoid	1	
-9b	83302-61	B	SPRING - Solenoid plunger	1	
-10	60054-18		LINK - Spring attachment	1	
-11	83302-42		SPRING - Coil	1	
-12	475 192		MOTOR ASSEMBLY - (#M0721082A)	1	
-13	489 375		TRANSMISSION ASSEMBLY - (#1010001) (24390-00)	1	
-14	751 517		COUPLING - (#JB11918)	1	
-15	751 843		GASKET - (#JB12046)	1	
-16	751 518		HOUSING - (#1010264)	1	
-17	17807-00		BRACKET - Limit switch	2	
-18	22688-00		BRACKET ASSEMBLY - Transmission connector	1	
-19	24575-00		ARM ASSEMBLY - Flap control, left	1	
	24575-01		ARM ASSEMBLY - Flap control, right	1	
-20	24587-00		UNIT ASSEMBLY - Flap position indicator sending	1	
-21	23226-02		ROD	1	
-22	23225-00		BUSHING	1	
-23	14976-80		BUSHING	1	
-24	14976-81		BUSHING	1	
-25	24584-00		SPACER	2	
-26	24592-00		CABLE ASSEMBLY - Control	1	
-27	24597-00		BRACKET - Flap control arm guide	1	
-28	24598-02		BLOCK - Flap control arm guide	1	
-29	24598-03		BLOCK - Flap control arm guide	1	
-30	24599-00		CLEVIS - Flap control	4	
-31	24604-00		GUARD - Flap cable pulley	1	
-32	41001-03		PULLEY - Flap cable	1	
-33	80122-70		WASHER	2	
-34	83302-50		SPRING - Coil	2	
-35	487 805		SWITCH - (#BZ-7RQ31T1-PA15)	2	
-36	24585-00		NUT - Flap retraction cable	4	
-37	454 867		CLIP - Turnbuckle safety (NAS651-16S)	2	
-38	452 015		BARREL - Turnbuckle (NAS649-B8S)	1	
-39	24576-00		BRACKET ASSEMBLY - Flap control support	2	
-40	494 660		WIRE AND CONDUIT ASSEMBLY - (#40952-1)	2	
-41	22740-00		BELLCRANK - Flap	2	

A - Not available, secure complete brake and arm assembly Part No. 24948-00.
B - Used if plunger type brake and arm assembly Part No. 24948-00 has been installed.

When ordering, always specify Part Number, Description and Serial Number of Aircraft

Figure and Index Number	Part Number	Code	NOMENCLATURE	No. Req.	SERIAL NUMBERS AFFECTED
40-42	82732-98		BUSHING - Bellcrank	1	
-43	14976-74		BUSHING - Bellcrank	1	
-44	452 344		BEARING - (#5035)	1	
-45	452 361		BEARING - (#B-86)	1	
-46	452 362		BEARING - Inner race (1RA-5)	1	
-47	82732-68		BUSHING	1	
-48	22855-00		ROD ASSEMBLY - Flap control	2	
-49	22852-00		LINK - Flap control rod	1	
-50	22853-00		CLEVIS - Flap control rod	1	
-51	22854-00		ROD - Flap control	1	
-52	452 412		BEARING - Rod end (#HMX-45)	1	
-53	80421-00		PULLEY	1	
-54	24608-00		LINK ASSEMBLY - Step lock	1	
-55	22627-02		PULLEY - Step lock	1	
-56	22728-02		BRACKET - Step lock support, upper	1	
-57	22729-00		BRACKET - Step lock support, lower	1	
-58	23117-00		CABLE ASSEMBLY - Flap control	1	
-59	24588-00		CABLE ASSEMBLY - Flap control	1	
-60	24605-00		CAM ASSEMBLY - Step lock	1	
-61	24596-00		BUSHING - Step lock	1	
-62	24607-00		SPRING - Step lock	1	
-63	83302-40		SPRING	1	
-64	83302-37		SPRING	1	
-65	61402-29		BUSHING	1	
-66	61402-80		BUSHING	1	
-67	401 311		BOLT - (AN4-11A)	2	
	407 585		WASHER - (AN960-416L)	2	
	407 565		WASHER - (AN960-416)	2	
	404 888		NUT - (AN365-428)	2	
-68	401 359		BOLT - (AN5-20A)	2	
-69	400 055		BOLT - (AN3-10)	2	
	407 584		WASHER - (AN960-10L)	2	
	404 100		NUT - (AN310-3)	2	
	424 051		PIN - Cotter (AN380-2-2)	2	
-70	400 677		BOLT - (AN23-15)	2	
	407 564		WASHER - (AN960-10)	2	
	404 392		NUT - (AN320-3)	2	
	424 051		PIN - Cotter (AN380-2-2)	2	

When ordering, always specify Part Number, Description and Serial Number of Aircraft

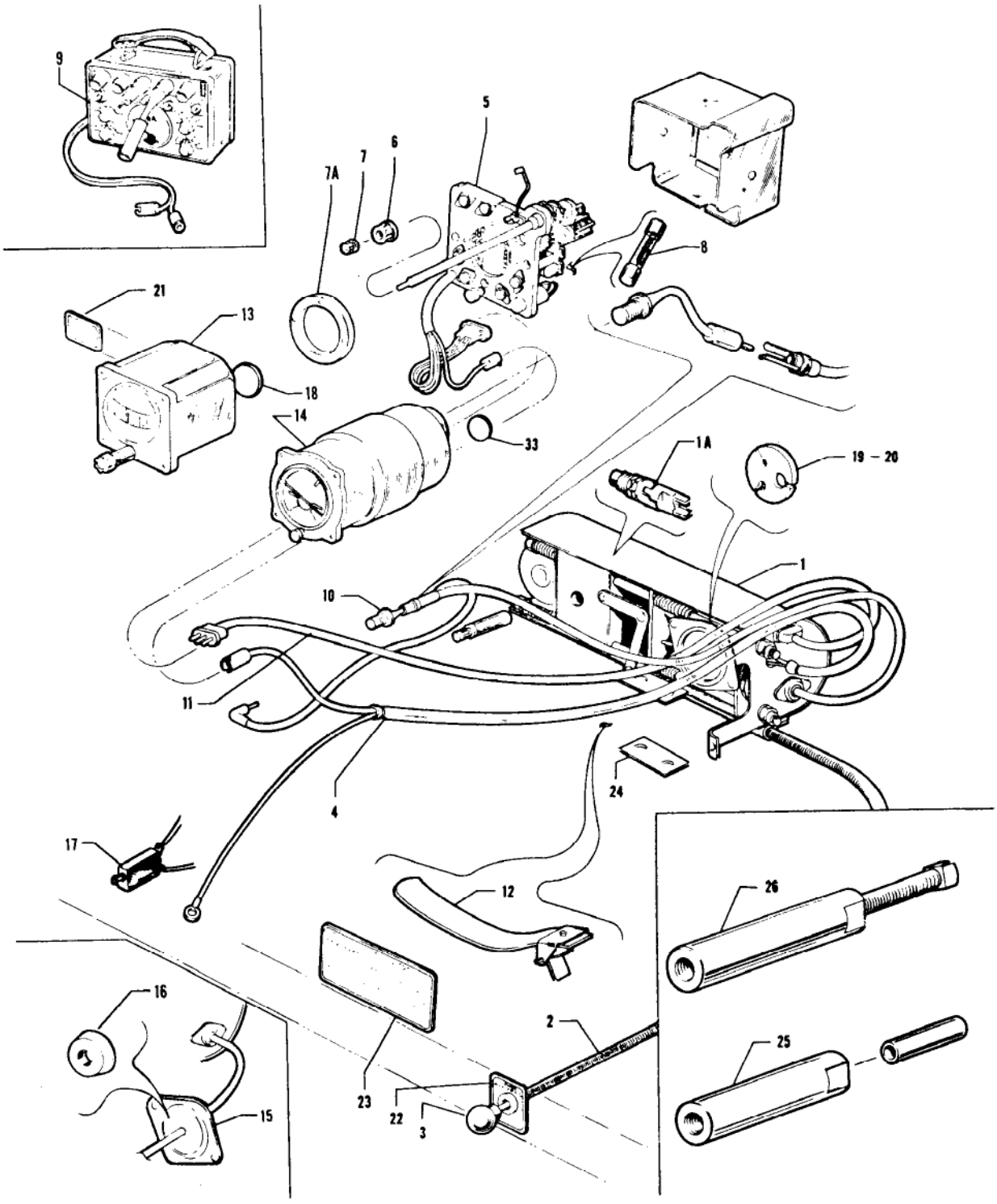

Figure 41. AutoControl I Installation

Figure and Index Number	Part Number	Code	NOMENCLATURE	No. Req.	SERIAL NUMBERS AFFECTED
41-	21780	A	DRAWING - AutoControl I Installation		
	22465	C	DRAWING - AutoControl I Installation		
-1	753 501		MOTOR ASSEMBLY - Roll servo	1	
-1a	752 967		SWITCH - Roll servo (40518)	1	
-2	751 519		CABLE ASSEMBLY - Control	1	
-3	754 211		KNOB - Engage control cable	1	
-4	751 523		CABLE ASSEMBLY - Power supply	1	
-5	751 232		AMPLIFIER - (Complete) (1X217)	1	
-6	754 209		KNOB - (L-R turn) (36A37)	1	
-7	754 210		KNOB - Turn trim (36A39)	1	
-7a	752 955		RING - Spacer (42A63)	1	
-8	751 783		FUSE - 10 AMP (AGC-10)	1	
-9	751 412		TEST EQUIPMENT	1	
-10	751 521		CABLE ASSEMBLY - (Gyros to servo)	1	
-11	751 525		CABLE ASSEMBLY - (Amplifier to servo)	1	
-12	487 607		STRAP - Cable support	2	
-13	450 725	DE	INSTRUMENT - Directional gyro (52B15)	1	
	450 794	BE	INSTRUMENT - Directional gyro (30996)	1	
-14	450 724		INSTRUMENT - Gyro horizon	1	
-15	22103-02		PLATE - Firewall seal grommet	2	24-2202 to 24-3471 inclusive
-16	22104-04		GROMMET - Firewall seal	2	24-2202 to 24-3471 inclusive
-17	454 664		CIRCUIT PROTECTOR - (#3003)	1	
-18	754 825		PAD - AutoControl instrument pad (2 per instrument)	AR	
-19	21249-17		DISC - Firewall seal, forward	1	
-20	21249-16		DISC - Firewall seal, rear	1	
-21	19563-00	D	PLACARD - Turn control	1	
	19991-00	B	PLACARD - Turn control	1	
-22	19562-00		PLACARD - Control engage	1	
-23	19561-00	D	PLACARD - Operation	1	
	19993-00	B	PLACARD - Operation	1	
-24	21782-00		PLATE - Chafing	1	24-1 to 24-102 inclusive
-25	754 212		KIT - Pilot tool	1	
-26	21827-00		TOOL - Servo shaft installation	1	

A - Used on airplanes with serial numbers 24-1 to 24-2174 inclusive, 24-2176 to 24-2298 inclusive.
B - Used when course selector is installed.
C - Used on airplanes with serial numbers 24-2175, 24-2298 to 24-3471 inclusive.
D - Used when course selector is not installed.
E - No longer available.

When ordering, always specify Part Number, Description and Serial Number of Aircraft

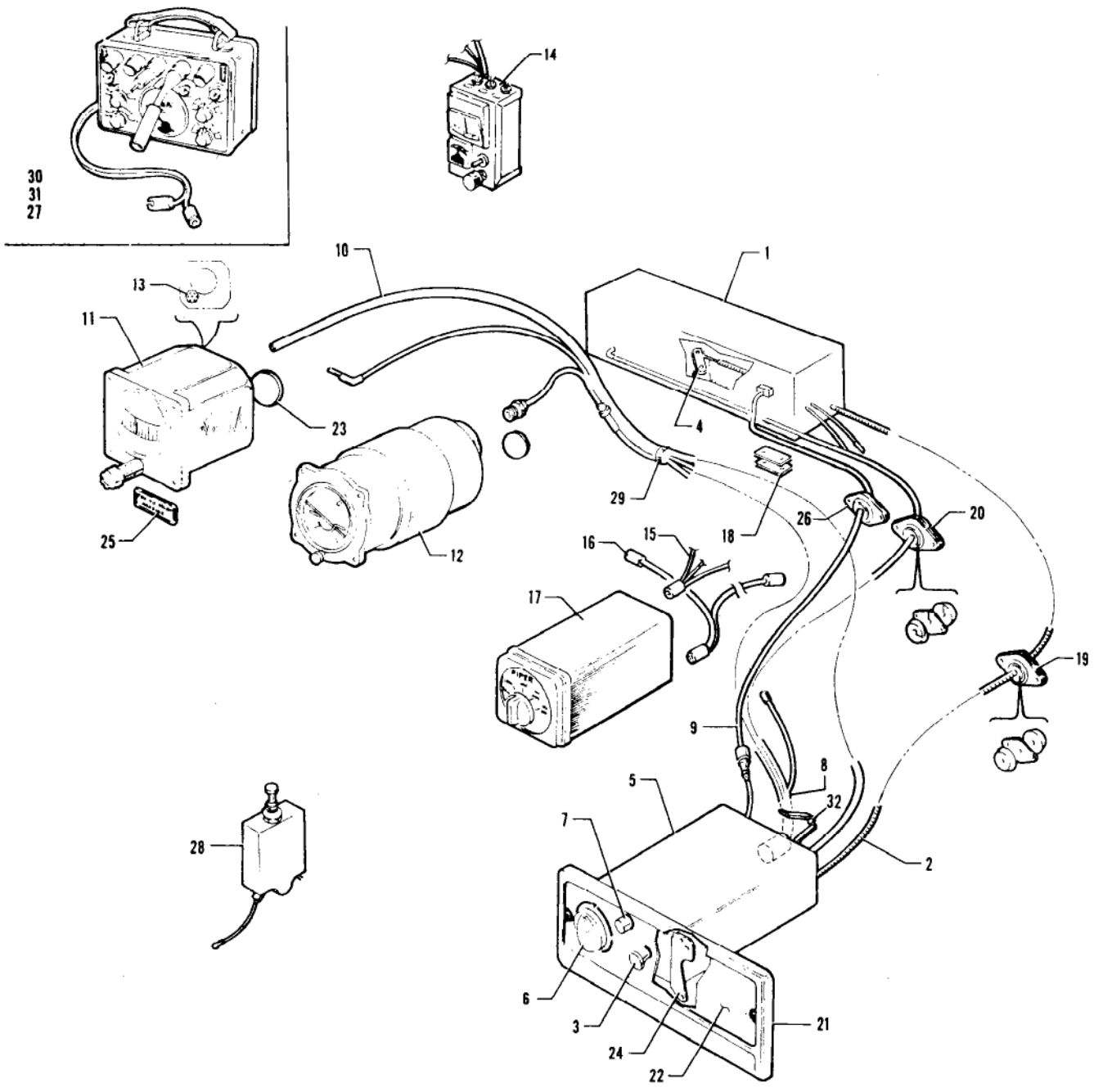

Figure 42. AutoControl II Installation

Figure and Index Number	Part Number	Code	NOMENCLATURE	No. Req.	SERIAL NUMBERS AFFECTED
42-	23619		DRAWING - AutoControl II Installation		
	31668	B	DRAWING - AutoControl II Schematic		
	31669	C	DRAWING - AutoControl II Schematic		
-1	753 634		MOTOR ASSEMBLY - Roll servo (1X221-E-CO)	1	
-2	753 870		CABLE ASSEMBLY - Engage control (30A139-34)	1	
-3	756 716		KNOB - Engage control cable (36S92)	1	
-4	752 333		LEVER - Engage (30A83)	1	
-5	753 877	F	CONSOLE - Amplifier assembly (1X214E)	1	
	751 262	A	CONSOLE - Amplifier assembly (1X214E-3)	1	
-6	754 366		KNOB - Turn and trim (36A77)	1	
-7	756 720		BUTTON - Heading lock (36S93)	1	
-8	751 954		HARNESS ASSEMBLY - (30S116-1)	1	
-9	753 878	XY	CABLE ASSEMBLY - Servo motor (30A88)	2	
	753 878	Z	CABLE ASSEMBLY - Servo motor	2	26-2 to 26-73 inclusive
	24233-00	Z	CABLE ASSEMBLY - Servo motor	1	26-74 and up
	24233-00	V	CABLE ASSEMBLY - Servo motor	1	
-10	753 036		HOSE - Air, amplifier to directional gyro (47A147-24)	1	
-11	450 795	DHXY	INSTRUMENT - Directional gyro (52B15-E)	1	
	550 640	DHVZ	INSTRUMENT - Directional gyro (30987-02)	1	
	550 643	EHVZ	INSTRUMENT - Directional gyro (31058-02)	1	
	550 626	BEGZ	INSTRUMENT - Directional gyro (31324-00) (3 inch)	1	
	550 626	BEGV	INSTRUMENT - Directional gyro (31324-00) (3 inch)	1	24-3642, 24-4000 to 24-4366 incl.
	550 644	CEGZ	INSTRUMENT - Directional gyro (31324-00) (3 inch)	1	
	550 644	CEGV	INSTRUMENT - Directional gyro (31324-00) (3 inch)	1	24-3642, 24-4000 to 24-4366 incl.
	25229-00	BEGV	INSTRUMENT - Directional gyro (52D61) (3 inch)	1	24-3642, 24-4000 to 24-4366 incl.
	550 779	BEGV	INSTRUMENT - Directional gyro (32169-00) (3 inch)	1	24-4367 and up
	550 778	CEGV	INSTRUMENT - Directional gyro (32168-00) (3 inch)	1	24-4367 and up
-12	450 724	HXY	INSTRUMENT - Gyro horizon (52B9)	1	
	550 642	HVZ	INSTRUMENT - Gyro horizon (31053-02)	1	
	550 645	GZ	INSTRUMENT - Gyro horizon (31694-00) (3 inch)	1	
	550 645	GV	INSTRUMENT - Gyro horizon (31694-00) (3 inch)	1	24-3642, 24-4000 to 24-4366 incl.
	25222-00	GV	INSTRUMENT - Gyro horizon (52D60) (3 inch)	1	24-3642, 24-4000 to 24-4366 incl.
	550 777	GV	INSTRUMENT - Gyro horizon (32167-00) (3 inch)	1	24-4367 and up
-13	751 272	C	ADAPTER - Directional gyro	1	
-14	756 873		KIT - Test, omni coupler	1	
-15	25008-00	C	CABLE ASSEMBLY - Omni coupler	1	
-16	753 932		CABLE ASSEMBLY - Omni coupler (30B152)	1	
-17	31671-00		COUPLER ASSEMBLY - Omni (1C292)	1	

A - Used when central air filter is installed.
B - Used when Omni Coupler is not installed.
C - Used when Omni Coupler is installed.
D - Used on AutoControl with "O" heading.
E - Used on AutoControl with course selector.
F - Used when central air filter is not installed.
G - See Figure 47 for positive identification of 3 inch instruments.
H - No longer available.
V - Used on PA-24-260 airplanes only.
X - Used on PA-24-180 airplanes only.
Y - Used on PA-24-250 airplanes only.
Z - Used on PA-24-400 airplanes only.

Figure and Index Number	Part Number	Code	NOMENCLATURE	No. Req.	SERIAL NUMBERS AFFECTED
42-18	21782-00		PLATE - Chafing	4	
-19	22104-03		GROMMET - Firewall seal	2	
	22105-03		GASKER - Firewall seal	1	
	481 062		HOLDER - Grommet (MT340)	2	
-20	22104-04		GROMMET - Firewall seal	2	
	22105-06		GASKET - Firewall seal	1	
	481 062		HOLDER - Grommet (MT340)	2	
-21	24197-02	B	PANEL ASSEMBLY - Instrument panel cover	1	
	24197-04	AC	PANEL ASSEMBLY - Instrument panel cover	1	
-22	23546-00	B	PLACARD - Operation instructions	1	
	24991-00	AC	PLACARD - Operation instructions	1	
-23	755 825		PAD - Gyro instrument filter (not used on 3 inch gyros)	AR	
-24	31045-00		BRACKET - Console mounting, left	1	
	31045-01		BRACKET - Console mounting, right	1	
-25	30279-00	A	PLACARD - Directional gyro operation	1	
-26	22104-12		GROMMET - Firewall seal	2	
	22105-09		GASKET - Firewall seal	1	
-27	753 880		CABLE - Test (30B116-1-T)	1	
-28	454 664		CIRCUIT PROTECTOR - (CB-3003)	1	
-29	487 608		STRAP ASSEMBLY - Cable support	2	
-30	751 412		TEST EQUIPMENT	1	
-31	756 737		ADAPTER - Test kit (66A44)	1	
-32	756 257		SPRING - Retainer (42A175)	1	

A - Used on AutoControl with course selector.
B - Used on AutoControl with "O" heading.
C - Used when 3 inch gyros are installed.

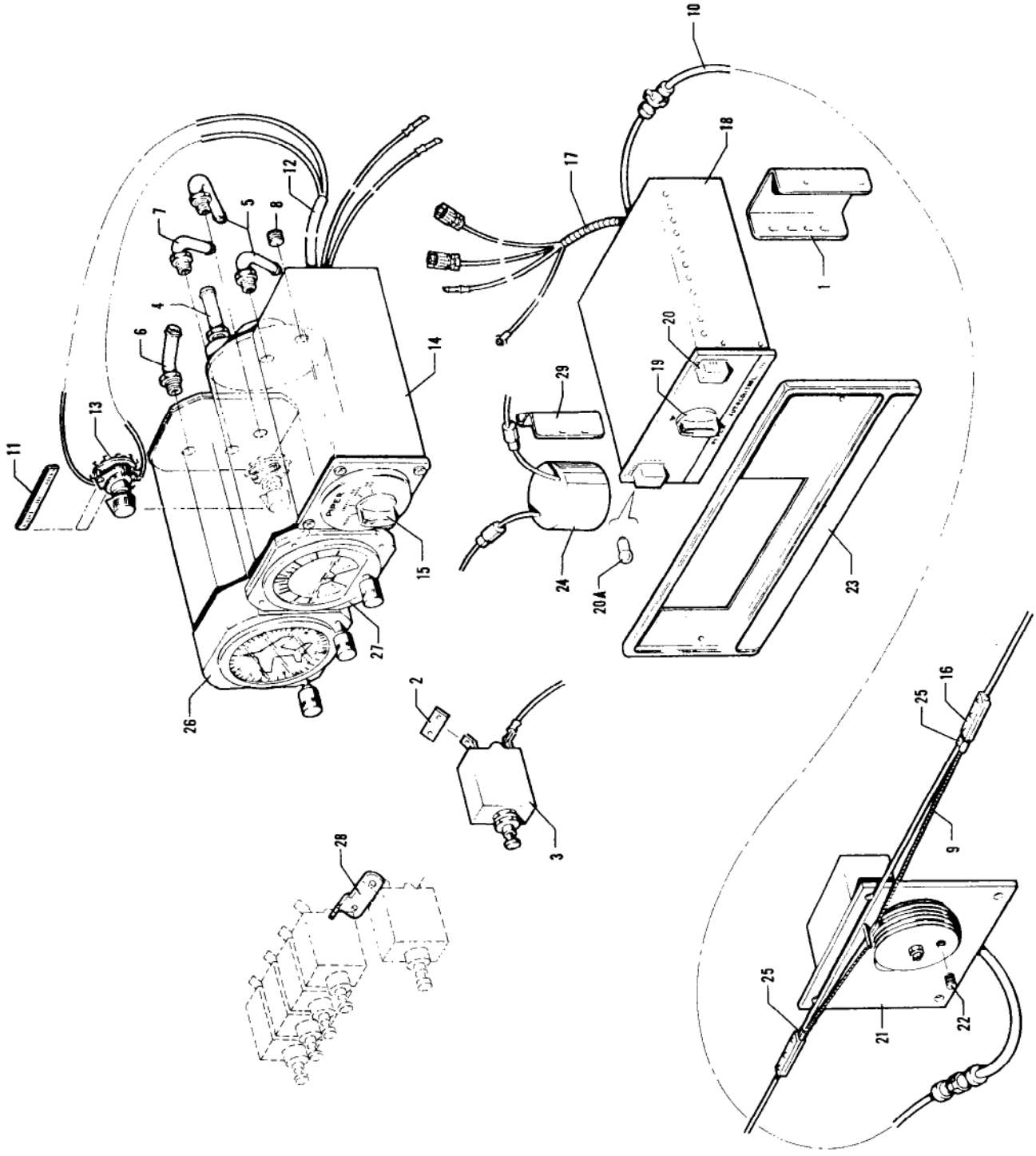

Figure 43. AutoControl III Installation

Figure and Index Number	Part Number	Code	NOMENCLATURE	No. Req.	SERIAL NUMBERS AFFECTED
43-	25676	A	DRAWING - AutoControl III Installation		
	26733		DRAWING - AutoControl III Installation		24-4783, 24-4804 and up
-1	25673-00	A	BRACKET - AutoControl console	1	
	26761-00		BRACKET - AutoControl console	1	24-4783, 24-4804 and up
-2	31506-02		BAR - Bus	2	
-3	454 656		PROTECTOR - Circuit (109-205-102)	1	
-4	451 939	A	ADAPTER - (#1K10-4-6)	1	
	451 862		ADAPTER - (AN840-4)	1	24-4783, 24-4804 and up
-5	458 945	A	ELBOW - (#1K1-4-6)	2	
	558 937		ELBOW - (#1K45-1)	2	24-4783, 24-4804 and up
-6	558 913	A	ELBOW - (#1K9-4-6)	1	
	558 937		ELBOW - (#1K46-1)	1	24-4783, 24-4804 and up
-7	458 948	A	ELBOW - (#1K1-2-4)	1	
	24712-02		PLUG - Pipe (581 212)	1	24-4783, 24-4804 and up
-8	24712-02	A	PLUG - Pipe (581 212)	1	
	558 937		ELBOW - (#1K46-1)	1	24-4783, 24-4804 and up
-9	25960-02		CABLE ASSEMBLY - Bridle	1	
-10	32203-02		CABLE ASSEMBLY - Servo extension	1	
-11	25743-00	A	PLACARD - Omni coupler (581 290)	1	
-12	25716-00	A	HARNESS ASSEMBLY - Omni coupler	1	
	32763-02		HARNESS ASSEMBLY - Omni coupler	1	24-4783, 24-4804 and up
-13	42038-02	A	SWITCH - Transmitter selector (487 928)	1	
	32550-00		SWITCH - Transmitter selector (487 942)	1	24-4783, 24-4804 and up
-14	551 114		COUPLER ASSEMBLY - Omni (25690-00)	1	
-15	757 052		KNOB - (36A98)	1	
-16	753 981		CLAMP ASSEMBLY - Bridle cable (42A173)	2	
-17	751 987		HARNESS ASSEMBLY - Amplifier (25662-00)	1	
-18	751 283		AMPLIFIER ASSEMBLY - Console (25664-00)	1	
-19	757 052		KNOB - (36A98)	1	
-20	757 581		SWITCH - Engage (40A22-4)	2	
-20a	753 496		BULB - Console (65S28)	2	
-21	753 721	A	SERVO ASSEMBLY - (1D363)	1	
	43909-04		SERVO ASSEMBLY - (1C363-1-161R)	1	24-4783, 24-4804 and up
-22	757 579		SET SCREW - Capstan (3S326)	1	
-23	23545-02	A	PANEL - Instrument panel cover	1	
-24	754 807		FILTER - Noise reducing (1A479)	1	
-25	26100-00		SLEEVE - Safety	2	
-26	550 778		INSTRUMENT - Directional gyro (32168-00) (3 inch)	1	
-27	550 557		INSTRUMENT - Gyro horizon (32172-02) (3 inch)	1	
-28	26789-00		BAR - Bus	1	24-4783, 24-4804 and up
-29	26762-00		BRACKET - AutoControl console	1	24-4783, 24-4804 and up

A - Used on airplanes with serial numbers 24-4567 to 24-4782 inclusive, 24-4784 to 24-4803 inclusive.

When ordering, always specify Part Number, Description and Serial Number of Aircraft

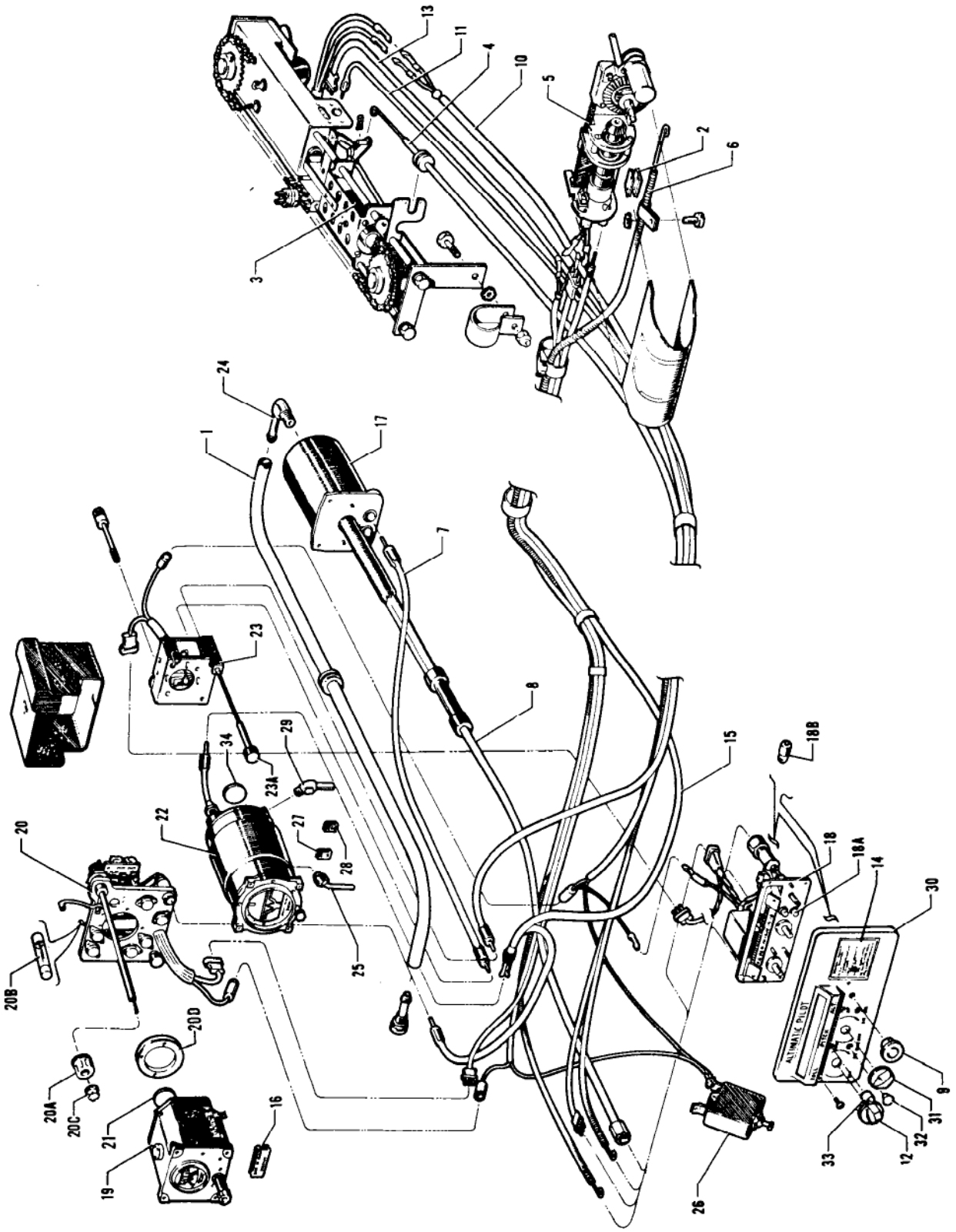

Figure 44. AltiMatic I Installation

Figure and Index Number	Part Number	Code	NOMENCLATURE	No. Req.	SERIAL NUMBERS AFFECTED
44-	22545		DRAWING - AltiMatic Pilot I Installation		
-1	20649-00		LINE ASSEMBLY - Altitude selector	1	
-2	21782-00		PLATE - Chafing	2	
-3	22532-00		MOTOR ASSEMBLY - Pitch servo (551 149)	1	
-4	753 843		CABLE - Pitch control	1	
-5	22531-00		MOTOR ASSEMBLY - Roll servo (551 148)	1	
-6	753 845		CABLE - Roll engage control	1	
-7	753 841		CABLE - Altitude selector	1	
-8	756 125		CABLE - Altitude selector, flexible shaft	1	
-9	754 368		KNOB - Altitude selector	1	
-10	753 838		CABLE - Power switch	1	
-11	753 858		CABLE - Pitch servo	1	
-12	754 366		KNOB - Roll engage	1	
-13	753 840		CABLE - Pitch control	1	
-14	22530-00		PLACARD - Operating instructions	1	
-15	751 521		CABLE - Roll assembly	1	
-16	30279-00		PLACARD - Heading selector	1	
-17	551 131		ALTITUDE SELECTOR - (756 133)	1	
-18	753 846		CONSOLE ASSEMBLY - Less knobs and face plate	1	
-18a	751 460		BULB - Effort light	2	
-18b	751 461		BULB - Console light	2	
-19	450 757	A	INSTRUMENT - Directional gyro	1	
-20	551 135	B	AMPLIFIER - Roll (1X232)	1	
	751 232		AMPLIFIER - Roll (Complete) (1X217)	1	
-20a	754 210		KNOB - Turn trim (36A-39)	1	
-20b	751 783		FUSE - 10 AMP (AGC-10)	1	
-20c	754 209	C	KNOB - (L-R turn) (36A37)	1	
-20d	752 955		RING - Spacer (42A63)	1	
-21	755 825		PAD - Gyro instrument filter (2 per instrument)	AR	
-22	450 758	A	INSTRUMENT - Gyro horizon	1	
-23	551 134		AMPLIFIER - Pitch	1	
-23a	754 367		KNOB - Pitch engage	1	
-24	458 888		ELBOW - (AN823-3D)	1	
-25	19897-00		CONNECTOR - Gyro horizon	1	
-26	454 656		CIRCUIT PROTECTOR - (#109-205-102)	1	
-27	22546-00		PLACARD - Pitch rate, up and down	1	
-28	19885-00		PLACARD - Altitude hold	1	
-29	458 945		ELBOW - (#134A3)	2	
-30	755 814		PLATE - Console face	1	
-31	754 365		KNOB - Pitch control	1	
-32	754 369		KNOB - Dimmer switch	1	
-33	754 370		KNOB - Calibration	1	

A - No longer available.
B - No longer available. Order Part No. 751 232 as a replacement.
C - Used on Amplifier Part No. 751 232 only.

When ordering, always specify Part Number, Description and Serial Number of Aircraft

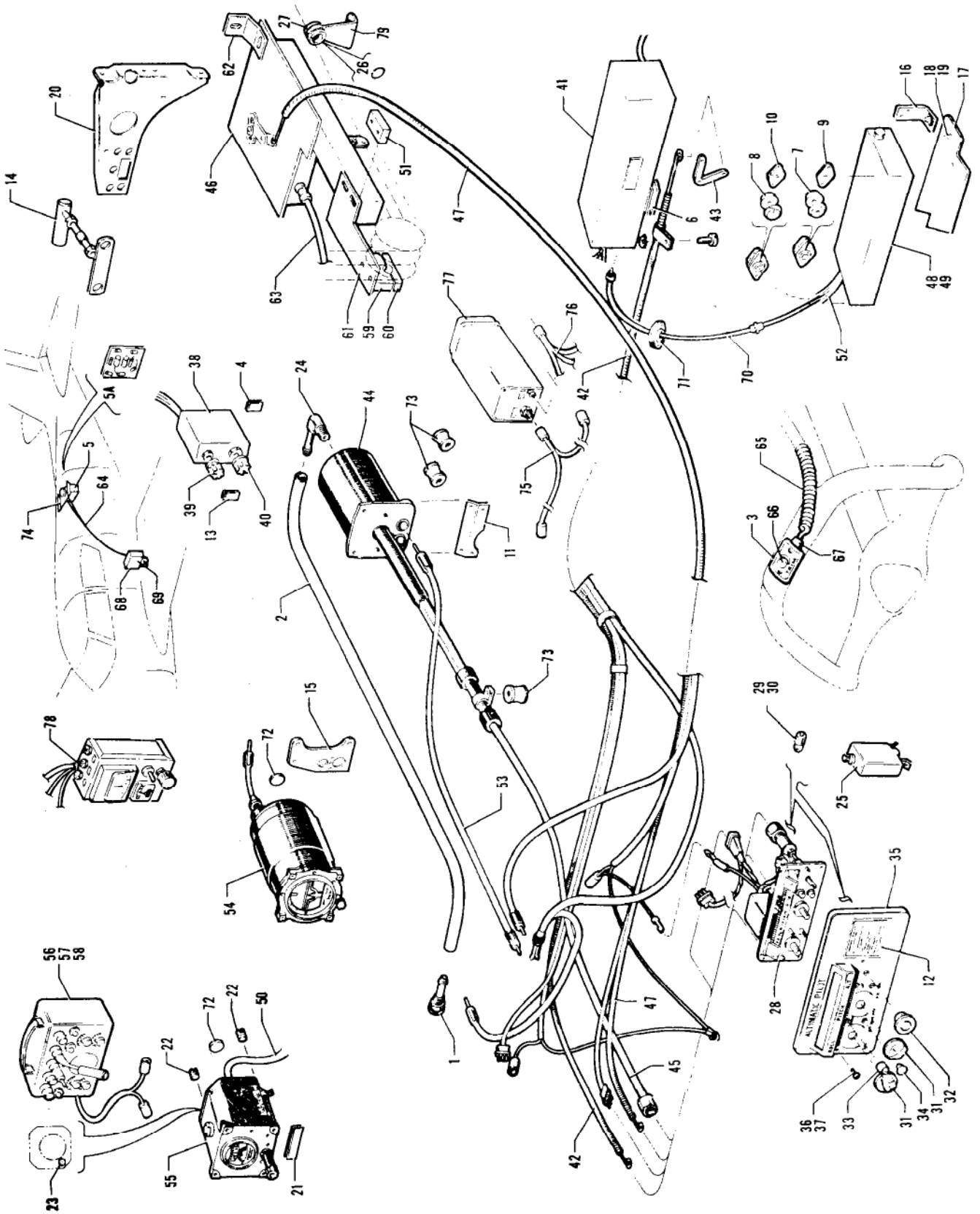

Figure 45. AltiMatic II Installation

Figure and Index Number	Part Number	Code	NOMENCLATURE	No. Req.	SERIAL NUMBERS AFFECTED
45-	23587	XY	DRAWING - Altimatic II Installation		
	24800	Z	DRAWING - Altimatic II Installation		
	24997	V	DRAWING - Altimatic II Installation		
	23674	XY	DRAWING - Altimatic II Schematic		
	31666	DVZ	DRAWING - Altimatic II Schematic		
	31667	EVZ	DRAWING - Altimatic II Schematic		
-1	755 833		STATIC PORT ASSEMBLY - (43A97)	1	
-2	753 036		TUBING - (47S147-36)	1	
-3	24808-00	FZ	PLACARD - Trim switch	1	
	25596-00	GVZ	PLACARD - Trim switch	1	
-4	19885-00		PLACARD - Altitude hold	1	
-5	24704-00	FJZ	SERVO ASSEMBLY - Electric trim	1	26-2 to 26-124 inclusive
	25037-00	GJZ	SERVO ASSEMBLY - Electric trim	1	26-125 and up
	25037-00	HJ	SERVO ASSEMBLY - Electric trim	1	
	753 693	KV	SERVO ASSEMBLY - Electric trim (1D345)	1	24-4247, 24-4300 to 24-4566
-5a	751 276	KV	AMPLIFIER ASSEMBLY - Trim servo (1B346)	1	24-4247, 24-4300 to 24-4566
-6	21782-00		PLATE - Chafing	4	
-7	22104-03		GROMMET	2	
-8	22104-04		GROMMET	2	
-9	22105-03		GASKET	1	
-10	22105-06		GASKET	1	
-11	22427-00		BRACKET - Altitude selector	1	
	24232-00	C	BRACKET - Altitude selector	1	
-12	22530-00	VXY	PLACARD - Operating instructions	1	
	24660-00	Z	PLACARD - Operating instructions	1	
-13	22546-00	A	PLACARD - Pitch rate, up and down	1	
	22546-02	B	PLACARD - Pitch rate, up and down	1	
-14	23148-00	XY	BRACKET ASSEMBLY - Pitch servo support	1	
-15	23670-00		BRACKET - Control assembly mounting	1	

A - Used when 3 inch gyros are not installed.
B - Used when 3 inch gyros are installed.
C - Used when shock mounts are installed.
D - Used when Omni Coupler is installed.
E - Used when Omni Coupler is not installed.
F - Used when push button type switch is installed.
G - Used when toggle type switch is installed.
H - Used on PA-24-260 with serial numbers 24-3642, 24-4000 to 24-4246, 24-4248 to 24-4299 inclusive.
J - Used when pitch trim sensor assembly #1D310-124 or #1D310-124-1 is installed.
K - Used on PA-24-260 with serial numbers 24-3642, 24-4000 to 24-4246, 24-4248 to 24-4299 inclusive, and PA-24-400 if pitch trim sensor assembly #1C365-152 has been installed.
V - Used on PA-24-260 airplanes only.
X - Used on PA-24-180 airplanes only.
Y - Used on PA-24-250 airplanes only.
Z - Used on PA-24-400 airplanes only.

Figure and Index Number	Part Number	Code	NOMENCLATURE	No. Req.	SERIAL NUMBERS AFFECTED
45-16	23710-00		BRACKET ASSEMBLY - Amplifier mounting	2	
-17	23711-00		PLATE ASSEMBLY - Amplifier mounting	1	
-18	494 060		WASHER - (#2600-LW)	2	
-19	487 657		STUD - (#2600-6W)	2	
-20	23728-00	XY	BRACKET - Pitch servo mounting	2	
-21	30279-00		PLACARD - Heading selector	1	
-22	24712-00		PLUG - Pipe	2	
-23	751 272	AVZ	ADAPTER - Directional gyro	1	
-24	458 929		ELBOW - (AN842-4D)	1	
-25	454 656		CIRCUIT PROTECTOR - (#109-205-102)	1	
-26	40081-00	VZ	LOCK RING	1	
-27	40071-00	VZ	FAIRLEAD	2	
-28	753 868		CONSOLE ASSEMBLY - (1X227-E) (Less face plate)	1	
-29	751 460		BULB - Effort light	2	
-30	751 461		BULB - Console light	2	
-31	754 366		KNOB - Engage (36A77)	2	
-32	754 368		KNOB - Altitude selector (36A54)	1	
-33	754 370		KNOB - Calibration (36A75)	1	
-34	754 369		KNOB - Dimmer (36A76)	1	
-35	755 814		PLATE - Face (13B111)	1	
-36	756 146		SCREW - (3S131B)	2	
-37	753 190		WASHER - (4S88B)	2	
-38	751 240		CONTROL ASSEMBLY - (1 x 246)	1	
-39	754 364		KNOB - Trim roll (36A39)	1	
-40	754 365		KNOB - Trim pitch (36A73)	1	
-41	753 634		ROLL SERVO ASSEMBLY - (1X221E-C) (less engage cable and lever)	1	
-42	753 872		CABLE - Engage (30A72-32)	1	
-43	752 334		LEVER - Engage	1	
-44	551 131		ALTITUDE SELECTOR - (1X225)	1	
-45	756 125		CABLE - Altitude selector (81A8-19C)	1	
-46	753 633	XY	PITCH SERVO ASSEMBLY - (1X222-C1)	1	
	753 678	VZ	PITCH SERVO ASSEMBLY - (1X312-C)	1	
-47	753 843		CABLE - Engage (30A72-58)	1	
-48	751 239	C	AMPLIFIER - (1X247)	1	
	751 263	B	AMPLIFIER - (1D293)	1	
-49	753 916	B	COVER - Louvered, amplifier	1	
-50	753 035		TUBING - Air (47S147-14)	1	
-51	25422-00	VZ	BLOCK - Spacer, pitch servo bracket	1	
-52	751 952		HARNESS ASSEMBLY - (30D132)	1	
-53	753 841		CABLE - Altitude selector (30A79)	1	

A - Used when Omni Coupler is installed.
B - Used on PA-24-260 with serial numbers 24-4049 and up, and PA-24-400 with serial numbers 26-132 and up or if Kit 756 836 or 756 837 has been installed.
C - If Kit 756 836 or 756 837 has been installed on PA-24-260 or PA-24-400, order Part No. 751 263.
V - Used on PA-24-260 airplanes only.
X - Used on PA-24-180 airplanes only.
Y - Used on PA-24-250 airplanes only.
Z - Used on PA-24-400 airplanes only.

Figure and Index Number	Part Number	Code	NOMENCLATURE	No. Req.	SERIAL NUMBERS AFFECTED
45-54	752 093	JXY	INSTRUMENT - Gyro horizon (52D21-1)	1	
	550 641	JVZ	INSTRUMENT - Gyro horizon (30997-02)	1	
	550 625	CZ	INSTRUMENT - Gyro horizon (31323-00) (3 inch)	1	
	550 625	CV	INSTRUMENT - Gyro horizon (31323-00) (3 inch)	1	24-3642, 24-4000 to 24-4366 incl.
	25222-02	CV	INSTRUMENT - Gyro horizon (52D59) (3 inch)	1	24-3642, 24-4000 to 24-4366 incl.
	550 776	CV	INSTRUMENT - Gyro horizon (32166-00) (3 inch)	1	24-4367 and up
-55	752 092	JXY	INSTRUMENT - Directional gyro (52D27-E)	1	
	550 643	DJVZ	INSTRUMENT - Directional gyro (31058-02)	1	
	550 626	CDZ	INSTRUMENT - Directional gyro (31324-00) (3 inch)	1	
	550 626	CDV	INSTRUMENT - Directional gyro (31324-00) (3 inch)	1	24-3642, 24-4000 to 24-4366 incl.
	550 644	CEZ	INSTRUMENT - Directional gyro (31324-02) (3 inch)	1	
	550 644	CEV	INSTRUMENT - Directional gyro (31324-02) (3 inch)	1	24-3642, 24-4000 to 24-4366 incl.
	25229-00	CDV	INSTRUMENT - Directional gyro (52D61) (3 inch)	1	24-3642, 24-4000 to 24-4366 incl.
	550 779	CDV	INSTRUMENT - Directional gyro (32169-00) (3 inch)	1	24-4367 and up
	550 778	CEV	INSTRUMENT - Directional gyro (32168-00) (3 inch)	1	24-4367 and up
-56	756 706		ADAPTER - Test kit (66B58)	1	
-57	753 873		CABLE - Test (30D131T)	1	
-58	751 412		TEST EQUIPMENT	1	
-59	24799-02	VZ	BLOCK - Pitch servo mounting	1	
-60	24799-03	VZ	BLOCK - Pitch servo mounting	1	
-61	24801-00	VZ	BRACKET - Pitch servo mounting	1	
-62	24802-00	VZ	BRACKET - Pitch servo mounting	1	
-63	24804-00	AFZ	CABLE ASSEMBLY - Trim servo	1	
	31890-03	BFZ	CABLE ASSEMBLY - Trim servo	1	
	31890-03	FH	CABLE ASSEMBLY - Trim servo	1	
	32006-03	GV	CABLE ASSEMBLY - Trim servo	1	24-4247, 24-4300 and up
-64	24805-00	FZ	CABLE ASSEMBLY - Trim sensor	1	
	24805-00	FH	CABLE ASSEMBLY - Trim sensor	1	
	32005-03	GV	CABLE ASSEMBLY - Trim sensor	1	24-4247, 24-4300 and up
-65	24807-00	FZ	CORD AND SWITCH ASSEMBLY - Electric trim (push button type)	1	
	31893-02	FZ	CORD AND SWITCH ASSEMBLY - Electric trim (toggle type)	1	
	31893-02	FH	CORD AND SWITCH ASSEMBLY - Electric trim (toggle type)	1	
	32008-03	GV	CORD AND SWITCH ASSEMBLY - Electric trim (toggle type)	1	24-4247, 24-4300 and up

A - Used when push button type switch is installed.
B - Used when toggle type switch is installed.
C - See Figure 48 for positive identification of 3 inch instruments.
D - Used when Omni Coupler is not installed.
E - Used when Omni Coupler is installed.
F - Used when pitch trim sensor assembly #1D310-124 or #1D310-124-1 is installed.
G - Used on PA-24-260 with serial numbers 24-3642, 24-4000 to 24-4246, 24-4248 to 24-4299 inclusive, and PA-24-400 if pitch trim sensor assembly #1C365-152 has been installed.
H - Used on PA-24-260 with serial numbers 24-3642, 24-4000 to 24-4246, 24-4248 to 24-4299 inclusive.
J - No longer available.
V - Used on PA-24-260 airplanes only.
X - Used on PA-24-180 airplanes only.
Y - Used on PA-24-250 airplanes only.
Z - Used on PA-24-400 airplanes only.

Figure and Index Number	Part Number	Code	NOMENCLATURE	No. Req.	SERIAL NUMBERS AFFECTED
45-66	487 861	FZ	SWITCH - (#MSP-205R)	1	
	487 859	AFZ	SWITCH - (#8868-K2)	1	
	487 873	GV	SWITCH - (#8869-K2)	1	24-4247, 24-4300 and up
-67	24641-00		HOOD ASSEMBLY - Connector	1	
-68	756 198	DZ	SENSOR ASSEMBLY - Pitch trim (1D310-124)	1	
	756 198	AD	SENSOR ASSEMBLY - Pitch trim (1D310-124)	1	
	756 255	E	SENSOR ASSEMBLY - Pitch trim (1D310-124-1)	1	
	756 248	CV	SENSOR ASSEMBLY - Pitch trim (1C365-152)	1	24-4247, 24-4300 and up
-69	751 277		AMPLIFIER - Pitch trim sensor (1B383) (used with pitch trim sensor #1D310-124-1)	1	
-70	753 878	XY	CABLE ASSEMBLY - Servo (30A88)	2	
	753 878	Z	CABLE ASSEMBLY - Servo (30A88)	2	26-2 to 26-73 inclusive
	24233-00	VZ	CABLE ASSEMBLY - Servo	1	26-74 and up, 24-3642, 24-4000 and up
-71	22104-12	VZ	GROMMET - Firewall seal	2	26-74 and up, 24-3642, 24-4000 and up
	22105-09	VZ	GASKET - Firewall seal	1	26-74 and up, 24-3642, 24-4000 and up
-72	755 825		PAD - Gyro instrument filter (not used on 3 inch gyros)	AR	
-73	475 130		MOUNT - Shock (#323B)	3	
-74	24624-00	VZ	BRACKET ASSEMBLY - Servo mounting	1	
-75	753 932		CABLE ASSEMBLY - Omni coupler (30B152)	1	
-76	25008-00	BVZ	CABLE ASSEMBLY - Omni coupler	1	
-77	31617-00	VZ	COUPLER ASSEMBLY - Omni (1C292)	1	
-78	756 873	VZ	KIT - Test, omni coupler	1	
-79	25421-00	VZ	BRACKET ASSEMBLY - Fairlead	1	

A - Used on PA-24-260 with serial numbers 24-3642, 24-4000 to 24-4246, 24-4248 to 24-4299 inclusive.
B - Used when Omni Coupler is installed.
C - Used on PA-24-260 with serial numbers 24-3642, 24-4000 to 24-4246 inclusive, 24-4248 to 24-4299 inclusive, and PA-24-400 if pitch trim sensor assembly #1C365-152 has been installed.
D - Order Part No. 756 255 if Kit 756 974 has been installed.
E - Used on PA-24-260 with serial numbers 24-3642, 24-4000 to 24-4246 inclusive, 24-4247 to 24-4299 inclusive, and PA-24-400 with serial numbers 26-2 and up if Kit 756 974 has been installed.
F - Used when pitch trim sensor assembly #1D310-124 or #1D310-124-1 is installed.
G - Used on PA-24-260 with serial numbers 24-3642, 24-4000 to 24-4246 inclusive, 24-4248 to 24-4299 inclusive, and PA-24-400 if pitch trim sensor assembly #1C365-152 has been installed.
V - Used on PA-24-260 airplanes only.
X - Used on PA-24-180 airplanes only.
Y - Used on PA-24-250 airplanes only.
Z - Used on PA-24-400 airplanes only.

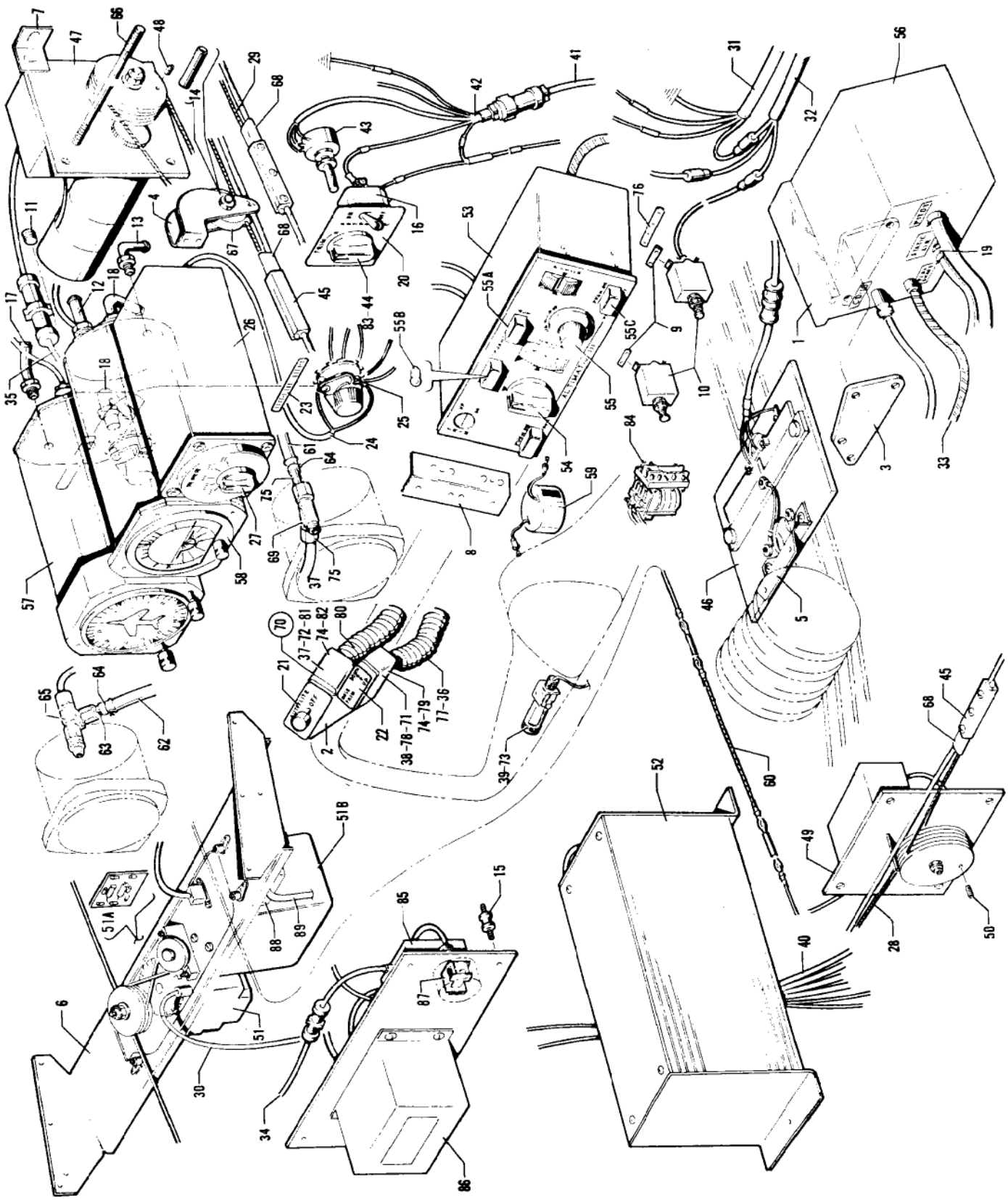

Figure 46. AltiMatic III and III B Installations

Figure and Index Number	Part Number	Code	NOMENCLATURE	No. Req.	SERIAL NUMBERS AFFECTED
46-	25708	A	DRAWING - AltiMatic Pilot III Installation		
	26884		DRAWING - AltiMatic Pilot III B Installation		24-4783, 24-4804 and up
-1	13145-69	A	STRIP - Rubber, altitude selector bracket	1	
-2	32205-00	A	BRACKET - Disconnect switch	1	
-3	25687-00		BRACKET - Altitude selector mounting	1	
-4	25715-00	A	BRACKET - Pitch servo pulley	1	
	26649-00		BRACKET ASSEMBLY - Pitch servo fairlead	1	24-4783, 24-4804 and up
-5	25599-00		BRACKET - Trim sensor mounting	1	
-6	24624-00	A	BRACKET ASSEMBLY - Servo mounting	1	
	26647-00		BRACKET ASSEMBLY - Servo mounting	1	24-4783, 24-4804 and up
-7	25677-00	A	ANGLE - Pitch servo mounting	1	
	26648-00		ANGLE - Pitch servo mounting	1	24-4783, 24-4804 and up
-8	25671-00	A	ANGLE - AltiMatic III console	1	
-9	31506-02	A	BAR - Bus	2	
	16439-00		BAR - Bus	2	24-4783, 24-4804 and up
-10	454 656		PROTECTOR - Circuit (#109-205-102)	3	
-11	24712-02		PLUG - Pipe, plated (581 212)	1	
-12	451 939	A	ADAPTER - (1K10-4-6)	1	
	451 862		ADAPTER - (AN840-4)	1	24-4783, 24-4804 and up
-13	451 881	A	ADAPTER - (1K10-2-4)	1	
	558 937		ELBOW - (1K46-1)	1	24-4783, 24-4804 and up
-14	14976-104	A	BUSHING - Pitch servo pulley	1	
	40081-00		LOCK RING - Pitch servo fairlead	1	24-4783, 24-4804 and up
-15	475 130		MOUNT - Shock, gyro amplifier (323B)	4	
-16	487 860	A	SWITCH - AutoFlite (2FA54-73)	1	
	32370-13		SWITCH - AutoFlite (487 956)	1	24-4783, 24-4804 and up
-17	558 913	A	ELBOW - (#1K9-4-6)	1	
	558 937		ELBOW - (#1K46-1)	1	24-4783, 24-4804 and up
-18	458 945	A	ELBOW - (#1K1-4-6)	2	
	558 936		ELBOW - (#1K45-1)	2	24-4783, 24-4804 and up
-19	451 857		ADAPTER - (AN840-4D)	1	
-20	25706-00	A	PLACARD - AutoFlite (581 281)	1	
-21	25707-00	A	PLACARD - AutoFlite (581 282)	1	
	43365-00		PLACARD - AutoPilot (581 376)	1	24-4783, 24-4804 and up
	43362-00	B	PLACARD - AutoPilot and boom mike (581 373)	1	
-22	25596-00	A	PLACARD - Electric trim (581 168)	1	
	43360-00		PLACARD - Electric trim (581 371)	1	24-4783, 24-4804 and up
-23	25743-00	A	PLACARD - Omni coupler (581 290)	1	
-24	25716-00	A	HARNESS ASSEMBLY - Omni coupler	1	
	32763-02		HARNESS ASSEMBLY - Omni coupler	1	24-4783, 24-4804 and up
-25	42038-02	A	SWITCH - Transmitter selector (487 928)	1	
	32550-00		SWITCH - Transmitter selector (487 942)	1	24-4783, 24-4804 and up
-26	551 114		COUPLER ASSEMBLY - Omni (25690-00) (for D.C. converter)	1	
	757 905		COUPLER ASSEMBLY - Omni (JC388P-C) (for A.C. converter)	1	

A - Used on airplanes with serial numbers 24-4567 to 24-4782 inclusive, 24-4784 to 24-4803 inclusive.
B - Used if Boom Mike is installed.

When ordering, always specify Part Number, Description and Serial Number of Aircraft

Figure and Index Number	Part Number	Code	NOMENCLATURE	No. Req.	SERIAL NUMBERS AFFECTED
46-27	757 052		KNOB - (36A98)	1	
-28	25960-02		CABLE ASSEMBLY - Bridle, roll servo	1	
-29	25960-03		CABLE ASSEMBLY - Bridle, pitch servo	1	
-30	32005-03		CABLE ASSEMBLY - Trim sensor	1	
-31	32007-07		CABLE ASSEMBLY - Trim servo	1	
-32	32210-02	D	HARNESS ASSEMBLY - Trim servo	1	
	32210-06		HARNESS ASSEMBLY - Trim servo	1	24-4965 and up
-33	32212-02		CABLE - Flex, altitude selector	1	
-34	32203-04		CABLE - Extension	1	
-35	32203-06		CABLE - Extension	1	
-36	26934-00		CORD ASSEMBLY	1	24-4783, 24-4804 and up
-37	487 904		SWITCH - AutoFlite (#39-1)	1	24-4783, 24-4804 and up
-38	587 865		SWITCH - (#800452-03)	1	24-4783, 24-4804 and up
-39	472 770		LIGHT ASSEMBLY - Map (#15-0100-2)	1	24-4783, 24-4804 and up
-40	751 989		HARNESS ASSEMBLY - AltiMatic III (25689-02)	1	
-41	751 993		HARNESS ASSEMBLY - AutoFlite (32211-02)	1	
-42	751 996	A	HARNESS ASSEMBLY - AutoFlite (32207-03) (with knob)	1	
	32207-04		HARNESS ASSEMBLY - AutoFlite (without knob)	1	24-4783, 24-4804 and up
-43	757 296	A	POTENTIOMETER - (18A18-2)	1	
	757 297		POTENTIOMETER - (18A18)	1	24-4783, 24-4804 and up
-44	757 052	A	KNOB - Potentiometer (36A98)	1	
-45	753 981		CLAMP ASSEMBLY - Bridle cable (42A173)	4	
-46	756 248		SENSOR ASSEMBLY - Trim (1C365-152)	1	
-47	753 721	A	SERVO ASSEMBLY - Pitch (1D363)	1	
	43909-09		SERVO ASSEMBLY - Pitch (1C508-1-186P)	1	24-4783, 24-4804 and up
-48	757 579		SET SCREW - Capstan (3S326)	1	
-49	753 721	A	SERVO ASSEMBLY - Roll (1D363)	1	
	43909-04		SERVO ASSEMBLY - Roll (1C363-1-161R)	1	24-4783, 24-4804 and up
-50	757 579		SET SCREW - Capstan (3S326)	1	
-51	753 693	A	SERVO ASSEMBLY - Trim (1D345)	1	
	757 590		SERVO ASSEMBLY - Trim (1C345-1)	1	24-4783, 24-4804 and up
-51a	751 276	A	AMPLIFIER ASSEMBLY - Trim servo (1B346)	1	
-51b	751 301		AMPLIFIER ASSEMBLY - Trim servo (79C53-1)	1	24-4783, 24-4804 and up
-52	751 284		AMPLIFIER - (1D395)	1	
-53	757 807	A	CONSOLE - AltiMatic III (25688-00)	1	
	26882-00		CONSOLE - AltiMatic IIIB (1C519)	1	24-4783, 24-4804 and up
-54	757 052		KNOB - Roll (36A98)	1	
-55	757 051		KNOB - Selector (36A123)	1	
-55a	757 581	B	SWITCH - Engage (40A22-4)	4	
-55b	753 496	B	BULB - Engage (65S28)	4	
	758 164	C	BULB - Blue (65A56-1)	3	
-55c	758 179	C	BUTTON - Push (36S137)	3	
-56	757 538		ALTITUDE SELECTOR - (1D391-186)	1	
-57	550 778		INSTRUMENT - Directional gyro (32168-00) (3 inch)	1	
-58	550 559		INSTRUMENT - Gyro horizon (32173-02) (3 inch)	1	
-59	754 807		FILTER - Noise reducing (1A479)	1	

A - Used on airplanes with serial numbers 24-4567 to 24-4782 inclusive, 24-4784 to 24-4803 inclusive.
B - Used with AltiMatic III Console only.
C - Used with AltiMatic IIIB Console only.
D - Used on PA-24-260 airplanes with serial numbers 24-4567 to 24-4964 inclusive.

When ordering, always specify Part Number, Description and Serial Number of Aircraft

Figure and Index Number	Part Number	Code	NOMENCLATURE	No. Req.	SERIAL NUMBERS AFFECTED
46-60	14300-30		CABLE ASSEMBLY - Stabilator trim	1	
-61	16633-65		HOSE - Airspeed indicator	1	
-62	16633-66		HOSE - Airspeed indicator	1	
-63	25705-00	A	TUBE ASSEMBLY - Airspeed indicator	1	
	26564-00		TUBE ASSEMBLY - Airspeed indicator	1	24-4783, 24-4804 and up
-64	454 983		CLAMP - (SAE #8)	4	
-65	488 525		TEE - Swivel (#3-SW-12)	1	
-66	14183-06		ROD - Pitch servo adjustment	1	
-67	481 640	A	PULLEY - Pitch servo cable (MS24566-1B)	1	
	40071-00		FAIRLEAD - Pitch servo cable	2	24-4783, 24-4804 and up
-68	26100-00		SLEEVE - Safety	4	
-69	488 310		TEE - (AN826-3D)	1	
-70	25846-00	A	CORD ASSEMBLY - Electric trim, AutoFlite and map light	1	
-71	487 873	A	SWITCH - Toggle (#8869-K2)	1	
-72	487 861	A	SWITCH - (#MSP-205R)	1	
-73	472 770	A	LIGHT ASSEMBLY - Map (#15-0100-2)	1	
-74	24641-00	A	HOOD ASSEMBLY - Connector	2	
-75	25705-00	A	TUBE ASSEMBLY - Rate of climb	2	
	25705-00		TUBE ASSEMBLY - Rate of climb	1	24-4783, 24-4804 and up
-76	26791-00		BAR - Bus	1	24-4783, 24-4804 and up
-77	32008-03	AB	CORD ASSEMBLY - Electric trim power	1	
-78	487 873	A	SWITCH - Toggle (#8869-K2)	1	
-79	24641-00	A	HOOD ASSEMBLY - Connector	1	
-80	32213-00	AB	CORD ASSEMBLY - AutoFlite disconnect switch	1	
-81	487 861	A	SWITCH - (#MSP-205R)	1	
-82	24641-00	A	HOOD ASSEMBLY - Connector	1	
-83	571 112		KNOB - Potentiometer (#105D)	1	24-4783, 24-4804 and up
-84	26838-00		RELAY ASSEMBLY - AutoPilot	1	24-4783, 24-4804 and up
-85	755 990		BOX - Relay switching (1B405)	1	
-86	751 278		AMPLIFIER - Gyro (1C359-1)	1	
-87	756 052		RELAY - Gyro amplifier (#80S11)	1	
-88	756 347		TRIM WARNING ASSEMBLY UNIT - (1C547)	1	24-4965 and up
-89	755 202		HARNESS ASSEMBLY - Trim warning (30C358)	1	24-4965 and up

A - Used on airplanes with serial numbers 24-4567 to 24-4782 inclusive, 24-4784 to 24-4803 inclusive.
B - Used if map light is not installed.

When ordering, always specify Part Number, Description and Serial Number of Aircraft

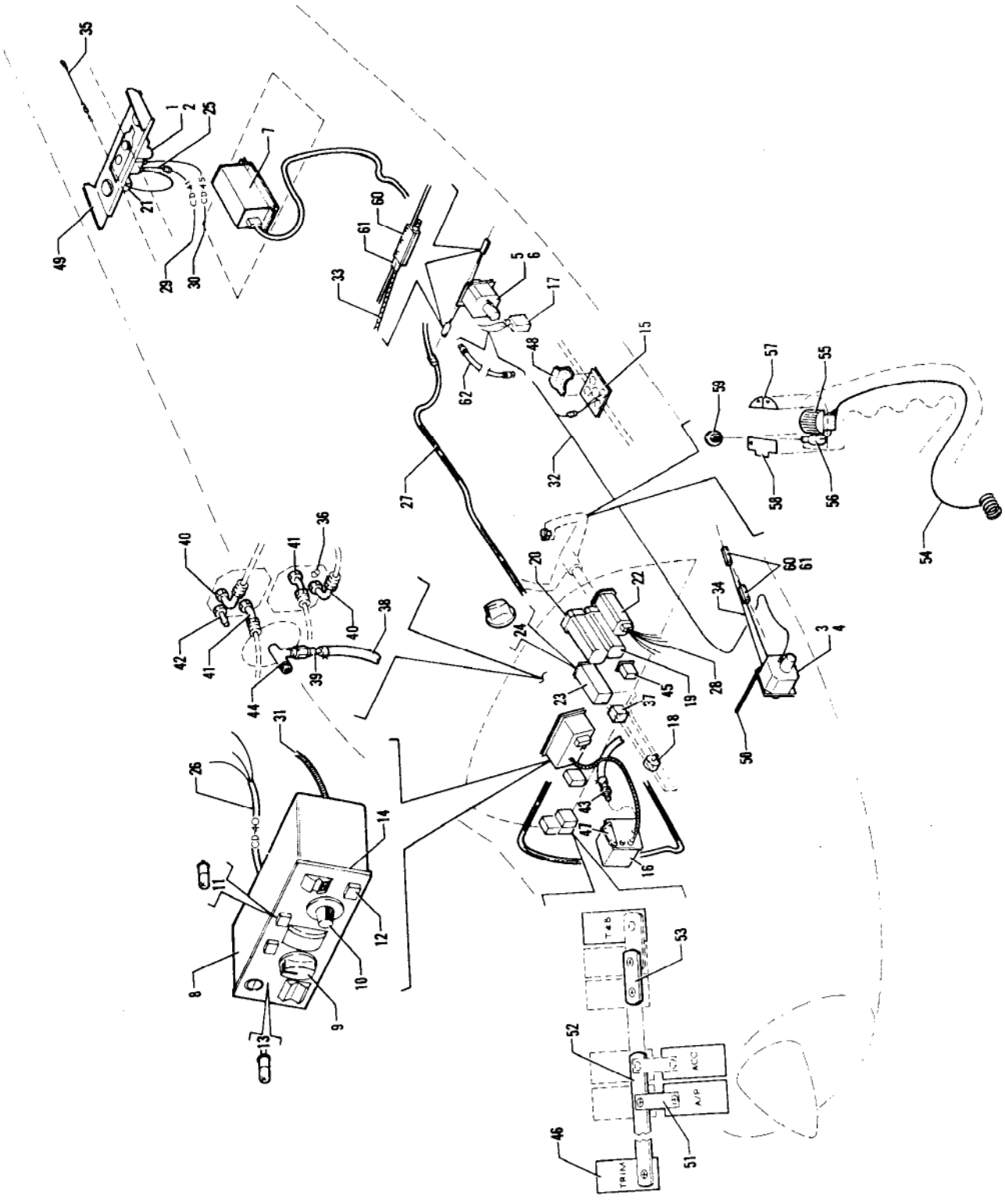

Figure 46A. AltiMatic Pilot III B-1

Figure and Index Number	Part Number	Code	NOMENCLATURE	No. Req.	SERIAL NUMBERS AFFECTED
46A-	27333		DRAWING - Altimatic Pilot III B-1 Installation		
-1	757 711		SERVO ASSEMBLY - Trim (1C345-1-186)	1	
-2	751 301		AMPLIFIER - Trim servo (79C53-1)	1	
-3	43909-09		SERVO ASSEMBLY - Pitch (1C508-1-186P)	1	
-4	757 579		SET SCREW - Capstan (3S326)	1	
-5	43909-04		SERVO ASSEMBLY - Roll (1C363-1-161R)	1	
-6	757 579		SET SCREW - Capstan (3S326)	1	
-7	751 314		AMPLIFIER - (1C515-1)	1	
-8	26882-02		CONSOLE - Altimatic III B-1 (1C519-2)	1	
-9	757 052		KNOB - Roll (36A98)	1	
-10	757 051		KNOB - Selector (36A123)	1	
-11	758 207		BULB - Blue (65A22-1)	3	
-12	758 179		BUTTON - Push (36S137)	3	
-13	753 496		BULB - Console, roll switch (65S28)	1	
-14	757 382		PLATE ASSEMBLY - Face (13B-439-1) (with four bulbs)	1	
-15	756 248		SENSOR ASSEMBLY - Trim (1C365-152)	1	
-16	757 684		ALTITUDE SELECTOR - (1D391-2)	1	
-17	755 990		RELAY SWITCHING BOX - (1B405)	1	
-18	754 807		FILTER - Noisc (1A479)	1	
-19	550 778		INSTRUMENT - Directional gyro (32168-00) (3 inch)	1	
-20	550 559		INSTRUMENT - Attitude gyro (32173-02) (3 inch)	1	
-21	756 347		TRIM WARNING ASSEMBLY UNIT - (1C547)	1	
-22	52586-02		INDICATOR ASSEMBLY - Turn and bank (550 497)	1	
-23	551 114		COUPLER ASSEMBLY - Omni (25690-00)	1	
-24	757 052		KNOB - (36A98)	1	
-25	755 202		HARNESS ASSEMBLY - Trim warning (30C358)	1	
-26	32210-06		HARNESS ASSEMBLY - Trim servo	1	
-27	25689-02		HARNESS ASSEMBLY - Altimatic III B-1	1	
-28	52588-05		HARNESS ASSEMBLY - Turn and bank (30C402)	1	
-29	32005-03		CABLE ASSEMBLY - Pitch trim sensor	1	
-30	32007-07		CABLE ASSEMBLY - Pitch trim servo	1	
-31	32212-02		CABLE ASSEMBLY - Flexible (81A16-186)	1	
-32	32203-06		CABLE ASSEMBLY - Pitch servo extension	1	
-33	25960-02		CABLE ASSEMBLY - Bridle, roll servo	1	
-34	25960-03		CABLE ASSEMBLY - Bridle, pitch servo	1	
-35	14300-30		CABLE ASSEMBLY - Pitch trim servo extension	1	
-36	24712-02		PLUG - Pipe, plated (581 212)	1	
-37	52624-02		RELAY ASSEMBLY - AutoPilot	1	
-38	16633-65		HOSE - Static air, altitude selector	1	
-39	25705-00		TUBE ASSEMBLY - Static air, altitude selector	1	
-40	558 936		ELBOW - (#1K45-1)	2	
-41	558 937		ELBOW - (#1K46-1)	2	
-42	451 939		ADAPTER - (#1K10-4-6)	1	
-43	451 857		ADAPTER - (AN840-4D)	1	
-44	488 310		TEE - (AN826-3D)	1	
-45	32370-13		SWITCH - Illuminated	1	
-46	454 656		CIRCUIT PROTECTOR - (#109-205-102)	4	
-47	25687-00		BRACKET - Altitude selector mounting	1	
-48	25599-00		BRACKET - Trim sensor mounting	1	
-49	26647-00		BRACKET ASSEMBLY - Pitch trim servo mounting	1	
-50	14183-06		ROD - Tie, control cable	1	

When ordering, always specify Part Number, Description and Serial Number of Aircraft

Figure and Index Number	Part Number	Code	NOMENCLATURE	No. Req.	SERIAL NUMBERS AFFECTED
46A-51	16439-00		BAR - Bus, circuit protector	1	
-52	26791-00		BAR - Bus, circuit protector	1	
-53	31506-02		BAR - Bus, circuit protector	1	
-54	26934-00		CORD ASSEMBLY - Control wheel	1	
-55	587 865		SWITCH ASSEMBLY - (#800452-03)	1	
-56	487 904		SWITCH ASSEMBLY - (#39-1)	1	
-57	43360-00		PLACARD - Control wheel ("Dwn-Up")	1	
-58	43365-00		PLACARD - Control wheel ("A/P Off")	1	
-59	27214-00		NUT - AutoPilot switch	1	
-60	753 981		CLAMP ASSEMBLY - Bridle cable (42A173)	4	
-61	26100-00		SLEEVE - Safety, control cable	4	
-62	32203-04		CABLE - Extension, relay switch box	1	

When ordering, always specify Part Number, Description and Serial Number of Aircraft

PILOTEN-SERVICE
Straubing LBA II-
Telefon 09421/9

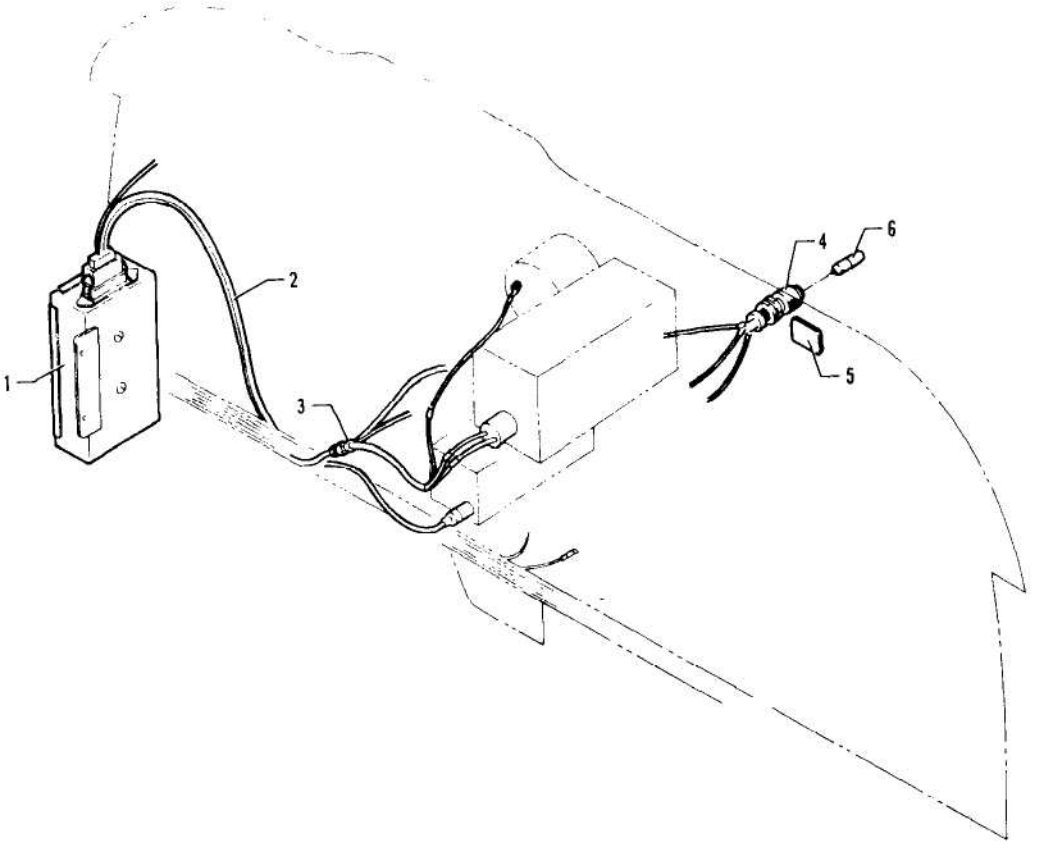

Figure 47. Glide Slope Coupler Installation
(Serial Nos. 24-4783, 24-4804 and up)

Figure and Index Number	Part Number	Code	NOMENCLATURE	No. Req.	SERIAL NUMBERS AFFECTED
47-	26729		DRAWING - Glide Slope Coupler Installation		
-1	751 300		COUPLER ASSEMBLY - Glide slope (1C493)	1	
-2	752 010		HARNESS ASSEMBLY - Glide slope (30C291)	1	
-3	752 011		HARNESS ASSEMBLY - Glide slope (30B295)	1	
-4	752 371		INDICATOR LIGHT ASSEMBLY - Glide slope coupler (30A296)	1	
-5	43918-00		PLACARD - Glide slope coupler (581 471)	1	
-6	472 054		LAMP - Indicator light (#330)	1	

When ordering, always specify Part Number, Description and Serial Number of Aircraft

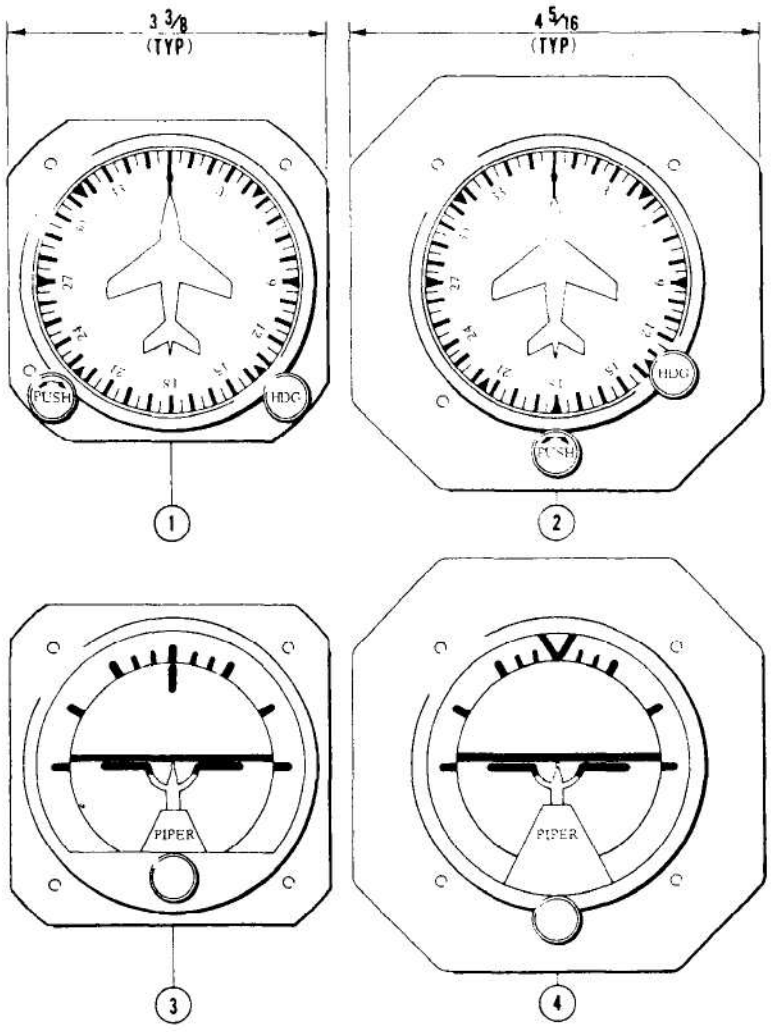

Figure 48. Gyro Instruments (3 inch)

Figure and Index Number	Part Number	Code	NOMENCLATURE	No. Req.	SERIAL NUMBERS AFFECTED
48-1	550 626	A	INSTRUMENT - Directional gyro (31324-00)	1	24-3642, 24-4000 to 24-4366 incl.
	550 779	A	INSTRUMENT - Directional gyro (32169-00)	1	24-4367 to 24-4566 inclusive
	550 778	A	INSTRUMENT - Directional gyro (32168-00)	1	24-4567 and up
	550 644	B	INSTRUMENT - Directional gyro (31324-02)	1	24-3642, 24-4000 to 24-4366 incl.
	550 778	B	INSTRUMENT - Directional gyro (32168-00)	1	24-4367 and up
-2	25229-00	A	INSTRUMENT - Directional gyro (52D61)	1	24-3642, 24-4000 to 24-4366 incl.
-3	550 625	C	INSTRUMENT - Gyro horizon (31323-00)	1	24-3642, 24-4000 to 24-4366 incl.
	550 776	C	INSTRUMENT - Gyro horizon (32166-00)	1	24-4367 to 24-4566 inclusive
	550 559	E	INSTRUMENT - Gyro horizon (32173-02)	1	24-4567 and up
	550 645	D	INSTRUMENT - Gyro horizon (31694-00)	1	24-3642, 24-4000 to 24-4366 incl.
	550 777	D	INSTRUMENT - Gyro horizon (32167-00)	1	24-4367 to 24-4566 inclusive
	550 557	F	INSTRUMENT - Gyro horizon (32172-02)	1	24-4567 and up
-4	25222-00	D	INSTRUMENT - Gyro horizon (52D60)	1	24-3642, 24-4000 to 24-4366 incl.
	25222-02	C	INSTRUMENT - Gyro horizon (52D59)	1	24-3642, 24-4000 to 24-4366 incl.

A - Used when omni coupler is not installed.
B - Used when omni coupler is installed.
C - Used when AltiMatic II is installed.
D - Used when AutoControl II is installed.
E - Used when AltiMatic III is installed.
F - Used when AutoControl III is installed.

When ordering, always specify Part Number, Description and Serial Number of Aircraft

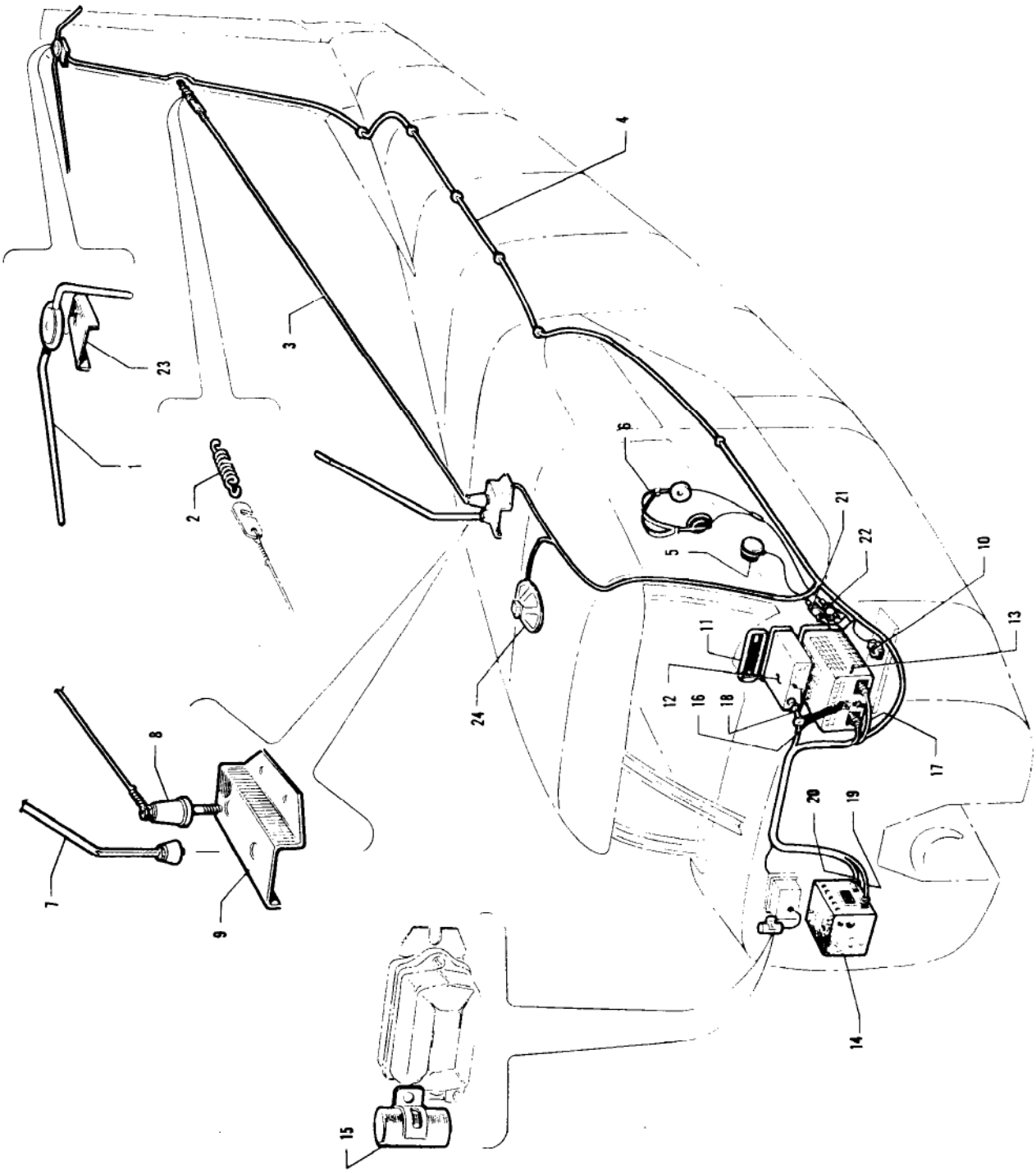

Figure 49. Custom Radio Installation
(Serial Nos. 24-1 to 24-2174, 24-2176 to 24-2298 inclusive)

Figure and Index Number	Part Number	Code	NOMENCLATURE	No. Req.	SERIAL NUMBERS AFFECTED
49-	21316		DRAWING - Radio Installation (Superhomer and Low Frequency)		
-1	19109-00		ANTENNA ASSEMBLY - Receiving	1	
-2	17783-00		SPRING - Low frequency antenna	1	
-3	17953-05		ANTENNA ASSEMBLY - Low frequency	1	
-4	14564-03		CABLE ASSEMBLY - Receiving antenna	1	
-5	474 647		MICROPHONE - (Telephonics #RS-38A)	1	
	474 649		MICROPHONE - (TEL-66C)	1	
-6	464 327		HEADPHONE - (#P-23)	1	
-7	451 272		ANTENNA ASSEMBLY - Transmitting	1	
-8	467 062		INSULATOR - (#135-42)	1	
-9	21307-00		BRACKET - Antenna mounting	1	
-10	454 657		CIRCUIT PROTECTOR - (10 Amp) Wood	2	
-11	20865-00		PLATE ASSEMBLY - Instrument panel	1	
-12		A	RECEIVER - LFR-3 Low Frequency	1	
-13		A	SUPERHOMER - VHT-3	1	
-14		A	POWER UNIT - V12P-5	1	
-15	19286-00		CAPACITOR ASSEMBLY - Regulator	1	
-16	21306-00		STRAP - Radio support	1	
-17	15065-03		CABLE ASSEMBLY - VHF lead in	1	
-18	14563-05		CABLE ASSEMBLY - Low frequency receiving	1	
-19	14566-05		CABLE ASSEMBLY - Low frequency receiving power	1	
-20	21308-00		HARNESS ASSEMBLY - Audio	1	
-21	468 002		MIKE JACK - (S12B)	1	
-22	468 003		PHONE JACK - (#1)	1	
-23	20389-00		PLATE - Receiving antenna mounting	1	
-24	21879-00	B	SPEAKER ASSEMBLY	1	
-25	21878-00		GASKET - Speaker mounting, rubber	1	

A - Not available through Piper Aircraft Corporation. Secure from National Aeronautical Corporation, Ambler, Pennsylvania.

B - Use rubber gasket, Part No. 21878-00 when replacing speaker mounted in wooden panel.

When ordering, always specify Part Number, Description and Serial Number of Aircraft

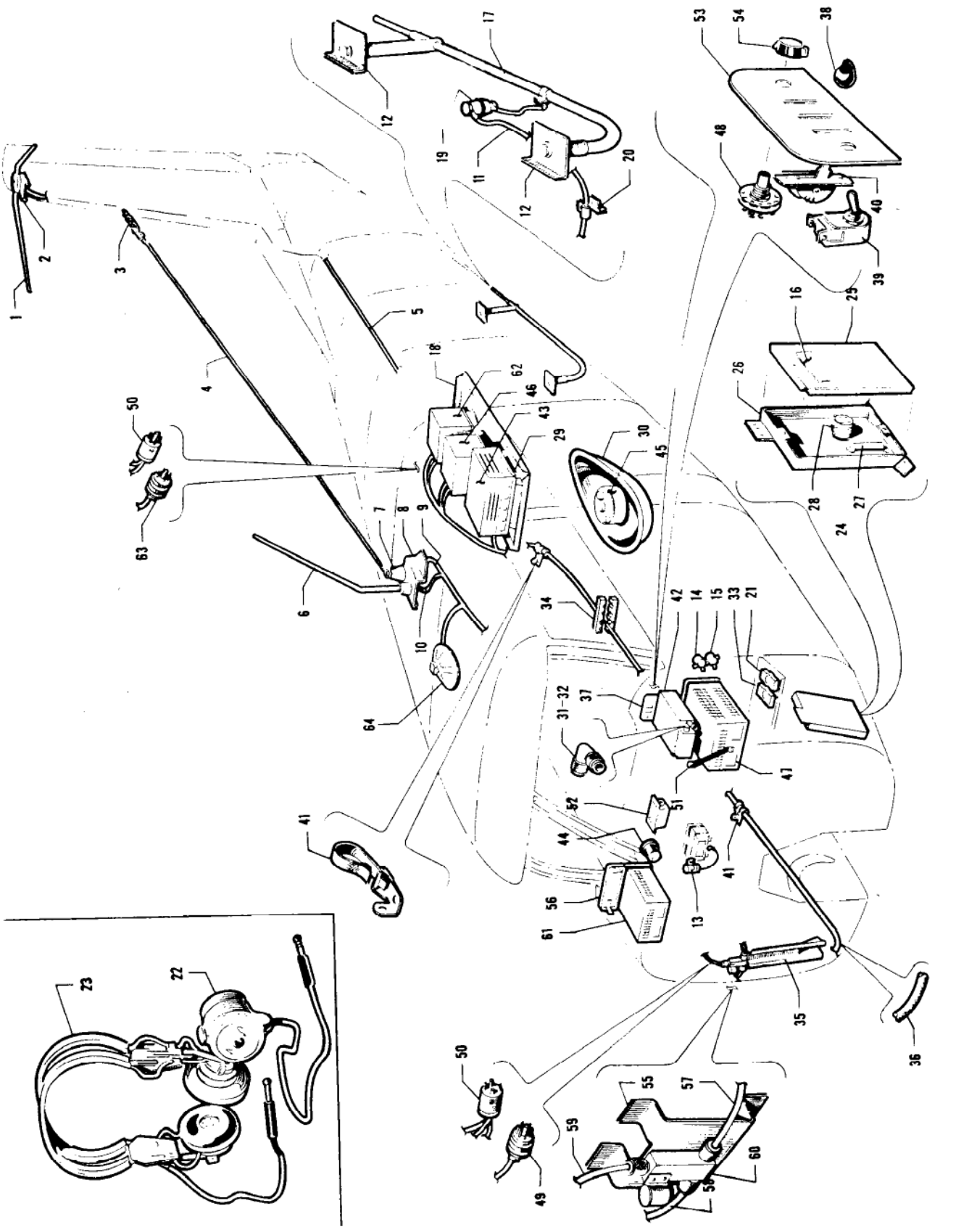

Figure 50. Super Custom Radio Installation
(Serial Nos. 24-1 to 24-2174, 24-2176 to 24-2298 inclusive)

Figure and Index Number	Part Number	Code	NOMENCLATURE	No. Req.	SERIAL NUMBERS AFFECTED
50-	21345		DRAWING - Radio Equipment Installation		
	21347		DRAWING - Omnigator Radio Installation		
	21348		DRAWING - Simplexer Radio Installation		
	21349		DRAWING - ADF-12 Radio Installation		
-1	19109-00		ANTENNA ASSEMBLY - Receiving	1	
-2	20389-00		PLATE - Receiving antenna mounting	1	
-3	17783-00		SPRING - L.F. Antenna	1	
-4	17953-05		ANTENNA ASSEMBLY - L.F.	1	
-5	14564-03		CABLE ASSEMBLY - Receiving antenna	1	
-6	451 272		ANTENNA ASSEMBLY - Transmitting	1	
-7	467 062		INSULATOR - (#135-42)	1	
-8	21307-00		BRACKET - Transmitting antenna mounting	1	
-9	14563-05		CABLE ASSEMBLY - L.F. lead in	1	
-10	14565-06		CABLE ASSEMBLY - Transmitting antenna lead in	1	
-11	21366-02		CABLE ASSEMBLY - Marker beacon lead in	1	
-12	21354-00		ANGLE - Marker beacon attachment	2	24-103 and up
-13	19286-00		CAPACITOR ASSEMBLY - Regulator	1	
-14	468 002		MIKE JACK - (S12B)	1	
-15	468 003		PHONE JACK - (#1)	1	
-16	20858-00		PLACARD - Terminal box	1	
-17	451 264		ANTENNA - Bent marker beacon	1	
-18	20536-00		SHELF ASSEMBLY - Radio power supply	1	24-103 and up
-19	467 063		INSULATOR - (#135-55)	1	
-20	18522-08		CLIP	1	24-1 to 24-102 inclusive
	21568-00		CLIP	1	24-103 and up
-21	454 648		CIRCUIT PROTECTOR - (PSM 5)	1	
-22	474 647		MICROPHONE - (Telephonics #RS-38A)	1	
	474 649		MICROPHONE - (TEL-66C)	1	
-23	464 327		HEADPHONE - (#P-23)	1	
-24	21370-00		BOX ASSEMBLY - Radio junction	1	
-25	19031-00		COVER - Radio junction box	1	
-26	21335-00		BOX ASSEMBLY - Radio junction	1	
-27	489 372		TRANSFORMER - (#A8101)	1	
-28	484 362		RELAY - (#GHA3C)	1	
-29	452 026	A	MOUNTING - Amplifier (12510-1)	1	
-30		AD	COVER - ADF loop	1	
-31	480 915	A	PLUG - (#83-756)	1	
-32	451 871	A	ADAPTER - (#83-168)	1	
-33	454 657	ABC	CIRCUIT PROTECTOR - (10 Amp) Wood	1	
-34	21329-00	A	BLOCK - Wire retaining	2	24-1 to 24-102 inclusive
	21329-02		BLOCK - Wire retaining	2	24-103 and up
-35	20862-00	A	CHANNEL - Wire harness cover	1	24-103 and up
-36	153 310	A	SHIELDING - (#692-D)	3'	

A - Used with ADF-12 installation.
B - Used with omnigator installation.
C - Used with simplexer installation.
D - Not available through Piper Aircraft Corporation. Secure from Lear, Inc., 11916 West Pico Blvd., Los Angeles, California.

When ordering, always specify Part Number, Description and Serial Number of Aircraft

Figure and Index Number	Part Number	Code	NOMENCLATURE	No. Req.	SERIAL NUMBERS AFFECTED
50-37	21355-00	AB	PLACARD - Radio switch	1	
-38	471 070	AC	KNOB - Switch (#KN-17)	2	
-39	487 790	AC	SWITCH - Toggle (#110-S-73)	1	
-40	487 821	AC	SWITCH - Phone (#SS-14-1L3S)	3	
-41			CLAMP - ADEL #668-12-6 FR	7	
-42		AD	TUNER - ADF-12		
-43		AD	AMPLIFIER - ADF-12		
-44		AD	INDICATOR - ADF-12		
-45		AD	LOOP ASSEMBLY - ADF-12		
-46		BE	POWER UNIT - Omni (V12MP-2A)	1	
-47		BE	TUNER - Omni (VTR-2) low band	1	
		BE	TUNER - Omni (VTR-2) high band	1	
-48	487 798	C	SWITCH - Transmitter (#3242J)	1	
-49	21357-02	B	CABLE ASSEMBLY - Omni power	1	
-50	480 950	BC	PLUG - (#91-MPF-6L)	2	
-51	21306-00	B	STRAP - Radio support	1	
-52	19079-00	BC	CONNECTOR ASSEMBLY - Tee, omni and simplexer antenna	1	
-53	20864-00	ABC	PLACARD - Radio switch	1	
-54	471 068	C	KNOB - Selector (#M88010-4)	1	
-55	21056-00	BC	BRACKET - Antenna relay support	1	
-56	21327-00	C	PANEL ASSEMBLY - Cover	1	
-57	21360-05	BC	CABLE ASSEMBLY - Antenna relay to omni	1	
-58	21360-04	BC	CABLE ASSEMBLY - Antenna relay to simplexer	1	
-59	21359-03	BC	CABLE ASSEMBLY - Antenna relay to antenna	1	
-60	484 361	BC	RELAY - Antenna (#8200)	1	
-61		CE	TUNER - Simplexer (VC-27)	1	
-62		CE	POWER UNIT - Simplexer (V12MP-2A)	1	
-63	21358-02	C	CABLE ASSEMBLY - Simplexer power	1	
-64	21879-00	F	SPEAKER ASSEMBLY	1	
-65	21878-00		GASKET - Speaker mounting, rubber	1	

A - Used with ADF-12 installation.
B - Used with omnigator installation.
C - Used with simplexer installation.
D - Not available through Piper Aircraft Corporation. Secure from Lear, Inc., 11916 West Pico Blvd., Los Angeles, California.
E - Not available through Piper Aircraft Corporation. Secure from National Aeronautical Corporation, Ambler, Pennsylvania.
F - Use rubber gasket, Part No. 21878-00, when replacing speaker mounted on wooden panel.

When ordering, always specify Part Number, Description and Serial Number of Aircraft

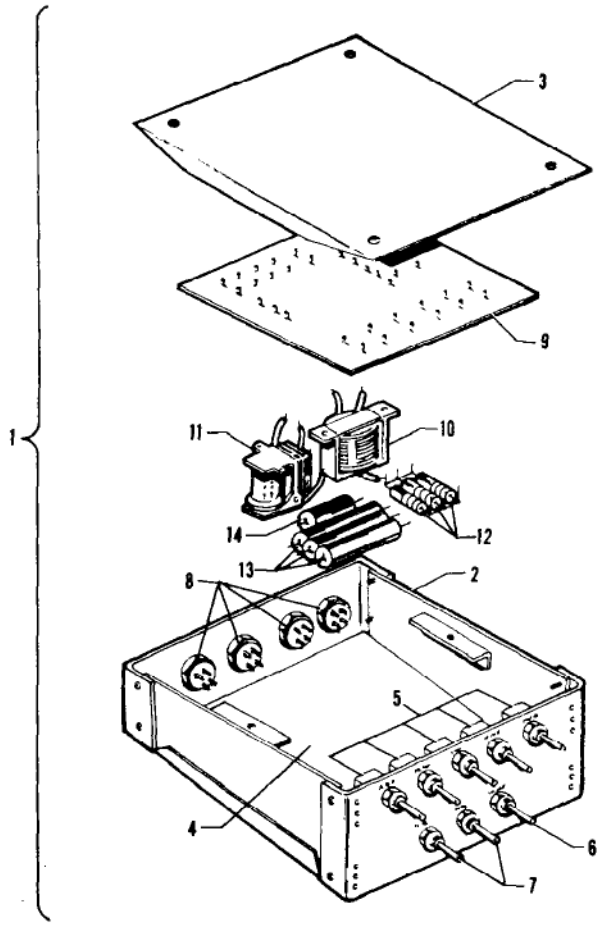

Figure 51. Radio Junction Boxes

Figure and Index Number	Part Number	Code	NOMENCLATURE	No. Req.	SERIAL NUMBERS AFFECTED
51-1	22329-00	C	BOX ASSEMBLY - Radio junction (complete)	1	
	23100-00	A	BOX ASSEMBLY - Radio junction (complete)	1	
	30310-00	B	BOX ASSEMBLY - Radio junction (complete)	1	
	23337-00	D	BOX ASSEMBLY - Radio junction (complete)	1	
	30960-04	E	BOX ASSEMBLY - Radio junction (complete)	1	
	30960-05	F	BOX ASSEMBLY - Radio junction (complete)	1	
	30960-06	G	BOX ASSEMBLY - Radio junction (complete)	1	
	30960-07	H	BOX ASSEMBLY - Radio junction (complete)	1	
	30960-02	I	BOX ASSEMBLY - Radio junction (complete)	1	
	30960-03	J	BOX ASSEMBLY - Radio junction (complete)	1	
	30960-08	K	BOX ASSEMBLY - Radio junction (complete)	1	
	30960-09	L	BOX ASSEMBLY - Radio junction (complete)	1	
	30960-10	M	BOX ASSEMBLY - Radio junction (complete)	1	
	30960-11	N	BOX ASSEMBLY - Radio junction (complete)	1	
	30960-12	O	BOX ASSEMBLY - Radio junction (complete)	1	
	30960-13	P	BOX ASSEMBLY - Radio junction (complete)	1	
	30960-14	Q	BOX ASSEMBLY - Radio junction (complete)	1	
	30960-15	R	BOX ASSEMBLY - Radio junction (complete)	1	
	30960-16	T	BOX ASSEMBLY - Radio junction (complete)	1	
	26088-03	V	BOX ASSEMBLY - Radio junction (complete)	1	
	26088-06	U	BOX ASSEMBLY - Radio junction (complete)	1	
	26088-07	S	BOX ASSEMBLY - Radio junction (complete)	1	
	26088-08	Y	BOX ASSEMBLY - Radio junction (complete)	1	
	26088-09	W	BOX ASSEMBLY - Radio junction (complete)	1	
	26088-12	X	BOX ASSEMBLY - Radio junction (complete)	1	
	26088-13	Z	BOX ASSEMBLY - Radio junction (complete)	1	

A - Used when the following radio combinations are installed on airplanes with serial numbers 24-2844 to 24-3284 inclusive: Marker Beacon, AutoNav with Mark V or Mark 10 or Marker Beacon, ADFT-12 with Mark V or Mark 10 or DME, Marker Beacon, Mark V, Mark 10 with AutoNav or ADFT-12.

B - Used when the following radio combinations are installed on airplanes with serial numbers 24-2511 to 24-3284 inclusive: Marker Beacon, AutoNav with one (1) or two (2) Mark V, or Marker Beacon, ADFT-12 with one (1) or two (2) Mark V.

C - Used when the following radio combinations are installed on airplanes with serial numbers 24-2175, 24-2299 to 24-2510 inclusive: Marker Beacon, AutoNav with one (1) or two (2) Mark V or Marker Beacon, ADFT-12 with one (1) or two (2) Mark V.

D - Used with radio installation, ADFT-12, Mark 10, Piper AutoNav and Marker Beacon, serial numbers 24-2844 to 24-3284.

E - Used with radio installation, Narco Dual Mark 12 with Marker Beacon.

F - Used with radio installation, Narco Dual Mark 12 with DME.

G - Used with radio installation, Narco Dual Mark 12 with DME and Marker Beacon, and Dual Mark 12A with ADF and Marker Beacon.

H - Used with radio installation, Narco Dual Mark 12 and Dual Mark 12A with ADF.

I - Used with radio installation, Narco Dual Mark 12 with Glide Slope, DME and Marker Beacon.

J - Used with radio installation, Narco Dual Mark 12 with Glide Slope and Marker Beacon, and Dual Mark 12A with ADF, Glide Slope and Marker Beacon.

K - Used with radio installation, Narco Single Mark 12 with Marker Beacon and Single Mark 12A with ADF and Marker Beacon.

L - Used with radio installation, Narco Single Mark 12 and Single Mark 12A with ADF.

M - Used with radio installation, Narco Single Mark 12 with DME.

N - Used with radio installation, Narco Single Mark 12 with DME and Marker Beacon.

O - Used with radio installation, Narco Single Mark 12 with Glide Slope and Single Mark 12A with ADF and Glide Slope.

P - Used with radio installation, Narco Single Mark 12 with Glide Slope and Marker Beacon and Single Mark 12A with ADF, Glide Slope and Marker Beacon.

Q - Used with radio installation, Narco Single Mark 12 with Glide Slope and DME.

R - Used with radio installation, Narco Single Mark 12 with Glide Slope, DME and Marker Beacon.

S - Used with radio installation, Narco Dual Mark 12A (less ADF).

T - Used with radio installation, Bendix ADFT-12B and Bendix ADFT-12C.

U - Used with radio installation, Narco Dual Mark 12A (less ADF), with Marker Beacon.

V - Used with radio installation, Narco Dual Mark 12A (less ADF), with Glide Slope and Marker Beacon.

W - Used with radio installation, Narco Single Mark 12A (less ADF).

X - Used with radio installation, Narco Single Mark 12A (less ADF) with Glide Slope.

Y - Used with radio installation, Narco Single Mark 12A (less ADF) with Marker Beacon.

Z - Used with radio installation, Narco Single Mark 12A (less ADF) with Glide Slope and Marker Beacon.

PILOTEN-SERVICE
Straubing LBA II-A-170
Tel:

Figure and Index Number	Part Number	Code	NOMENCLATURE	No. Req.	SERIAL NUMBERS AFFECTED
51-2	22326-00		BOX ASSEMBLY	1	24-2175, 24-2299 to 24-3284
	30953-00		BOX ASSEMBLY	1	24-3488 to 24-4782, 24-4784 to 24-4803 inclusive, 26-2 and up
-3	22327-02		COVER - Radio junction box, top	1	24-2175, 24-2299 to 24-3284
	30955-00		COVER - Radio junction box, top	1	24-3488 to 24-4782, 24-4784 to 24-4803 inclusive, 26-2 and up
-4	22327-03		COVER - Radio junction box, bottom	1	24-2175, 24-2299 to 24-3284
-5	487 829		SWITCH - (#8867K1)	AR	24-2175, 24-2299 to 24-3284
	487 848		SWITCH - (#12TS115-1)	AR	24-3488 to 24-4782, 24-4784 to 24-4803 inclusive, 26-2 and up
-6	487 834		SWITCH - (#8867K4)	1	24-2175, 24-2299 to 24-3284
	487 847		SWITCH - (#PA216-024)	1	24-3488 to 24-4782, 24-4784 to 24-4803 inclusive, 26-2 and up
-7	487 831		SWITCH - (#T2104)	AR	24-2175, 24-2299 to 24-3284
	487 846		SWITCH - (#SS-36-1-C5) (Black)	AR	24-3488 to 24-4782, 24-4784 to 24-4803 inclusive, 26-2 and up
	487 876		SWITCH - (#SS-36-1-C1) (Gray)	AR	24-3488 to 24-4782, 24-4784 to 24-4803 inclusive, 26-2 and up
-8	455 226		CONNECTOR - 7 point pin (#126-197)	1	
	455 228		CONNECTOR - 5 point pin (#126-216)	1	
	455 227		CONNECTOR - 7 point socket (#126-198)	1	
	455 229		CONNECTOR - 9 point socket (#126-221)	1	
-9	23060-00	AD	BOARD ASSEMBLY - Terminal (complete)	1	
	22358-00	C	BOARD ASSEMBLY - Terminal (complete)	1	
	30309-00	B	BOARD ASSEMBLY - Terminal (complete)	1	
-10	489 372		TRANSFORMER - (#8101)	1	
-11	484 365		RELAY - (#400-2515)	1	24-2175, 24-2299 to 24 3284
	484 372		RELAY - (#KHP17D11)		24-3488 to 24-4782, 24-4784 to 24-4803 inclusive, 26-2 and up
-12	484 384		RESISTOR - (2W330 OHM)	1	24-2175, 24-2299 to 24-3284
	484 395		RESISTOR - (2W220 OHM)	1	24-2175, 24-2299 to 24-3284
	484 396		RESISTOR - (2W150 OHM)	1	24-2175, 24-2299 to 24-3284

A - Used when the following radio combinations are installed on airplanes with serial numbers 24-2844 to 24-3284 inclusive: Marker Beacon, AutoNav with Mark V or Mark 10 or Marker Beacon, ADFT-12 with Mark V or Mark 10 or DME, Marker Beacon, Mark V, Mark 10 with AutoNav or ADFT-12.

B - Used when the following radio combinations are installed on airplanes with serial numbers 24-2511 to 24-3284 inclusive: Marker Beacon, AutoNav with one (1) or two (2) Mark V or Marker Beacon, ADFT-12 with one (1) or two (2) Mark V.

C - Used when the following radio combinations are installed on airplanes with serial numbers 24-2175, 24-2299 to 24-2510 inclusive: Marker Beacon, AutoNav with one (1) or two (2) Mark V or Marker Beacon, ADFT-12 with one (1) or two (2) Mark V.

D - Used with radio installation, ADFT-12, Mark 10, Piper AutoNav and Marker Beacon, serial numbers 24-2844 to 24-3284 inclusive.

Figure and Index Number	Part Number	Code	NOMENCLATURE	No. Req.	SERIAL NUMBERS AFFECTED
51-13	484 388	BC	RESISTOR - (2W 3.3 OHM)	AR	
	484 388		RESISTOR - (2W 3.3 OHM)	1	24-3488 to 24-4782, 24-4784 to 24-4803 inclusive, 26-2 and up
	484 410	AD	RESISTOR - (1W 560 OHM)	1	24-2175, 24-2299 to 24-3284
	484 410		RESISTOR - (1W 560 OHM)	1	24-3488 to 24-4782, 24-4784 to 24-4803 inclusive, 26-2 and up
-14	26156-00	ABD	CAPACITOR - (5 MFD, 50 VDC)	1	24-2175, 24-2299 to 24-3284
	26156-00		CAPACITOR - (5 MFD, 50 VDC)	1	24-3488 to 24-4782, 24-4784 to 24-4803 inclusive, 26-2 and up

A - Used when the following radio combinations are installed on airplanes with serial numbers 24-2844 to 24-3284 inclusive: Marker Beacon, AutoNav with Mark V or Mark 10 or Marker Beacon, ADFT-12 with Mark V or Mark 10 or DME, Marker Beacon, Mark V, Mark 10 with AutoNav or ADFT-12.

B - Used when the following radio combinations are installed on airplanes with serial numbers 24-2511 to 24-3284 inclusive: Marker Beacon, AutoNav with one (1) or two (2) Mark V or Marker Beacon, ADFT-12 with one (1) or two (2) Mark V.

C - Used when the following radio combinations are installed on airplanes with serial numbers 24-2175, 24-2299 to 24-2510 inclusive: Marker Beacon, AutoNav with one (1) or two (2) Mark V or Marker Beacon, ADFT-12 with one (1) or two (2) Mark V.

D - Used with radio installation, ADFT-12, Mark 10, Piper AutoNav and Marker Beacon, serial numbers 24-2844 to 24-3284 inclusive.

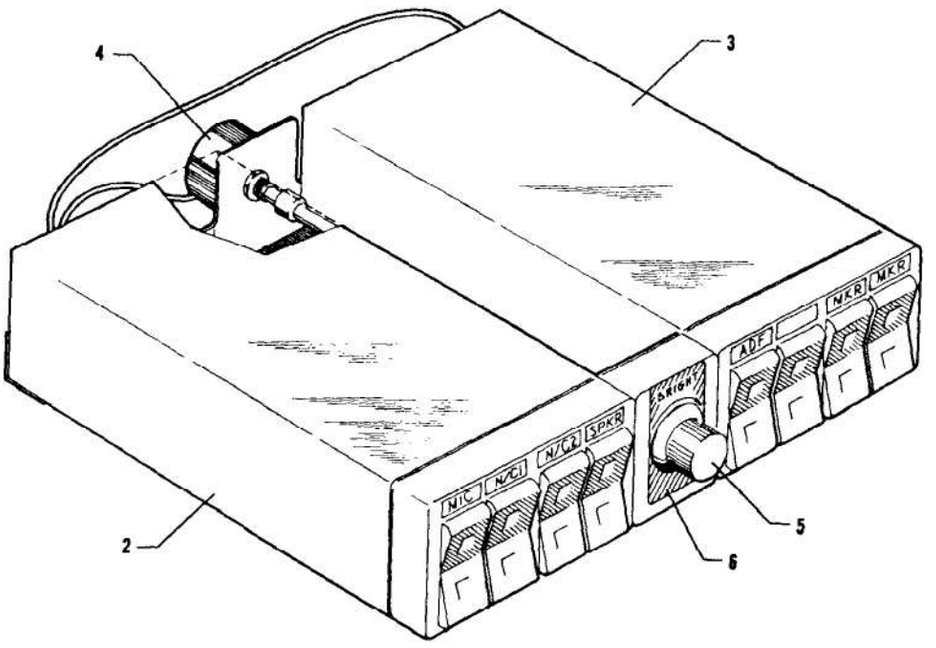

Figure 52. Radio Junction Boxes

Figure and Index Number	Part Number	Code	NOMENCLATURE	No. Req.	SERIAL NUMBERS AFFECTED
52-1	32671-09	AJ	BOX ASSEMBLY - Radio junction (complete)	1	
	32671-10	BJ	BOX ASSEMBLY - Radio junction (complete)	1	
	32671-11	CJ	BOX ASSEMBLY - Radio junction (complete)	1	
	32671-12	DJ	BOX ASSEMBLY - Radio junction (complete)	1	
	32671-13	EH	BOX ASSEMBLY - Radio junction (complete)	1	
	32671-14	BH	BOX ASSEMBLY - Radio junction (complete)	1	
	32671-15	G	BOX ASSEMBLY - Radio junction (complete)	1	
	32671-16	FH	BOX ASSEMBLY - Radio junction (complete)	1	
	32671-17	AH	BOX ASSEMBLY - Radio junction (complete)	1	
-2	596 071	K	NARCOMASTER UNIT - (#VP-22A2)	1	
-3	596 072	K	NARCOMASTER UNIT - (#VP-22B1)	1	
-4	484 585		RHEOSTAT - (#E-100-R1-352)	1	
-5	571 114		KNOB - (#1-103D)	1	
-6	32766-00		PLACARD - Rheostat control	1	

A - Used with Mark 12B and Mark 16 Dual Radios with ADF.
B - Used with Mark 12B and Mark 16 Dual Radios less ADF.
C - Used with Mark 12B and Mark 16 Single Radios with ADF.
D - Used with Mark 12B and Mark 16 Single Radios with ADF.
E - Used with Single Mark 12B less ADF.
F - Used with Single Mark 12B with ADF, Single Mark 16 less ADF, and Single Mark 16 with ADF.
G - Used with Bendix ADFT-12C and Narco ADF-31A Radios.
H - Not used if Marker Beacon is installed.
J - Used if Marker Beacon is installed.
K - Individual switches must be ordered from an authorized Narco Sales and Service Dealer.

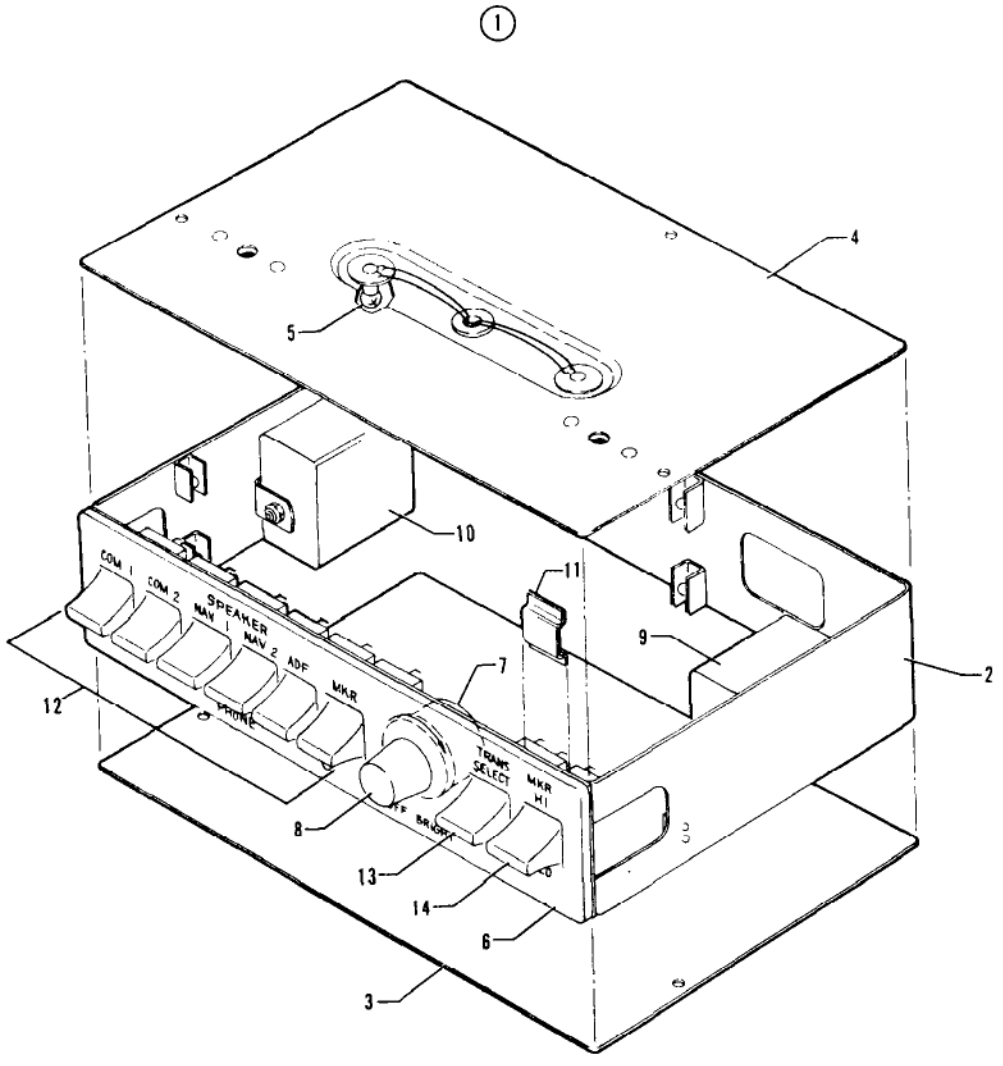

Figure 52A. Radio Junction Boxes

Figure and Index Number	Part Number	Code	NOMENCLATURE	No. Req.	SERIAL NUMBERS AFFECTED
52A-1	33237-02	AF	BOX ASSEMBLY - Radio junction (complete)	1	
	33237-03	AG	BOX ASSEMBLY - Radio junction (complete)	1	
	33237-04	BG	BOX ASSEMBLY - Radio junction (complete)	1	
	33237-05	CG	BOX ASSEMBLY - Radio junction (complete)	1	
	33237-06	DG	BOX ASSEMBLY - Radio junction (complete)	1	
	33237-11	BF	BOX ASSEMBLY - Radio junction (complete)	1	
	33237-12	CF	BOX ASSEMBLY - Radio junction (complete)	1	
	33237-13	E	BOX ASSEMBLY - Radio junction (complete)	1	
	33237-14	DF	BOX ASSEMBLY - Radio junction (complete)	1	
-2	33224-00		BOX ASSEMBLY - Radio junction	1	
-3	33227-00		BOTTOM - Junction box	1	
-4	33232-00		LID ASSEMBLY - Junction box (complete)	1	
-5	472 064		LAMP - (PS10008-348)	2	
-6	33229-02		PLACARD - Junction box	1	
-7	484 585		RHEOSTAT - (#E-100-R1-352)	1	
-8	571 127		KNOB - (#1-525-D)	1	
-9	484 214		RELAY - (#T154-4C-12VDC)	1	
-10	484 193	H	RELAY - (#R10-E1-Y2-V185-12VDC)	1	
-11	33234-00		COVER - Switch	AR	
-12	587 867		SWITCH - (#SC3BX18-1)	6	
-13	587 868		SWITCH - (#SC4CW18-1)	1	
-14	587 869	J	SWITCH - (#SC4CW18-2)	1	

A - Used with Narco Single COM 11A Radios less ADF.
B - Used with Narco Single COM 11A Radios with ADF.
C - Used with Narco Dual COM 11A Radios less ADF.
D - Used with Narco Dual COM 11A Radios with ADF.
E - Used with Narco ADF-31A, King KR-85 and Bendix Radio Installations with ADF.
F - Used with or without Glide Slope and without Marker Beacon.
G - Used with Marker Beacon or Marker Beacon and Glide Slope.
H - Used only if Narco Dual Radios are installed.
J - Used only if Piper Marker Beacon is installed.

When ordering, always specify Part Number, Description and Serial Number of Aircraft

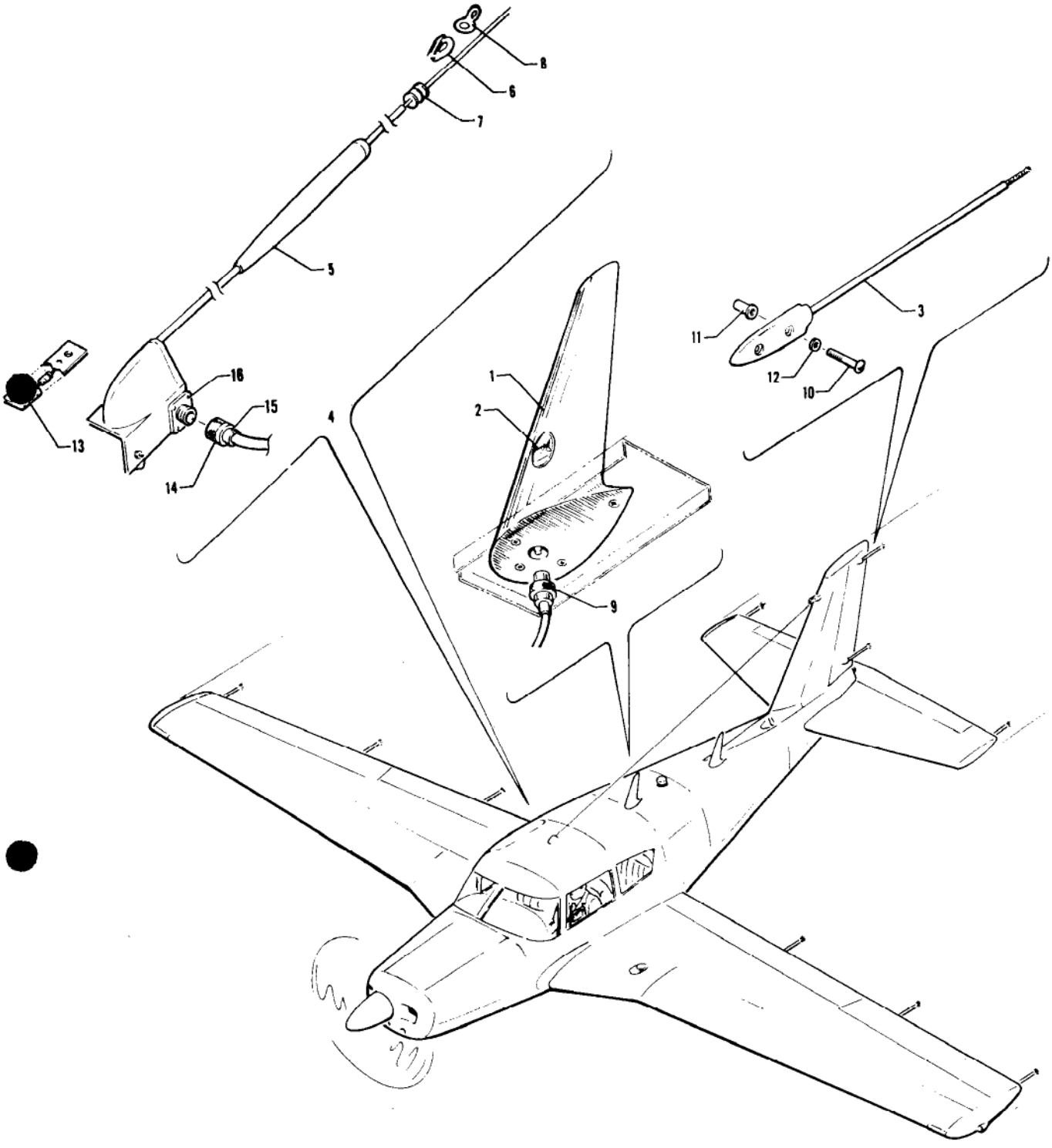

Figure 53. All Weather Antenna Installation

Figure and Index Number	Part Number	Code	NOMENCLATURE	No. Req.	SERIAL NUMBERS AFFECTED
53-	25043		DRAWING - All Weather Antenna Installation		
-1	451 800		ANTENNA ASSEMBLY - Broad band	2	
-2	456 388		DECAL - Antenna	2	
-3	494 667		WICK - Static (SW101A) Vinyl cover	10	
	481 360		PROBE - Airaid (CM14) Braided cover	10	
-4	31614-00		ANTENNA ASSEMBLY - Sense	1	
-5	451 801		ANTENNA ASSEMBLY - Sense	1	
-6	40111-00		THIMBLE - Sense antenna	1	
-7	486 879		SLEEVE - Sense antenna (#28-1-C)	1	
-8	486 562		SHACKLE - Sense antenna (MS20115-2)	1	
-9	581 043		PLUG KIT - (#2329082-1) Aft antenna	1	
	460 783		FITTING - (#UG913/U) Forward antenna	1	
-10	415 520		SCREW - (MS35206-230)	20	
-11	406 848		RIVNUT - (#A6K75)	20	
-12	407 041		WASHER - Lock (MS35338-41)	20	
-13	24227-03		CHOKE ASSEMBLY	1	
-14	480 997		PLUG - (#83-1SP)	1	
	451 905	A	ADAPTER - (UG-273/U)	1	
-15	581 753	A	PLUG - (2-329085-2)	1	
-16	481 002		PLUG - (83-1R)	1	

A - Used when King ADF Co-ax Cable is installed.

When ordering, always specify Part Number, Description and Serial Number of Aircraft

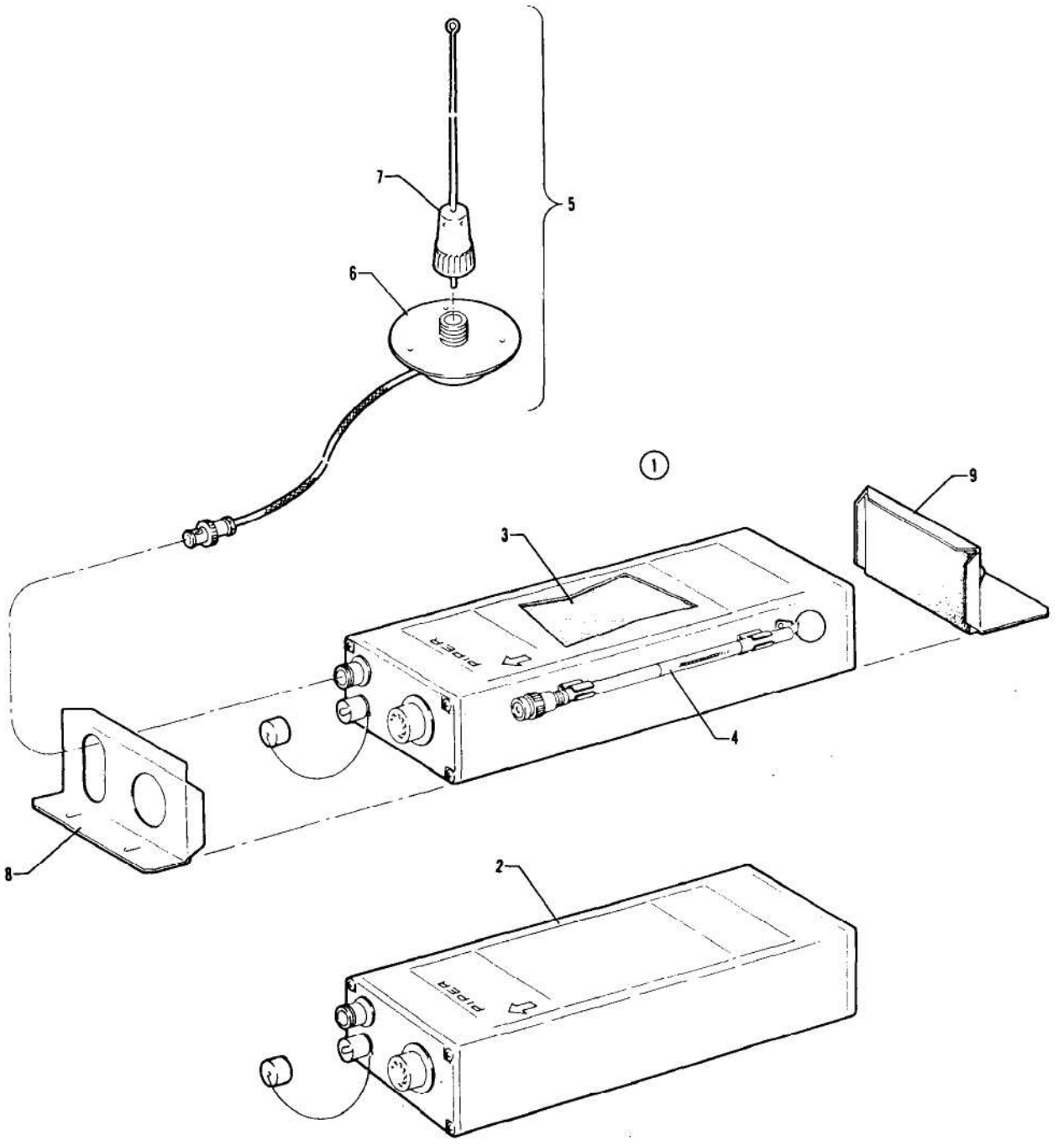

Figure 53A. Piper Automatic Locator (ELT) Installation

Figure and Index Number	Part Number	Code	NOMENCLATURE	No. Req.	SERIAL NUMBERS AFFECTED
53A-	27326		DRAWING - Piper Automatic Locator (ELT) Installation		
-1	756 398		TRANSMITTER ASSEMBLY - Automatic locator (includes battery pack and telescopic antenna)	1	
-2	756 399		TRANSMITTER ASSEMBLY - Automatic locator (less battery pack and telescopic antenna)	1	
-3	758 209		BATTERY PACK - Transmitter assembly	1	
-4	751 316		ANTENNA ASSEMBLY - Telescopic	1	
-5	751 317		ANTENNA ASSEMBLY - Whip (includes cable and base)	1	
-6	751 318		CABLE AND BASE ASSEMBLY - Whip antenna	1	
-7	751 319		ANTENNA ASSEMBLY - Whip (less cable and base)	1	
-8	758 210		BRACKET - Forward transmitter mounting	1	
-9	758 211		BRACKET ASSEMBLY - Aft transmitter mounting (includes lock knob)	1	

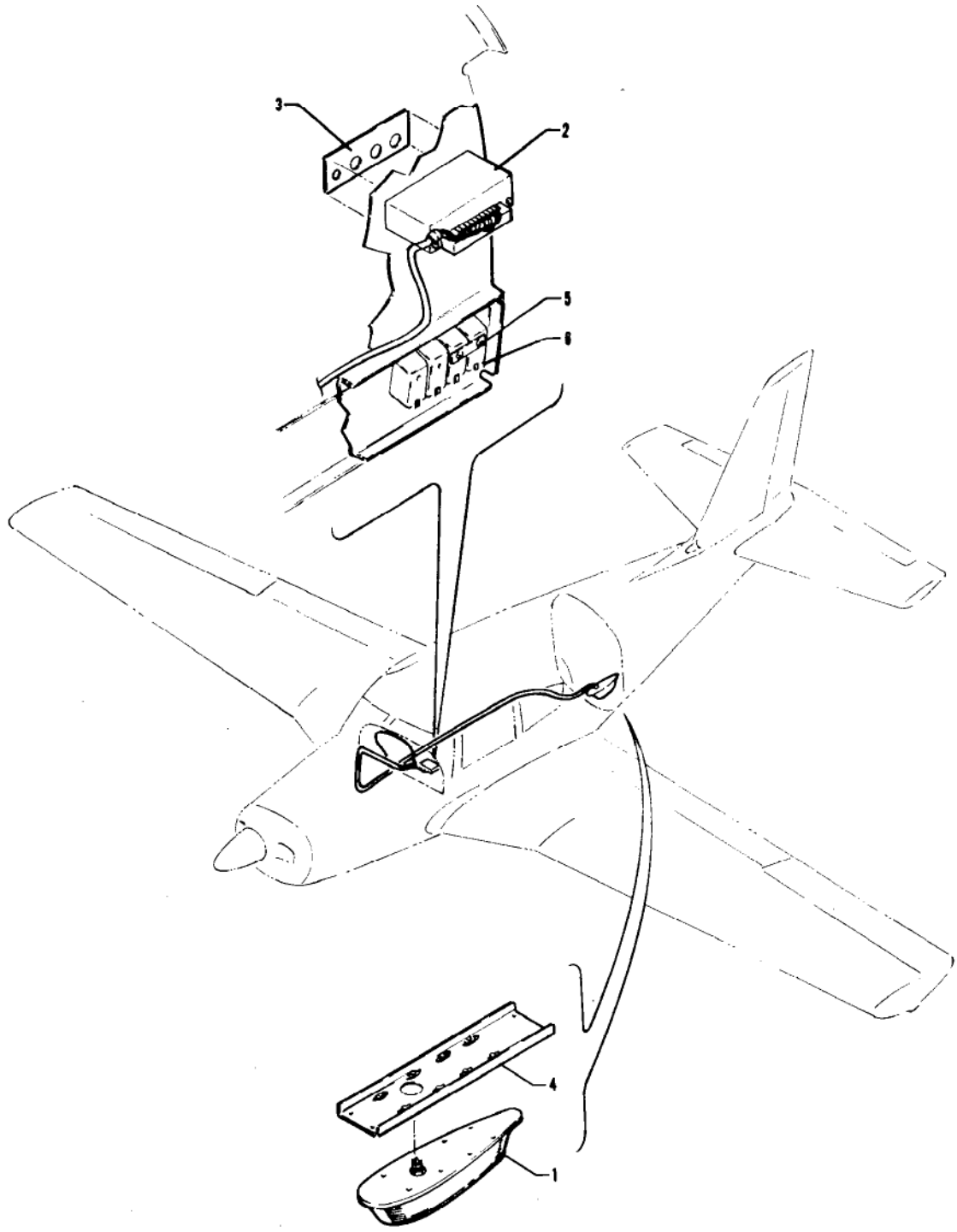

Figure 54. Piper PM-1 Marker Beacon Installation

Figure and Index Number	Part Number	Code	NOMENCLATURE	No. Req.	SERIAL NUMBERS AFFECTED
54-	24874	AD	DRAWING - Piper PM-1 Marker Beacon Installation		
	26854	BV	DRAWING - Piper PM-1 Marker Beacon Installation		24-4783, 24-4804 and up
	26914	CV	DRAWING - Piper PM-1 Marker Beacon Installation		24-4783, 24-4804 and up
-1	551 216		RECEIVER - Marker Beacon (#1-950005)	1	
-2	551 233	D	PANEL ASSEMBLY - Marker beacon control (#-950012)	1	
	32408-00	B	PANEL ASSEMBLY - Marker beacon control	1	24-4783, 24-4804 and up
	32408-02	C	PANEL ASSEMBLY - Marker beacon control	1	24-4783, 24-4804 and up
-3	24682-00	D	PLACARD - Marker beacon (581 061)	1	
	26548-02	B	PLACARD - Marker beacon (581 479)	1	24-4783, 24-4804 and up
	26548-04	C	PLACARD - Marker beacon test switch (581 529)	1	24-4783, 24-4804 and up
-4	24872-00		BRACKET ASSEMBLY - Marker beacon mounting	1	
-5	31506-02	D	BAR - Bus	1	
	16439-00		BAR - Bus	1	24-4783, 24-4804 and up
-6	454 656		CIRCUIT PROTECTOR - (#109-205-102)	1	

A - Used with Mark 12 and Mark 12A Radio Installation.
B - Used with Mark 12B Radio Installation if Trim Panel Indicator Lights are installed.
C - Used with Mark 16 or Mark 12B Radio Installation if VOA-50M Omni Converter, which incorporates indicator lights, is installed.
D - Used on PA-24-180 and PA-24-250 with serial numbers 24-3488 and up, PA-24-260 with serial numbers 24-3642, 24-4000 to 24-4782 inclusive, 24-4784 to 24-4803 inclusive, and PA-24-400 with serial numbers 26-2 and up.
V - Used on PA-24-260 airplanes only.

Straubing LBA II A-1
Telefon (09421) 21

Figure and Index Number	Part Number	Code	NOMENCLATURE	No. Req.	SERIAL NUMBERS AFFECTED
	22430	AXY	DRAWING - Radio installation, Piper AutoNav, Mark V, ADF12E-2, Marker Beacon with converter		24-2175, 24-2299 to 24-3284
	22420	BXY	DRAWING - Radio installation, Piper AutoNav, Mark V, ADF12E-2, Marker Beacon with converter		24-2175, 24-2299 to 24-3284
	22329	XY	DRAWING - Narco junction box		24-2175, 24-2299 to 24-2510
	30183	XY	DRAWING - Wiring diagram, Narco junction box		24-2175, 24-2299 to 24-2510
	30310	XY	DRAWING - Narco junction box		24-2511 to 24-3284 inclusive
	30307	XY	DRAWING - Wiring diagram, Narco junction box		24-2511 to 24-3284 inclusive
	22429	XY	DRAWING - Radio installation, ADF12E-2		24-2175, 24-2299 to 24-2843
	22390	XY	DRAWING - Radio installation with Piper AutoNav, VHT-3 Superhomer		24-2175, 24-2299 to 24-3284
	22505	XY	DRAWING - Sunair radio installation		24-2175, 24-2299 to 24-3284
	23080	XY	DRAWING - Radio installation ADFT-12, Mark 10, Piper AutoNav, Marker Beacon		24-2844 to 24-3284 inclusive
	23337	XY	DRAWING - Junction box		24-2844 to 24-3284 inclusive
	23338	XY	DRAWING - Wiring diagram, junction box		24-2844 to 24-3284 inclusive
	22920	XY	DRAWING - Radio installation, Piper AutoNav, Mark V ADFT-12, Marker Beacon		24-2844 to 24-3284 inclusive
	23100	XY	DRAWING - Junction box		24-2844 to 24-3284 inclusive
	23065	XY	DRAWING - Wiring diagram, junction box		24-2844 to 24-3284 inclusive
	22910	XY	DRAWING - Radio installation, DME, ADFT-12, Mark V, AutoNav, Mark 10, Marker Beacon		24-2844 to 24-3487 inclusive
	22915	XY	DRAWING - Radio installation with Piper AutoNav, Superhomer		24-2844 to 24-3627 inclusive
	24271		DRAWING - Radio installation, Piper AutoNav & PTR-1		24-3628 and up, 26-2 and up
	23380	XY	DRAWING - Radio installation, Piper AutoNav, Mark V, ADFT-12B, Marker Beacon		24-3285 to 24-3487 inclusive
	23381	XY	DRAWING - Radio installation, Piper AutoNav, Mark 10, ADFT-12B, Marker Beacon		24-3285 to 24-3487 inclusive
	23392	XY	DRAWING - Radio installation, Motorola ADFT-12		24-3285 and up
	24190		DRAWING - Radio installation, Narco, Dual Mark 12		24-3488 to 24-4350, 26-2 and up
	25636	V	DRAWING - Radio installation, Narco, Dual Mark 12A (with ADF)		24-4351 to 24-4782 inclusive, 24-4784 to 24-4803 inclusive
	30960	D	DRAWING - Junction box		
	31124	D	DRAWING - Wiring diagram, junction box		
	24224	XY	DRAWING - Mark 12, Piper AutoNav, Motorola ADFT-12B		24-3488 and up
	24188		DRAWING - Narco Marker Beacon Installation		
	24874	D	DRAWING - Piper PM-1 Marker Beacon Installation		
	24917	C	DRAWING - Radio installation, Narco DME		
	23075	Z	DRAWING - Radio installation, Narco DME with range - power unit		

A - Used without Mark VI.
B - Used with Mark VI.
C - Used on PA-24-180 with serial numbers 24-3488 and up, PA-24-260 with serial numbers 24-3642, 24-4000 to 24-4782, 24-4784 to 24-4803 inclusive, and PA-24-400 with serial numbers 26-2 and up.
D - Used on PA-24-180 and PA-24-250 with serial numbers 24-3488 and up, PA-24-260 with serial numbers 24-3642, 24-4000 to 24-4782, 24-4784 to 24-4803 incl., and PA-24-400 with serial numbers 26-2 and up.
V - Used on PA-24-260 airplanes only.
X - Used on PA-24-180 airplanes only.
Y - Used on PA-24-250 airplanes only.
Z - Used on PA-24-400 airplanes only.

Figure and Index Number	Part Number	Code	NOMENCLATURE	No. Req.	SERIAL NUMBERS AFFECTED
	24375	VZ	DRAWING - Radio Installation, Glide Slope		24-3642, 24-4000 to 24-4350, 26-2 and up
	25635	V	DRAWING - Radio Installation, Narco, Glide Slope		24-4351 and up
	24413	VZ	DRAWING - Radio Installation, Narco, Mark 12, ADFT-12B, VOA-4 or VOA-5		24-3642, 24-4000 to 24-4350, 26-2 and up
	25631	V	DRAWING - Radio Installation, Narco, Single Mark 12A (with ADF)		24-4351 to 24-4782 inclusive, 24-4784 to 24-4803 inclusive
	25040	VZ	DRAWING - Radio Installation, Bendix ADFT-12C		24-3642, 24-4000 to 24-4782 incl., 24-4784 to 24-4803, 26-2 and up
	25608	V	DRAWING - Radio Installation, Narco ADF-31		24-3642, 24-4000 to 24-4720 incl.
	26337	V	DRAWING - Radio Installation, Narco ADF-31A		24-4721 to 24-4782 inclusive, 24-4784 to 24-4803 inclusive
	30960	B	DRAWING - Junction Box		
	31124	B	DRAWING - Wiring diagram, junction box		
	26086	A	DRAWING - Radio Installation, Narco, Dual Mark 12A (less ADF)		
	26088	A	DRAWING - Junction Box		
	26083	A	DRAWING - Junction Box Wiring Diagram		
	26087	A	DRAWING - Radio Installation		
	26088	A	DRAWING - Junction Box		
	26083	A	DRAWING - Junction Box Wiring Diagram		
	26087	A	DRAWING - Radio Installation, Narco, Single Mark 12A (less ADF)		
	26088	A	DRAWING - Junction Box		
	26083	A	DRAWING - Junction Box Wiring Diagram		
	26906	V	DRAWING - Radio Installation, Narco, Single Mark 16 (with ADF)		24-4783, 24-4804 to 24-5018 incl.
	26907	V	DRAWING - Radio Installation, Narco, Single Mark 16 (less ADF)		24-4783, 24-4804 to 24-5018 incl.
	26904	V	DRAWING - Radio Installation, Narco, Dual Mark 16 (with ADF)		24-4783, 24-4804 to 24-5018 incl.
	26905	V	DRAWING - Radio Installation, Narco, Dual Mark 16 (less ADF)		24-4783, 24-4804 to 24-5018 incl.
	26850	V	DRAWING - Narco ADF Installation		24-4783, 24-4804 to 24-5018 incl.
	26826	V	DRAWING - Bendix ADF Installation		24-4783, 24-4804 to 24-5018 incl.
	26903	V	DRAWING - Narco Glide Slope Installation		24-4783, 24-4804 to 24-5018 incl.
	32671	V	DRAWING - Junction Box Assembly		24-4783, 24-4804 to 24-5018 incl.
	26812	V	DRAWING - Radio Installation, Narco DME		24-4783, 24-4804 to 24-5018 incl.
	27292	V	DRAWING - DME Installation, King (KN60C)		24-5019 and up
	26856	V	DRAWING - Radio Installation, Bendix ADFT-12C		24-4783, 24-4804 to 24-5018 incl.
	26857	V	DRAWING - Radio Installation, Narco ADF-31A		24-4783, 24-4804 to 24-5018 incl.
	32671	V	DRAWING - Junction Box Assembly		24-4783, 24-4804 to 24-5018 incl.

A - Used on PA-24-260 with serial numbers 24-3642, 24-4000 to 24-4782, 24-4784 to 24-4803 inclusive.
B - Used on PA-24-260 with serial numbers 24-3642, 24-4000 to 24-4782, 24-4784 to 24-4803 inclusive, and PA-24-400 with serial numbers 26-2 and up.
V - Used on PA-24-260 airplanes only.
Z - Used on PA-24-400 airplanes only.

Figure and Index Number	Part Number	Code	NOMENCLATURE	No. Req.	SERIAL NUMBERS AFFECTED
	26688	V	DRAWING - Narco Transponder Installation (UAT-1) (with UTC-1 Control Unit)		24-4783, 24-4804 to 24-4862, 24-4864 to 24-4866 inclusive
	26894	V	DRAWING - Narco Transponder Installation (AT6-A)		24-4783, 24-4804 to 24-5018 incl.
	27007	V	DRAWING - Narco Transponder Installation (UAT-1) (with UTC-2 Control Unit)		24-4863, 24-4867 to 24-4981 incl.
	27215	V	DRAWING - Narco Transponder Installation (AT5-A)		24-4982 to 24-5022 inclusive
	27272	V	DRAWING - Narco Transponder Installation (AT-50)		24-5023 and up
	26944	V	DRAWING - Radio Installation, Narco Single Mark 12B (with ADF)		24-4783, 24-4804 to 24-5018 incl.
	26945	V	DRAWING - Radio Installation, Narco Single Mark 12B (less ADF)		24-4783, 24-4804 to 24-5018 incl.
	26946	V	DRAWING - Radio Installation, Narco Dual Mark 12B (with ADF)		24-4783, 24-4804 to 24-5018 incl.
	26947	V	DRAWING - Radio Installation, Narco Dual Mark 12B (less ADF)		24-4783, 24-4804 to 24-5018 incl.
	26850	V	DRAWING - Narco ADF Installation		24-4783, 24-4804 to 24-5018 incl.
	26826	V	DRAWING - Bendix ADF Installation		24-4783, 24-4804 to 24-5018 incl.
	26942	V	DRAWING - Narco Glide Slope Installation		24-4783, 24-4804 to 24-5018 incl.
	32671	V	DRAWING - Junction Box Assembly		24-4783, 24-4804 to 24-5018 incl.
	27218	V	DRAWING - Radio Installation, King, KR-85 ADF		24-4977 to 24-5018 inclusive
	32671	V	DRAWING - Junction Box Assembly		24-4977 to 24-5018 inclusive
	27294	V	DRAWING - Narco Transponder Installation (AT6-A)		24-5019 and up
	27281	V	DRAWING - Radio Installation, King (KR-85 ADF)		24-5019 and up
	33237	V	DRAWING - Junction Box Assembly		24-5019 and up
	27286	V	DRAWING - Radio Installation, Narco (ADF-31A)		24-5019 and up
	33237	V	DRAWING - Junction Box Assembly		24-5019 and up
	27287	V	DRAWING - Radio Installation, Bendix ADF		24-5019 and up
	33237	V	DRAWING - Junction Box Assembly		24-5019 and up
	27300	V	DRAWING - Radio Installation, Narco Single COM 11A (less ADF)		24-5019 and up
	27301	V	DRAWING - Radio Installation, Narco Single COM 11A (with ADF)		24-5019 and up
	27302	V	DRAWING - Radio Installation, Narco Dual COM 11A (less ADF)		24-5019 and up
	27303	V	DRAWING - Radio Installation, Narco Dual COM 11A (with ADF)		24-5019 and up
	33237	V	DRAWING - Junction Box Assembly		24-5019 and up
	27297	V	DRAWING - Narco Glide Slope Installation		24-5019 and up
	27298	V	DRAWING - Piper Marker Beacon Installation		24-5019 and up
	27284	V	DRAWING - Narco ADF Installation		24-5019 and up
	27285	V	DRAWING - Bendix ADF Installation		24-5019 and up

V - Used on PA-24-260 airplanes only.

Figure and Index Number	Part Number	Code	NOMENCLATURE	No. Req.	SERIAL NUMBERS AFFECTED
			REPAIR KITS		
	754 182	XY	BRAKE SYSTEM SEALS		24-1 to 24-2174 inclusive, 24-2176 to 24-2298 inclusive
	754 232		HI-SHEAR RIVET AND TOOL		
	754 415	AXY	LANDING GEAR BOLT AND NUT		
	756 787	VZ	LANDING GEAR NUT AND BOLT		
	754 184	XY	LANDING GEAR BUSHINGS		
	756 786	VZ	LANDING GEAR BUSHINGS		
	754 183	VXY	LANDING GEAR "O" RINGS AND SEALS		
	756 789	Z	LANDING GEAR "O" RINGS AND SEALS		
	754 186	X	PROPELLER REPAIR - Hartzell (HC-92-ZK-8D)		
	754 187	XY	PROPELLER REPAIR - McCauley (2D36C14 and 2D36C28)		
	754 218	XY	PROPELLER REPAIR - Hartzell (HC-A2XK-1)		
	756 792	Z	PROPELLER REPAIR - Hartzell (HC-A3XK-4)		
	756 892	V	PROPELLER REPAIR - Hartzell (HC-C2YK-1A, HC-C2YK-1B and HC-C2YR-1B)		
	754 321		FUEL CELL REPAIR KIT		
	754 359	VXY	BRAKE SYSTEM SEALS KIT		24-2175, 24-2299 and up
	756 788	Z	BRAKE SYSTEM SEALS KIT		
	760 205	VYZ	FUEL PUMP REPAIR KIT (Motor Driven Pump)		
	26348-00		TORQUE WRENCH ADAPTER - Landing Gear Retraction		24-1 to 24-4782 inclusive, 24-4784 to 24-4803 inclusive
	26347-00	V	TORQUE WRENCH ADAPTER - Landing Gear Retraction		24-4783, 24-4804 and up
			OPTIONAL EQUIPMENT KITS		
	754 188		ROTATING BEACON INSTALLATION (less beacon)		
	452 402		ROTATING BEACON		
	754 189		HEATED PITOT TUBE INSTALLATION		
	754 272	VXY	STABILATOR GUARD INSTALLATION		
	754 356	BC	DRY VACUUM PUMP INSTALLATION		
	760 307	V	DRY VACUUM PUMP INSTALLATION		24-4720 and up
	754 360	XY	PIPER AUTONAV (PRC-3)		
	754 361	Y	AUXILLIARY FUEL SYSTEM		24-2299 to 24-2843 inclusive,
	754 354	X	OIL FILTER INSTALLATION		24-1 to 24-2174 inclusive, 24-2176 to 24-2298 inclusive
	754 355	Y	OIL FILTER INSTALLATION		24-1 to 24-2174 inclusive, 24-2176 to 24-2298 inclusive
	754 337	XY	CABIN FRESH AIR MODIFICATION KIT		24-1 to 24-1329 inclusive

A - This Kit is a more complete bolt and nut kit and replaces Kit 754 185.
B - When installing on PA-24-180, secure Part No. 450 380 Vacuum Pump Drive Kit in addition to Kit 754 356.
C - Used on PA-24-260 with serial numbers 24-3642, 24-4000 to 24-4719 inclusive, and PA-24-180, PA-24-250 and PA-24-400 airplanes.
V - Used on PA-24-260 airplanes only.
X - Used on PA-24-180 airplanes only.
Y - Used on PA-24-250 airplanes only.
Z - Used on PA-24-400 airplanes only.

Figure and Index Number	Part Number	Code	NOMENCLATURE	No. Req.	SERIAL NUMBERS AFFECTED
			OPTIONAL EQUIPMENT KITS (cont.)		
	754 436	BKXY	WINDOW CURTAINS - (Tan)		
	754 437	BKXY	WINDOW CURTAINS - (Gray)		
	754 482	BKXY	WINDOW CURTAINS - (White)		
	754 483	BKXY	WINDOW CURTAINS - (Green)		
	756 751	K	WINDOW CURTAINS - (Champagne)		24-2844 to 24-4246, 24-4248 to 24-4299 inclusive, 26-2 and up
	754 435		WINDOW CURTAINS INSTALLATION		24-2844 to 24-4246, 24-4248 to 24-4299 inclusive, 26-2 and up
	756 970	DG	WINDOW CURTAINS - (White)		
	760 256	VJ	WINDOW CURTAINS - (Beige)		24-4783, 24-4804 and up
	760 257	VJ	WINDOW CURTAINS - (Ivory)		24-4783, 24-4804 and up
	760 258	VJ	WINDOW CURTAINS - (White)		24-4783, 24-4804 and up
	756 971	F	WINDOW CURTAINS INSTALLATION		
	760 255	V	WINDOW CURTAINS INSTALLATION - (Less Curtains)		24-4783, 24-4804 and up
	754 469	X	CYLINDER HEAD TEMPERATURE GAUGE INSTALLATION		24-2299 and up
	754 474	CH	CYLINDER HEAD TEMPERATURE GAUGE INSTALLATION		
	756 700	Y	ENGINE FUEL PUMP MODIFICATION - (PA-24 Fuel Injection)		
	756 721	Y	CARBURETOR AIR TEMPERATURE GAUGE		24-2299 and up
	756 781	AE	EXTERNAL POWER RECEPTACLE INSTALLATION		
	756 979	AG	EXTERNAL POWER RECEPTACLE INSTALLATION		
	760 308	AV	EXTERNAL POWER RECEPTACLE INSTALLATION		24-4783, 24-4804 and up
	62355-02		EXTERNAL POWER CONNECTOR PLUG ASSEMBLY		24-2299 and up, 26-2 and up

A - Less Power Connector Plug Assembly, Part No. 62355-02.
B - Used on Palm Beach only.
C - This Kit is less right instrument cover panel. Order panel 22732-02 for PA-24-250 fuel injection model or panel 23015-00 for PA-24-250 carburetor model. Order panel 23218-00 for PA-24-260 fuel injection model or panel 23217-00 for PA-24-260 carburetor model with serial numbers 24-3642, 24-4000 to 24-4246, 24-4248 to 24-4299 inclusive. Order panel 25555-03 for PA-24-260 fuel injection model or panel 25555-05 for PA-24-260 carburetor model with serial numbers 24-4247, 24-4300 to 24-4782, 24-4784 to 24-4803.
D - Less installation Kit 756 971.
E - Used on PA-24-180, PA-24-250 and PA-24-260 with serial numbers 24-2299 to 24-4246, 24-4248 to 24-4299 inclusive, and PA-24-400.
F - Used on PA-24-260 with serial numbers 24-3642, 24-4000 to 24-4782, 24-4784 to 24-4803 inclusive.
G - Used on PA-24-260 with serial numbers 24-4247, 24-4300 to 24-4782, 24-4784 to 24-4803 inclusive.
H - Used on PA-24-250 with serial numbers 24-2844 and up, PA-24-260 with serial numbers 24-3642, 24-4000 to 24-4782, 24-4784 to 24-4803 inclusive.
J - Less Installation Kit 760 255.
K - Less Installation Kit 754 435.
V - Used on PA-24-260 airplanes only.
X - Used on PA-24-180 airplanes only.
Y - Used on PA-24-250 airplanes only.

Figure and Index Number	Part Number	Code	NOMENCLATURE	No. Req.	SERIAL NUMBERS AFFECTED
			OPTIONAL EQUIPMENT KITS (cont.)		
	752 087	Y	INSTRUMENT - True airspeed		
	752 088	X	INSTRUMENT - True airspeed		
	550 623	Z	INSTRUMENT - True airspeed		
	752 087	V	INSTRUMENT - True airspeed		24-3642, 24-4000 to 24-4246 incl., 24-4248 to 24-4299 inclusive
	550 666	V	INSTRUMENT - True airspeed		24-4247, 24-4300 to 24-4546
	30353-13	V	INSTRUMENT - True airspeed		24-4547 to 24-4782 inclusive, 24-4784 to 24-4803 inclusive
	30353-17	V	INSTRUMENT - True airspeed		24-4783, 24-4804 and up
	756 736	B	FIRE EXTINGUISHER INSTALLATION		
	459 844		FIRE EXTINGUISHER		
	756 810	X	PIPER NAV-TIMER		
	756 826	VYZ	PIPER NAV-TIMER		
	756 784	VZ	PIPER ALL-WEATHER ANTENNA KIT		
	551 215		PIPER GLIDE SLOPE ANTENNA		
	551 229		PIPER GLIDE SLOPE ANTENNA - (Ribbon type)		
	756 904	A	LANDING GEAR WARNING MECHANISM INSTALLATION		
	756 910	VZ	ALTERNATE STATIC SYSTEM INSTALLATION		
	550 759	E	PIPER MIXTURE CONTROL INDICATOR KIT		
	550 853	V	PIPER MIXTURE CONTROL INDICATOR KIT		24-4863, 24-4867 and up
	756 983		REGENCY TRANSPONDER		
	756 828	VZ	CENTRAL AIR FILTER KIT		
	756 830	A	MANUAL ELECTRIC PITCH TRIM		
	760 273	V	MANUAL ELECTRIC PITCH TRIM		24-4783, 24-4804 and up
	756 829	CVZ	PIPER GYROS INSTALLATION - (Less 3" gyros)		24-3642, 24-4000 to 24-4566, 26-2 and up
	756 846	VZ	PIPER OMNI COUPLER KIT - (Used with AltiMatic II or AutoControl II)		
	757 074	D	PIPER OMNI COUPLER KIT - (Used with AltiMatic III or AutoControl III)		
	760 259	V	PIPER OMNI COUPLER KIT		24-4783, 24-4804 and up
	760 245	V	GLIDE SLOPE COUPLER INSTALLATION		24-4783, 24-4804 and up

A - Used on PA-24-260 with serial numbers 24-3642, 24-4000 to 24-4782, 24-4784 to 24-4803 inclusive.
B - Less fire extinguisher, Part No. 459 844.
C - Left cover panel 24410-04 and insert panel 24999-00 must be ordered separately for serial numbers 24-3642, 24-4000 to 24-4246, 24-4248 to 24-4299 inclusive, and 26-2 and up. Left cover panel 25560-03 and insert panel 24999-05 must be ordered separately for serial numbers 24-4247, 24-4300 to 24-4566 inclusive.
D - Used on PA-24-260 with serial numbers 24-4567 to 24-4782 inclusive, 24-4784 to 24-4803 inclusive.
E - Used on PA-24-180 and PA-24-260 with serial numbers 24-1 and up, PA-24-260 with serial numbers 24-3642, 24-4000 to 24-4862 inclusive, 24-4864 to 24-4866 incl. and PA-24-400 with serial numbers 26-2 and up.
V - Used on PA-24-260 airplanes only.
X - Used on PA-24-180 airplanes only.
Y - Used on PA-24-250 airplanes only.
Z - Used on PA-24-400 airplanes only.

Figure and Index Number	Part Number	Code	NOMENCLATURE	No. Req.	SERIAL NUMBERS AFFECTED
			OPTIONAL EQUIPMENT KITS (cont.)		
	756 837	F	PIPER ALTIMATIC II - (3 inch gyros)		
	756 975	V	PIPER ALTIMATIC II - (3 inch gyros)		24-4247, 24-4300 to 24-4566
	757 065	DG	PIPER ALTIMATIC III - (3 inch gyros)		
	760 326	V	PIPER ALTIMATIC III B		24-4783, 24-4804 to 24-5022 incl.
	760 643	V	PIPER ALTIMATIC III B-1		24-5023 and up
	756 849	F	PIPER AUTOCONTROL II - (Course selector) (3 inch gyros)		
	756 977	V	PIPER AUTOCONTROL II - (Course selector) (3 inch gyros)		24-4247, 24-4300 to 24-4566
	757 070	DG	PIPER AUTOCONTROL III - (3 inch gyros)		
	760 263	V	PIPER AUTOCONTROL III		24-4783, 24-4804 and up
	756 943	BF	OXYGEN SYSTEM - (4 Place)		
	756 981	BH	OXYGEN SYSTEM - (4 Place)		
	760 265	BEV	OXYGEN SYSTEM - (4 Place)		24-4783, 24-4804 and up
	757 054	BV	OXYGEN SYSTEM CONVERSION - (4 to 6 Place)		24-4247, 24-4300 and up
	756 966	CH	FAMILY SEAT INSTALLATION - (One seat) (brown)		
	756 967	CH	FAMILY SEAT INSTALLATION - (One seat) (red)		
	756 968	CH	FAMILY SEAT INSTALLATION - (One seat) (blue)		
	756 969	CH	FAMILY SEAT INSTALLATION - (One seat) (gold)		
	756 985	CH	FAMILY SEAT INSTALLATION - (One seat) (black)		
	760 266	AV	FAMILY SEAT INSTALLATION - Red (1 seat)		24-4783, 24-4804 and up
	760 267	AV	FAMILY SEAT INSTALLATION - Blue (1 seat)		24-4783, 24-4804 and up
	760 268	AV	FAMILY SEAT INSTALLATION - White (1 seat)		24-4783, 24-4804 and up
	760 269	AV	FAMILY SEAT INSTALLATION - Black (1 seat)		24-4783, 24-4804 and up
	760 270	AV	FAMILY SEAT INSTALLATION - Gold (1 seat)		24-4783, 24-4804 and up

A - Less seat back 26584-02 (Specify all vinyl or vinyl with cloth insert) or seat back 26584-03 (Specify all leather or leather with cloth insert and seat bottom 26591-02 (Specify all vinyl or vinyl with cloth insert) or seat bottom 26591-03 (Specify all leather or leather with cloth insert).

B - Oxygen masks must be ordered separately. See Oxygen System Installation for part numbers.

C - Less seat back 25535-02 (vinyl), 25535-03 (leather) or 25535-23 (leather with cloth insert) and seat bottom 25534-02 (vinyl), 25534-03 (leather) or 25534-18 (leather with cloth insert).

D - Used on PA-24-260 with serial numbers 24-4567 to 24-4782 inclusive, 24-4784 to 24-4803 inclusive.

E - Less two each of Oxygen Outlet Trim Plates 26524-02 (Beige), 26524-03 (Black) or 26524-04 (White) and one each of 26535-02 (Beige), 26535-03 (Black) or 26535-04 (White).

F - Used on PA-24-260 with serial numbers 24-3642, 24-4000 to 24-4246, 24-4248 to 24-4299 inclusive, and PA-24-400 with serial numbers 26-2 and up.

G - Glar Ban Cover Panel 25560-03 and Gyro Insert Panel 25713-00 are required for serial numbers 24-4567 to 24-4719 inclusive and must be ordered separately.

H - Used on PA-24-260 with serial numbers 24-4247, 24-4300 to 24-4782, 24-4784 to 24-4803 inclusive.

V - Used on PA-24-260 airplanes only.

X - Used on PA-24-180 airplanes only.

Y - Used on PA-24-250 airplanes only.

Figure and Index Number	Part Number	Code	NOMENCLATURE	No. Req.	SERIAL NUMBERS AFFECTED
			OPTIONAL EQUIPMENT KITS (cont.)		
	752 087	Y	INSTRUMENT - True airspeed		
	752 088	X	INSTRUMENT - True airspeed		
	550 623	Z	INSTRUMENT - True airspeed		
	752 087	V	INSTRUMENT - True airspeed		24-3642, 24-4000 to 24-4246 incl., 24-4248 to 24-4299 inclusive
	550 666	V	INSTRUMENT - True airspeed		24-4247, 24-4300 to 24-4546
	30353-13	V	INSTRUMENT - True airspeed		24-4547 to 24-4782 inclusive, 24-4784 to 24-4803 inclusive
	30353-17	V	INSTRUMENT - True airspeed		24-4783, 24-4804 and up
	756 736	B	FIRE EXTINGUISHER INSTALLATION		
	459 844		FIRE EXTINGUISHER		
	756 810	X	PIPER NAV-TIMER		
	756 826	VYZ	PIPER NAV-TIMER		
	756 784	VZ	PIPER ALL-WEATHER ANTENNA KIT		
	551 215		PIPER GLIDE SLOPE ANTENNA		
	551 229		PIPER GLIDE SLOPE ANTENNA - (Ribbon type)		
	756 904	A	LANDING GEAR WARNING MECHANISM INSTALLATION		
	756 910	VZ	ALTERNATE STATIC SYSTEM INSTALLATION		
	550 759	E	PIPER MIXTURE CONTROL INDICATOR KIT		
	550 853	V	PIPER MIXTURE CONTROL INDICATOR KIT		24-4863, 24-4867 and up
	756 983		REGENCY TRANSPONDER		
	756 828	VZ	CENTRAL AIR FILTER KIT		
	756 830	A	MANUAL ELECTRIC PITCH TRIM		
	760 273	V	MANUAL ELECTRIC PITCH TRIM		24-4783, 24-4804 and up
	756 829	CVZ	PIPER GYROS INSTALLATION - (Less 3" gyros)		24-3642, 24-4000 to 24-4566, 26-2 and up
	756 846	VZ	PIPER OMNI COUPLER KIT - (Used with AltiMatic II or AutoControl II)		
	757 074	D	PIPER OMNI COUPLER KIT - (Used with AltiMatic III or AutoControl III)		
	760 259	V	PIPER OMNI COUPLER KIT		24-4783, 24-4804 and up
	760 245	V	GLIDE SLOPE COUPLER INSTALLATION		24-4783, 24-4804 and up

A - Used on PA-24-260 with serial numbers 24-3642, 24-4000 to 24-4782, 24-4784 to 24-4803 inclusive.
B - Less fire extinguisher, Part No. 459 844.
C - Left cover panel 24410-04 and insert panel 24999-00 must be ordered separately for serial numbers 24-3642, 24-4000 to 24-4246, 24-4248 to 24-4299 inclusive, and 26-2 and up. Left cover panel 25560-03 and insert panel 24999-05 must be ordered separately for serial numbers 24-4247, 24-4300 to 24-4566 inclusive.
D - Used on PA-24-260 with serial numbers 24-4567 to 24-4782 inclusive, 24-4784 to 24-4803 inclusive.
E - Used on PA-24-180 and PA-24-260 with serial numbers 24-1 and up, PA-24-260 with serial numbers 24-3642, 24-4000 to 24-4862 inclusive, 24-4864 to 24-4866 incl. and PA-24-400 with serial numbers 26-2 and up.
V - Used on PA-24-260 airplanes only.
X - Used on PA-24-180 airplanes only.
Y - Used on PA-24-250 airplanes only.
Z - Used on PA-24-400 airplanes only.

Figure and Index Number	Part Number	Code	NOMENCLATURE	No. Req.	SERIAL NUMBERS AFFECTED
			OPTIONAL EQUIPMENT KITS (cont.)		
	756 837	F	PIPER ALTIMATIC II - (3 inch gyros)		
	756 975	V	PIPER ALTIMATIC II - (3 inch gyros)		24-4247, 24-4300 to 24-4566
	757 065	DG	PIPER ALTIMATIC III - (3 inch gyros)		
	760 326	V	PIPER ALTIMATIC III B		24-4783, 24-4804 to 24-5022 incl.
	760 643	V	PIPER ALTIMATIC III B-1		24-5023 and up
	756 849	F	PIPER AUTOCONTROL II - (Course selector) (3 inch gyros)		
	756 977	V	PIPER AUTOCONTROL II - (Course selector) (3 inch gyros)		24-4247, 24-4300 to 24-4566
	757 070	DG	PIPER AUTOCONTROL III - (3 inch gyros)		
	760 263	V	PIPER AUTOCONTROL III		24-4783, 24-4804 and up
	756 943	BF	OXYGEN SYSTEM - (4 Place)		
	756 981	BH	OXYGEN SYSTEM - (4 Place)		
	760 265	BEV	OXYGEN SYSTEM - (4 Place)		24-4783, 24-4804 and up
	757 054	BV	OXYGEN SYSTEM CONVERSION - (4 to 6 Place)		24-4247, 24-4300 and up
	756 966	CH	FAMILY SEAT INSTALLATION - (One seat) (brown)		
	756 967	CH	FAMILY SEAT INSTALLATION - (One seat) (red)		
	756 968	CH	FAMILY SEAT INSTALLATION - (One seat) (blue)		
	756 969	CH	FAMILY SEAT INSTALLATION - (One seat) (gold)		
	756 985	CH	FAMILY SEAT INSTALLATION - (One seat) (black)		
	760 266	AV	FAMILY SEAT INSTALLATION - Red (1 seat)		24-4783, 24-4804 and up
	760 267	AV	FAMILY SEAT INSTALLATION - Blue (1 seat)		24-4783, 24-4804 and up
	760 268	AV	FAMILY SEAT INSTALLATION - White (1 seat)		24-4783, 24-4804 and up
	760 269	AV	FAMILY SEAT INSTALLATION - Black (1 seat)		24-4783, 24-4804 and up
	760 270	AV	FAMILY SEAT INSTALLATION - Gold (1 seat)		24-4783, 24-4804 and up

A - Less seat back 26584-02 (Specify all vinyl or vinyl with cloth insert) or seat back 26584-03 (Specify all leather or leather with cloth insert and seat bottom 26591-02 (Specify all vinyl or vinyl with cloth insert) or seat bottom 26591-03 (Specify all leather or leather with cloth insert).

B - Oxygen masks must be ordered separately. See Oxygen System Installation for part numbers.

C - Less seat back 25535-02 (vinyl), 25535-03 (leather) or 25535-23 (leather with cloth insert) and seat bottom 25534-02 (vinyl), 25534-03 (leather) or 25534-18 (leather with cloth insert).

D - Used on PA-24-260 with serial numbers 24-4567 to 24-4782 inclusive, 24-4784 to 24-4803 inclusive.

E - Less two each of Oxygen Outlet Trim Plates 26524-02 (Beige), 26524-03 (Black) or 26524-04 (White) and one each of 26535-02 (Beige), 26535-03 (Black) or 26535-04 (White).

F - Used on PA-24-260 with serial numbers 24-3642, 24-4000 to 24-4246, 24-4248 to 24-4299 inclusive, and PA-24-400 with serial numbers 26-2 and up.

G - Glar Ban Cover Panel 25560-03 and Gyro Insert Panel 25713-00 are required for serial numbers 24-4567 to 24-4719 inclusive and must be ordered separately.

H - Used on PA-24-260 with serial numbers 24-4247, 24-4300 to 24-4782, 24-4784 to 24-4803 inclusive.

V - Used on PA-24-260 airplanes only.

X - Used on PA-24-180 airplanes only.

Y - Used on PA-24-250 airplanes only.

OPTIONAL EQUIPMENT KITS AND REPAIR KITS

Figure and Index Number	Part Number	Code	NOMENCLATURE	No. Req.	SERIAL NUMBERS AFFECTED
			OPTIONAL EQUIPMENT [illegible]		
	24410-00	AZ	GLAR RAN PANEL ASSEMBLY		
	24410-03	AG	GLAR RAN PANEL ASSEMBLY		
	25560-02	AV	GLAR RAN PANEL ASSEMBLY		24-4241, 24-4800 to 24-4719
	24410-04	EF	GLAR RAN PANEL ASSEMBLY		
	25560-03	EH	GLAR RAN PANEL ASSEMBLY		
	24410-05	DG	GLAR RAN PANEL ASSEMBLY		
	25560-04	DV	GLAR RAN PANEL ASSEMBLY		24-4241, 24-4800 to 24-4366
	24411-00	AZ	GLAR RAN PANEL ASSEMBLY		
	25022-02	CG	GLAR RAN PANEL ASSEMBLY		
	25561-02	CH	GLAR RAN PANEL ASSEMBLY		
	25022-03	BG	GLAR RAN PAN [illegible]		
	25561-03	BH	GLAR RAN PAN [illegible]		
	25022-04	BCG	GLAR RAN PANEL ASSEMBLY		
	25561-04	BCH	GLAR RAN PANEL ASSEMBLY		
	760 271		GLAR RAN INSERT KIT		24-4783, 24-4804 and up
	754 285	Y	CARBURETOR [illegible]		24-303 to 24-4476 inclusive
	753 692		PIPER NOISE CANCELLING [illegible]		
	474 647		MICROPHONE - [illegible]		
	474 654		MICROPHONE - [illegible]		
	464 362		HEADSET - [illegible]		
	27004-00		HEADSET AND [illegible]		
	760 350	V	DUAL BRAKE [illegible]		24-4783, 24-4804 and up
	757 112		NITROGEN CYLINDER [illegible]		

A - Used when 3 [illegible]
B - Used when [illegible] installed.
C - Used when fuel [illegible]
D - Used when 3 [illegible] 25229-00 are [illegible] identification of [illegible]
E - Used when 3 [illegible] 550 645, 550 [illegible] or 550 781 are [illegible] identification of [illegible]
F - Used on PA-24-2[illegible] 24-4000 to 24-424[illegible] and PA-24-400 w[illegible]
G - Used on PA-24-2[illegible] 24-4000 to 24-424[illegible]
H - Used on PA-24-2[illegible] 24-4300 to 24-4[illegible]
V - Used on PA-24-2[illegible]
Y - Used on PA-24-25[illegible]
Z - Used on PA-24-40[illegible]

When ordering, always specify [illegible]

Figure and Index Number	Part Number	Code	NOMENCLATURE	No. Req.	SERIAL NUMBERS AFFECTED
			OPTIONAL EQUIPMENT KITS (cont.)		
	760 440	AV	SHOULDER HARNESS INSTALLATION (One Seat)		24-4922 and up
	760 439	BV	INERTIA REEL SHOULDER HARNESS INSTALLATION (One Seat)		24-4922 and up
	760 516	V	HEATED ALTERNATE AIR INDUCTION SYSTEM INSTALLATION		24-3642, 24-4000 to 24-4782 incl., 24-4784 to 24-4803 inclusive
	760 590		PIPER EMERGENCY LOCATOR - Personnel Type		
	53098-00		PIPER AUTOMATIC LOCATOR - Portable Type		
	760 592		PIPER AUTOMATIC LOCATOR INSTALLATION - Fixed Type (Less Emergency Locator Transmitter Kit Part No. 53098-00)		

A - This kit is less the Harness Assembly which must be purchased separately; Front Harness Assembly Part No. 43813-06 Fawn, Part No. 43813-07 Black or Part No. 43813-08 Blue and Center Harness Assembly Part No. 43813-03 Fawn, Part No. 43813-04 Black or Part No. 43813-05 Blue.

B - This kit is less the Harness Assembly which must be purchased separately; Front Harness Assembly 44762-04 Black or Center Harness Assembly 44762-03 Black.

V - Used on PA-24-260 airplanes only.

1

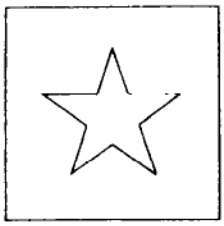

2

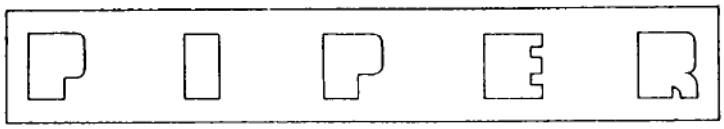

3

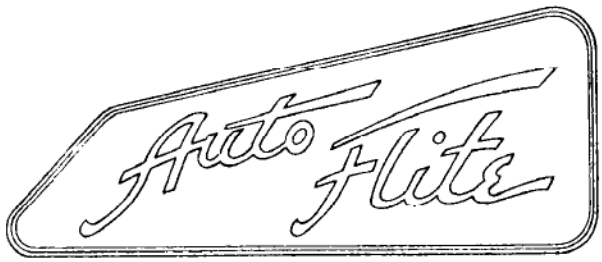

4

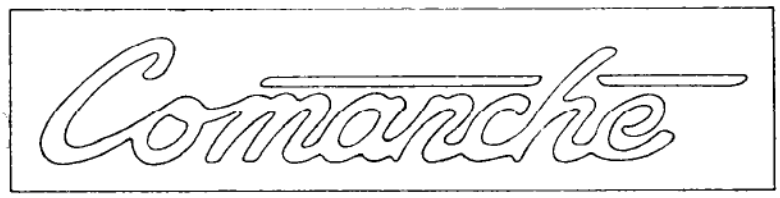

5



6



7

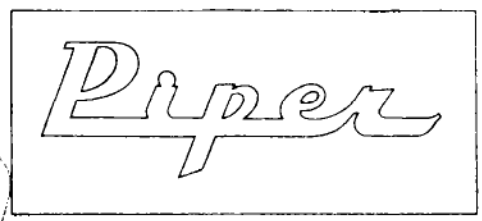

1. 16119-00 STAR - (Chrome) ("250" only) Decal
   16119-02 STAR - (Aluminum) ("250" only) Decal
2. 19390-00 "PIPER" - (Gold) Decal
3. 19605-00 AUTOFLITE - Decal
4. 21107-00 COMANCHE - Decal
5. 21802-00 COMANCHE - (Gold) Decal
   21802-02 COMANCHE - (Chrome) Decal
   21802-03 COMANCHE - (Aluminum) Decal
6. 21803-00 "250" - (Gold) Decal
   21803-02 "250" - (Chrome) Decal
   21803-03 "250" - (Aluminum) Decal
7. 21940-00 PIPER - (Chrome) Decal
   21940-02 PIPER - (Aluminum) Decal
   15030-00 PIPER - (Stencil)
   22859-00 PIPER - (Stencil)

PA-24-180
PA-24-250
PA-24-260
PA-24-400

8 

9 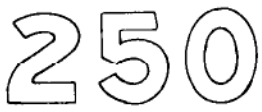

10 

11 

12 

13 

14 

15 

16 

17 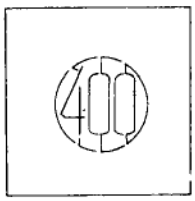

18 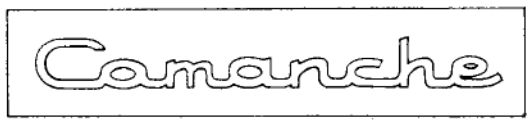

19 

20 

21 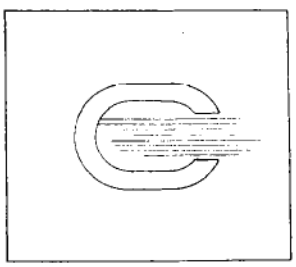

22 

8. 22253-00 COMANCHE - (Aluminum) Medallion
9. 22418-02 NUMERAL "2" - (Aluminum) Medallion
   22418-03 NUMERAL "5" - (Aluminum) Medallion
   22418-04 NUMERAL "0" - (Aluminum) Medallion
10. 22047-00 AUTOFLITE - Medallion
11. 30324-02 NAV. 1 - Placard, radio idnetification
12. 30324-03 NAV. 2 - Placard, radio identification
13. 30324-05 TRANS. 1 - Placard, radio identification
14. 30324-04 TRANS. 2 - Placard, radio identification
15. 30324-06 COMM. - Placard, radio identification
16. 24501-02 "400" - (Stencil)
17. 24501-03 "400" - (Stencil)
18. 24156-00 COMANCHE - (Stencil)
19. 24711-00 "260" - (Stencil)
20. 25625-00 "B" - (Stencil)
21. 27000-00 "C" - (Stencil)
22. 27122-00 Turbocharged (Decal)

NUMERICAL INDEX

Part Number	Fig. and Index
SK928-2	25-31
SK928-3	25-9
SK928-4	25-33
SK928-5	25-32
SK928-6	25-13
SK928-7	25-9
SK928-8	25-33
SK928-9	25-32
SK928-10	25-13
SK928-11	25-9
SK928-12	25-32
SK928-13	25-33
SK928-14	25-13
10151-00	27A-17
10438-02	33-17
10525-14	13C-7
10525-19	13A-42
10525-19	13B-72
10525-37	13B-3
10525-51	24A-34
10525-51	26-12
10525-51	26A-15
10525-58	13B-8
10525-59	13-3
10525-59	13-7
10525-60	13-6
10525-60	24A-44
10525-61	13C-67
10525-61	27C-8
10525-64	13C-69
10525-65	13-23
10525-66	13C-5
10525-67	13-15
10525-68	13-7
10525-69	13-6
10525-69	13A-41
10525-72	13A-40
10525-73	13C-6
10525-74	24A-34
10525-74	30-33
10525-74	30B-71
10525-76	13B-3
10525-76	13B-9
10525-76	13C-69
10525-82	13A-36
10525-83	13A-37
10525-83	13C-39
10525-84	13A-16
10525-84	13B-9a
10525-86	13A-54
10525-86	13B-8
10525-91	27-9
10525-91	27A-24
10525-93	13A-60
10525-93	13B-71
10525-100	13C-8
11199-03	7-52
11199-06	7A-2
11199-06	11-83
11199-07	7-44
11199-07	7A-2
11203-02	7-45
11203-02	7A-3
11203-02	7A-75
11383-04	30-1
11383-04	30A-1
11601-03	16A-32
11789-00	29-13
12073-00	12-24
12073-00	12A-17
12073-00	12A-33
12073-00	12B-6
12156-02	33-3
12605-00	20-46
12707-00	25B-17
12707-04	25-14
12723-00	25-34
12723-00	25B-10
12723-00	25B-13
12799-19	11-8
12799-21	11-8
12799-23	11-8
12799-25	11-8
12799-27	11-8
12799-35	11-8
12799-39	11-8
12799-40	11-8
12799-41	11-8
12799-42	11-8
12799-49	11-8
12799-50	11-8
12956-04	24-23
13001-02	31B-43
13002-00	30C-22
13002-00	32A-41
13098-00	16A-40
13134-00	35-3
13135-00	35-4
13135-02	35-4
13145-69	46-1
13215-00	20-5
13215-00	20A-13
13357-00	13-21
13357-00	13A-17
13425-00	15-11
13445-00	34-15
13445-04	34-16
13445-07	34-15
13541-04	24E-10
13586-14	20A-14
13586-32	20A-14
13586-22	13A-1
13586-35	15-20
13586-46	32B-4
13586-47	32B-1
13586-48	32B-19
13586-52	32B-24
13586-53	32B-2
13586-54	24A-33
13586-54	24B-39
13586-54	24C-60
13586-54	32B-5
13586-69	13A-2
13586-69	13B-51
13586-70	13A-3
13586-70	13B-53
13586-70	13C-1
13586-71	13A-4
13586-71	13B-50
13586-72	13A-5
13586-72	13B-48
13586-73	13A-6
13586-73	13B-47
13586-74	13A-7
13586-74	13B-46
13586-75	13A-8
13586-75	13B-42
13586-76	13A-9
13586-76	13B-44
13586-76	13C-2
13586-85	13B-54
13586-85	20A-14
13621-04	7A-4
13621-04	7B-15
13621-06	7A-4
13621-07	7A-4
13947-14	12-2
13947-14	12A-1
13947-29	12-1
13947-29	12A-2a
13947-33	8A-41
13947-33	12-2
13947-39	8A-40
13947-39	12-1
13947-46	8A-41
13947-46	12-2
13947-46	12A-1
13947-52	8A-41
13947-55	8A-40
13947-55	12-1
13947-55	12A-2a
13947-57	8A-40
13947-59	8A-40
13947-59	12-1
13947-62	8A-41
13947-62	12-2
13947-65	8A-40
13947-65	12-1
13947-65	12A-2a
13947-68	8A-41
13947-68	12-2
13947-68	12A-1
13947-75	12A-1
13947-76	12A-2a
13947-87	12A-2
13947-88	12A-2
13947-89	12A-2
13947-90	12A-2
13950-00	8-10
13950-00	8-35
13950-02	8-10
13950-02	8-35
14069-00	32B-16
14069-00	32C-17
14072-00	32B-23
14086-02	32B-17
14149-00	13-13
14149-00	13A-56
14171-00	10-22
14175-45	9-11
14175-35	32A-29
14175-43	12-23

Part Number	Fig. and Index
14175-43	12B-5
14175-50	16-24
14175-65	10-24
14175-101	18A-21
14175-103	32A-29
14183-03	38-30
14183-06	46-66
14183-06	46A-50
14184-00	24A-22
14184-00	24B-9
14184-00	24C-15
14226-16	32-6
14226-17	32B-18
14226-19	32B-18
14226-19	32C-4
14226-25	32-6
14226-26	32-6
14226-30	32-6
14226-37	32C-6
14226-40	32C-4
14226-41	32C-9
14226-46	32C-6
14235-00	27-7
14235-00	27D-4
14235-08	27-7
14235-08	27A-12
14235-12	27B-20
14260-19	8-21
14260-21	8-21
14260-23	8-21
14260-25	8-21
14260-27	8-21
14260-37	8-21
14260-47	8-21
14260-48	8-21
14260-49	8-21
14260-50	8-21
14260-55	8-21
14260-56	8-21
14300-06	36-43
14300-09	36-43
14300-30	38-22
14300-30	46-60
14300-30	46A-35
14311-39	32-4
14311-44	32-4
14314-02	32-16
14330-04	30-2
14428-00	30-7
14476-05	8-43
14493-00	15-19
14513-00	26-1
14513-02	26A-1
14513-02	26B-1
14563-05	49-18
14563-05	50-9
14564-03	49-4
14564-03	50-5

Part Number	Fig. and Index
14565-06	50-10
14566-05	49-19
14627-03	11-17
14634-00	11-14
14634-00	11-37
14635-00	11-38
14635-02	11-16
14635-02	11-77
14843-07	11A-23
14843-08	36-54
14843-10	10-13
14843-10	10A-32
14843-13	36-53
14843-16	16-36
14843-18	16A-19
14843-18	16A-21
14843-18	16A-23
14843-18	16A-25
14843-19	16A-18
14843-20	16-12
14843-20	16-23
14843-26	38-18
14843-27	19-16
14843-29	16-48
14843-30	16-46
14843-32	12-10
14843-33	38-27
14843-34	38-28
14843-35	36-12
14843-36	36-13
14843-37	36-14
14843-38	36-18
14843-39	36-19
14843-46	20-13
14843-47	38-15
14843-48	35-15
14843-49	20-8
14843-50	20-11
14843-51	12-3
14843-51	12A-3
14843-60	16-44
14843-62	17-35
14843-67	25-3
14843-69	16-38
14843-70	11-28
14843-70	24D-44
14843-73	29-27
14843-78	10-29
14843-78	10-30
14843-78	10A-37
14843-79	16-37
14843-79	17-16
14843-88	17-9b
14843-88	17-14
14843-89	10-28
14843-90	11-18
14843-93	16-12
14843-93	16-23

Part Number	Fig. and Index
14843-97	37-18
14843-98	37-2
14843-99	10-31
14843-113	7B-41
14976-02	34-10
14976-03	34-10
14976-06	34-33
14976-07	36-66
14976-08	36-67
14976-09	18-11
14976-09	18A-28
14976-09	36-66
14976-10	13-32
14976-10	13A-18
14976-11	19-59
14976-11	19A-51
14976-12	16A-14
14976-13	16A-15
14976-15	16A-6
14976-16	16A-7
14976-17	16A-2
14976-21	16A-15
14976-23	16A-15
14976-32	16A-44
14976-42	38-17
14976-63	38-17
14976-64	20A-15
14976-65	20A-16
14976-68	11-62
14976-72	3B-42
14976-72	39-40
14976-73	3B-43
14976-73	39-41
14976-74	39-54
14976-74	40-43
14976-80	39-25
14976-80	40-23
14976-81	39-26
14976-81	40-24
14976-82	39-42
14976-83	39-39
14976-104	46-14
15044-00	20-10
15065-03	49-17
16090-00	31B-57
16090-01	31B-57
16109-00	23C-10
16110-02	23C-2
16110-03	23C-9
16211-00	30-4
16268-06	30A-45
16268-06	30B-45
16268-06	31A-45
16268-06	31C-30
16268-08	30B-65
16268-08	31A-45
16268-08	31C-31
16439-00	33A-26

Part Number	Fig. and Index
16439-00	46-9
16439-00	46A-51
16439-00	54-5
16443-00	24-26
16443-00	24A-23
16444-00	24-27
16444-00	24A-25
16457-00	24-31
16457-00	24A-41
16510-02	12-30
16510-03	12-30
16510-04	12-30
16510-05	12-30
16510-27	12-30
16510-28	12-30
16510-29	12-30
16510-30	12-30
16514-00	11-72
16514-00	20A-27
16553-02	24-32
16553-02	24A-42
16559-00	24-33
16559-00	24A-43
16564-02	24A-26
16564-05	24-28
16604-00	29A-66
16632-00	24C-33
16632-00	24D-67
16632-00	31A-46
16633-04	14A-29
16633-08	30A-28
16633-08	30-31
16633-08	30B-32
16633-14	14A-7
16633-21	24-24
16633-22	30C-1
16633-25	14A-20
16633-26	14A-29
16633-29	14A-7
16633-30	14A-7
16633-36	24D-1
16633-37	13B-54a
16633-37	13C-4
16633-37	24C-59
16633-38	31A-47
16633-39	24D-68
16633-46	31A-22
16633-50	24C-25
16633-50	31C-17
16633-50	31D-82
16633-51	24C-26
16633-52	24C-27
16633-53	24C-37
16633-56	24D-1
16633-56	24E-1
16633-57	24A-19
16633-65	46-61
16633-65	46A-38

PILOTEN-SERVICE
Straubing LBA II-A-170
Telefon (09421) 714

Part Number	Fig. and Index
16633-66	46-62
16633-67	15B-65
16633-67	15C-63
16633-71	31D-15
16633-75	24G-112
16633-94	14A-22
16722-02	38-16
16722-03	38-16
16771-00	36-77
16775-00	20-16
16775-00	29-3
16800-02	23C-34
16800-03	23C-34
16800-07	23C-18
16800-08	23C-17
16800-09	23C-19
16800-10	23C-20
16800-11	23C-21
16800-12	23C-22
16800-14	23C-32
16800-15	23C-30
16800-16	23C-31
16800-17	23C-23
16800-18	23C-24
16800-19	23C-25
16800-28	23C-4
16800-29	23C-29
16800-32	23C-33
16800-33	23C-33
16800-36	23C-3
16800-37	23C-32
16800-38	23C-3
16800-44	23A-1
16800-44	23C-1
16800-45	23A-1
16800-45	23C-1
16800-48	23C-5
16800-49	23C-5
16800-50	23C-6
16800-51	23C-6
16800-52	23C-12
16800-53	23C-27
16800-54	23C-28
16800-55	23C-13
16800-56	23C-14
16802-00	23C-26
16803-00	23C-37
16809-02	23C-15
16809-03	23C-16
16914-00	23A-14
16914-00	23C-8
16999-00	23C-7
17089-00	38-13
17164-00	24-1b
17164-04	24A-1b
17164-04	24B-3
17164-04	24C-4
17203-02	35-18
17203-03	35-18
17217-00	5B-9
17315-00	4-24
17315-00	5A-16a
17316-00	2-1
17316-00	4-16
17316-00	5A-33
17365-02	4-3
17419-03	7-16
17419-06	7-16
17419-06	7A-5
17419-07	7-16
17419-07	7A-5
17419-12	7A-5
17419-16	7A-5
17419-18	7A-5
17419-23	7B-13
17442-03	38-24
17528-33	30C-2
17555-00	32B-14
17555-00	32C-16
17566-02	32B-12
17566-02	32C-2
17604-04	32-18
17604-14	32C-25
17604-15	32-18
17604-16	32-18
17667-00	6-28
17735-00	32B-25
17766-03	20-27
17766-03	20A-5
17766-06	30D-4
17766-07	15-7
17766-07	30-9
17766-08	20-27
17766-17	30-10
17766-18	30-11
17766-18	30A-14
17766-19	30B-15
17766-20	30-10
17766-20	30-11
17766-20	30B-15
17766-20	30B-16
17766-21	15-7
17766-21	30-9
17766-21	30-13
17766-21	31D-24
17766-33	16-56
17766-33	20-4
17766-33	20A-67
17766-35	30A-13
17766-37	30-9
17766-38	15-7
17766-39	15-11
17766-40	30A-12
17766-41	15-7
17766-41	24D-2
17766-41	24E-2
17766-41	31A-1
17766-42	15-11
17766-43	30B-14
17766-43	31C-14
17766-44	20A-4
17766-46	15-7
17766-47	28A-5
17766-47	28B-4
17766-48	28A-6
17766-49	28A-6
17766-61	24D-10
17766-61	24E-31
17766-61	31A-4
17766-61	31D-18
17766-63	24D-3
17766-63	24E-3
17766-63	31A-3
17766-63	31D-19
17766-64	24D-11
17766-64	24E-30
17766-64	31A-5
17766-64	31D-17
17766-68	24D-4
17766-68	24E-4
17766-69	24D-5
17766-69	31A-2
17766-71	16-56
17766-71	20-4
17766-71	20A-67
17766-77	20B-1
17766-78	20B-2
17766-79	20B-3
17766-80	20B-4
17766-81	15-11
17766-82	28B-2
17766-83	28B-3
17766-87	31C-16
17766-89	31A-5
17766-104	31A-78
17775-00	24-22
17775-02	24A-27
17783-00	49-2
17783-00	50-3
17789-00	29B-12
17803-00	15-9
17803-00	30-12
17807-00	32-11
17807-00	32A-25
17807-00	39-2
17807-00	40-17
17847-00	9-8a
17847-00	9-9a
17852-02	29A-9
17852-03	24G-8
17852-03	29A-10
17870-06	9-9
17870-08	9-9
17871-06	9-8
17871-08	9-8
17871-10	9-8
17881-03	14A-25
17881-04	7B-52
17881-04	7B-74
17884-00	24-26
17884-00	24A-23
17884-02	24-26
17884-02	24A-23
17899-03	7-43
17899-03	7A-6
17952-00	6-34
17953-05	49-3
17953-05	50-4
17962-03	7A-7
17962-03	33-10
17962-04	7-47
17965-04	8-37
17965-05	8-37
18072-00	5B-9
18081-00	16-20
18132-00	29-19
18132-00	29B-13
18132-02	29-19
18132-02	29A-40
18219-00	29-20
18219-00	29B-10
18219-02	24E-50
18219-02	29-20
18219-02	29-40
18219-02	29B-11
18219-02	29A-41
18290-05	20-20
18291-02	14-3
18316-02	2-3
18316-02	36-44
18316-03	36-46
18318-00	12-16
18318-00	12A-9
18320-02	32-2
18320-07	32-1
18320-08	32-1
18321-00	32-3
18359-00	10-4
18359-00	10A-3
18405-00	6-30
18405-00	13A-43
18405-00	13B-52
18457-00	4-7
18467-00	8-11
18467-00	8-36
18492-02	33-12
18514-00	5-30
18522-08	50-20
18622-00	28-10
18842-00	12-15
18842-00	12A-10
18842-02	12-15

Part Number	Fig. and Index
18872-10	25-10
18875-05	13-25
18875-05	13A-35
18875-06	8-9
18875-06	8-34
18875-06	33-16
18875-07	29-12
18875-08	29-2
18936-00	14-21
18968-00	12-22
18968-00	12A-15
18968-00	12A-31
18968-00	12B-4
18994-00	8-42
18994-06	8B-49
19011-00	20-47
19031-00	50-25
19047-04	31B-60
19051-00	31B-61
19053-00	15-9
19063-02	11-55
19063-02	11A-41
19079-00	50-52
19099-00	7A-8
19109-00	49-1
19109-00	50-1
19156-10	31B-56
19156-11	31B-56
19161-00	8C-5
19166-12	8C-1
19166-13	8C-2
19166-14	8C-6
19166-15	8C-7
19166-16	8C-3
19166-17	8C-4
19166-20	8C-1
19166-22	8C-2
19233-02	32-8
19274-00	31B-55
19274-01	31B-55
19286-00	49-15
19286-00	50-13
19304-00	12-27h
19336-00	12-27c
19336-00	12A-24
19336-00	12A-40
19336-00	12B-11
19336-01	12-27c
19336-01	12A-24
19336-01	12B-11
19336-01	12A-40
19341-02	12-30
19341-06	12-30
19341-10	12-30
19341-17	12-30
19359-00	12-27g
19365-00	12-27f
19365-00	12A-22

Part Number	Fig. and Index
19365-00	12A-38
19365-00	12B-9
19377-00	13A-10
19377-00	13B-41
19378-00	13A-11
19378-02	13B-40
19380-05	13A-12
19380-05	13B-38
19380-06	13A-12
19380-06	13B-38
19392-12	12-27a
19392-13	12-27a
19402-00	12-35
19455-00	12-27b
19477-08	6-31
19477-08	13A-63
19513-03	7A-9
19513-10	16-12
19513-14	34-34
19513-16	34-35
19513-24	13B-65
19513-31	13B-11
19513-37	39-38
19513-39	19A-28
19513-47	24D-12
19513-47	24E-27
19513-47	31A-50
19513-47	31D-70
19513-50	30B-64
19513-50	31C-34
19513-50	31D-41
19513-51	30B-64
19513-51	31C-33
19513-51	31D-40
19513-56	16-48
19513-70	13C-19
19513-75	13C-14
19513-89	8-69
19513-89	8B-3
19513-93	24B-41
19513-93	36-8
19513-94	2-85
19530-00	5G-20
19540-05	7A-10
19543-00	7A-11
19561-00	41-23
19562-00	41-22
19563-00	41-21
19790-16	32C-10
19790-18	32C-11
19795-00	2-79
19795-00	23-13
19795-00	23-17
19795-00	23A-10
19795-00	23A-16
19802-05	15A-1
19802-05	15B-1
19802-05	15C-1

Part Number	Fig. and Index
19807-00	32-63
19871-00	13C-87
19885-00	44-28
19885-00	45-4
19897-00	14A-23
19897-00	44-25
19927-02	8-37
19927-02	8A-21
19927-03	8-37
19927-03	8A-21
19927-04	8A-21
19927-05	8-37
19927-06	8-37
19927-07	8-37
19927-08	8B-5
19927-09	8B-5
19927-10	8B-5
19940-00	7A-6
19941-00	11-70
19943-02	8A-6
19943-07	8A-6
19943-08	8A-6
19943-17	8A-6
19943-22	8A-6
19943-27	12-30
19943-28	12-30
19943-29	12-30
19987-00	24D-60
19987-00	29-22
19987-00	29B-14
19991-00	41-21
19993-00	41-23
20183-00	23D-13
20183-03	23E-23
20183-03	23D-13
20183-05	23E-23
20184-00	23D-14
20185-00	23D-15
20185-00	23E-9
20193-07	23B-16
20193-08	23B-17
20193-09	23B-18
20193-10	23B-19
20193-11	23B-20
20193-12	23B-21
20193-14	23B-30
20193-15	23B-29
20193-16	23B-28
20193-17	23B-27
20193-18	23B-26
20193-19	23B-25
20193-20	23B-11
20193-21	23B-12
20193-22	23B-9
20193-23	23B-9
20193-24	23B-24
20193-24	23C-11
20193-25	23B-5

Part Number	Fig. and Index
20193-25	23C-35
20193-26	23B-10
20193-27	23B-10
20193-28	23B-6
20193-29	23B-22
20193-32	23B-15
20193-33	23B-15
20193-35	23-1
20193-35	23B-1
20193-36	23-1
20193-36	23B-1
20193-41	23B-23
20194-00	23-4
20194-01	23-4
20194-18	23-5
20195-00	23-6
20197-00	23B-13
20198-00	23B-14
20203-00	23-25
20203-02	23-26
20203-03	23-25
20204-00	23-27
20204-00	23A-36
20205-00	23-27
20205-00	23A-36
20207-00	23-19
20207-04	23A-32
20207-06	23-19
20208-04	23A-32
20208-00	23-21
20211-00	2-6
20211-00	2A-26
20213-00	2A-25
20234-00	2-5
20234-00	2A-21
20234-01	2-5
20234-01	2A-21
20234-02	2A-33
20234-03	2A-33
20234-04	2A-32
20234-05	2A-32
20234-06	2A-35
20234-07	2A-35
20234-08	2A-37
20234-09	2A-37
20234-10	2A-36
20234-11	2A-36
20234-14	2A-27
20234-15	2A-28
20234-16	2A-24
20234-17	2A-22
20234-18	2A-34
20234-19	2A-31
20234-24	2A-31
20234-27	2-5
20234-27	2A-21
20234-28	2-5
20234-28	2A-21

Part Number	Fig. and Index
20234-29	2-5
20234-29	2A-21
20234-30	2A-23
20234-31	2A-23
20240-00	3-51
20240-00	3A-53
20240-01	3-15
20240-01	3A-53
20242-00	3B-31
20242-01	3B-31
20244-00	31-18
20244-02	30C-32
20249-00	4-12
20249-01	4-12
20252-00	3-4
20252-00	3A-5
20252-01	3-4
20252-01	3A-5
20252-05	3A-5
20252-06	3A-5
20254-00	3-7
20254-00	3A-6
20254-01	3-7
20254-01	3A-6
20256-00	36-58
20256-01	36-58
20257-02	23B-3
20257-03	23B-4
20260-00	2A-5
20262-00	3-29
20262-00	3A-44
20262-00	3B-35
20262-01	3-29
20262-01	3A-44
20262-01	3B-35
20263-02	3-16
20263-03	3-16
20263-04	3-35
20263-04	3A-34
20263-04	3B-15
20263-05	3-35
20263-05	3A-34
20263-05	3B-15
20264-00	15-1
20266-00	3-23
20266-00	3A-11
20266-01	3-23
20266-01	3A-11
20266-02	3B-3
20266-03	3B-3
20267-00	3A-86
20267-02	3A-86
20268-00	3-13
20268-01	3-13
20269-00	3-34
20269-00	3A-36
20269-00	3B-16
20269-01	3-34

Part Number	Fig. and Index
20269-01	3A-36
20269-01	3B-16
20270-00	3-17
20270-00	3A-35
20270-01	3-17
20270-01	3A-35
20272-06	2-7
20272-07	2-7
20272-10	3-21
20272-10	3A-48
20272-11	3-21
20272-11	3A-48
20273-02	3-68
20273-02	3A-64
20273-03	3-68
20273-03	3A-64
20273-04	3-67
20273-05	3-67
20273-06	3-66
20273-06	3A-66
20273-07	3-66
20273-07	3A-66
20273-10	3-64
20273-10	3A-67
20273-11	3-64
20273-11	3A-67
20273-12	3-63
20273-12	3A-68
20273-13	3-63
20273-13	3A-68
20273-14	3-65
20273-15	3-65
20273-16	3A-65
20273-16	3A-70
20273-17	3A-65
20273-17	3A-70
20273-18	3A-71
20273-19	3A-71
20273-20	3A-69
20273-21	3A-69
20274-06	3-24
20274-06	3A-49
20274-06	3B-20
20274-07	3-24
20274-07	3A-49
20274-07	3B-20
20274-08	2-8
20274-09	2-8
20275-04	3-25
20275-04	3A-46
20275-04	3B-19
20275-05	3-25
20275-05	3A-46
20275-05	3B-19
20275-06	3-20
20275-06	3A-45
20275-07	3-20
20275-07	3A-45

Part Number	Fig. and Index
20277-00	2-10
20277-00	2A-13
20278-00	2-11
20278-00	2A-14
20278-02	2-11
20278-02	2A-14
20279-00	2A-19
20282-00	3-18
20282-00	3A-39
20282-03	3-18
20282-03	3A-39
20283-00	3-27
20283-00	3A-40
20283-00	3B-39
20283-01	3-27
20283-01	3A-40
20283-01	3B-39
20284-00	3B-36
20284-01	3B-36
20286-02	3-58
20286-02	3A-76
20286-03	3-58
20286-03	3A-76
20286-04	3-58
20286-04	3A-77
20286-05	3-58
20286-05	3A-77
20287-00	3-57
20287-00	3A-78
20287-01	3-57
20287-01	3A-78
20288-00	3-28
20288-00	3-30
20288-00	3A-41
20288-00	3A-47
20288-00	3B-34
20288-01	3-28
20288-01	3-30
20288-01	3A-41
20288-01	3A-47
20288-01	3B-34
20289-00	3-53
20289-00	3-54
20289-00	3A-58
20289-00	3A-59
20289-01	3-53
20289-01	3-54
20289-01	3A-58
20289-01	3A-59
20290-00	36-57
20293-00	3-46
20293-00	3A-60
20293-00	3B-32
20294-00	3-44
20294-00	3A-62
20294-00	3B-37
20296-00	3-2
20296-01	3-2

Part Number	Fig. and Index
20296-03	3A-2
20296-04	3A-2
20296-05	3A-2
20296-06	3A-2
20296-07	3A-2
20296-08	3A-2
20296-09	3A-2
20296-10	3A-2
20300-00	3-50
20300-00	3A-57
20302-00	3-48
20302-00	3A-55
20303-08	3-9
20303-08	3A-19
20303-09	3-9
20303-09	3A-19
20303-14	3-10
20303-14	3A-20
20303-15	3-10
20303-15	3A-20
20303-16	3-9
20303-16	3A-19
20303-17	3-9
20303-17	3A-19
20303-18	3-9
20303-18	3A-19
20303-19	3-9
20303-19	3A-19
20303-22	3A-19
20303-23	3A-19
20304-00	2-9
20304-00	2A-1
20304-00	5E-50
20304-01	2-9
20304-01	2A-1
20304-02	2A-8
20304-04	2A-7
20304-06	2A-9
20304-08	2A-10
20304-10	2A-11
20304-12	2A-3
20304-12	2A-4
20304-13	2A-3
20304-13	2A-4
20304-14	2A-2
20304-15	2A-2
20304-18	2A-17
20304-19	2A-17
20304-20	2A-12
20304-26	2A-18
20304-30	2B-20
20304-36	2A-6
20304-37	2A-15
20304-38	2A-15
20304-39	2A-16
20304-40	2A-16
20304-41	2A-15
20304-42	2-9

Part Number	Fig. and Index
20304-42	2A-1
20304-43	2-9
20304-43	2A-1
20306-00	31-8
20306-02	31-8
20307-06	3-11
20307-06	3A-23
20307-07	3-11
20307-07	3A-23
20307-08	3-11
20307-08	3A-23
20307-09	3-11
20307-09	3A-23
20307-10	3-11
20307-10	3A-23
20307-11	3-11
20307-11	3A-23
20307-14	3A-23
20307-15	3A-23
20308-00	3-37
20308-00	3A-28
20308-01	3-37
20308-01	3A-28
20309-00	3-55
20309-00	3A-52
20309-00	3B-40
20309-01	3-55
20309-01	3A-52
20309-01	3B-40
20310-02	3-19
20310-02	3A-42
20310-03	3-19
20310-03	3A-42
20310-04	3-26
20310-04	3A-43
20310-04	3B-18
20310-05	3-26
20310-05	3A-43
20310-05	3B-18
20311-00	2-12
20313-00	2-13
20314-00	2-14
20315-00	2-15
20315-02	2-16
20318-00	3-33
20318-00	3A-37
20318-00	3B-17
20318-01	3-33
20318-01	3A-37
20318-01	3B-17
20319-00	3-41
20319-00	3A-15
20319-01	3-41
20319-01	3A-15
20320-00	3-39
20320-00	3A-21
20320-00	3B-6
20320-01	3-39

Part Number	Fig. and Index
20320-01	3A-21
20320-01	3B-6
20321-00	3-40
20321-00	3A-17
20321-01	3-40
20321-01	3A-17
20323-02	3-12
20323-02	3A-26
20323-03	3A-26
20323-08	3-14
20323-09	3-14
20324-00	3-61
20324-00	3A-9
20324-00	3B-14
20324-01	3-61
20324-01	3A-9
20324-01	3B-14
20324-02	3B-14
20324-03	3B-14
20325-00	31B-2
20326-00	31B-3
20327-00	31-5
20327-03	30C-9a
20327-03	31-7a
20327-03	31B-8
20328-00	31-4
20328-02	30C-4
20328-02	31-4
20328-02	31B-4
20329-00	31-2
20329-04	31-2
20329-06	30C-3
20329-08	31-2
20329-09	31B-1
20330-00	30C-43
20330-00	31-27
20330-00	31B-24
20330-02	30C-43
20330-02	31-27
20330-02	31B-24
20332-00	30C-42
20332-00	31-26
20332-00	31B-25
20333-00	31-9
20333-00	31B-12
20335-00	3-6
20335-00	3A-13
20335-01	3-6
20335-01	3A-13
20336-00	3-5
20336-00	3A-14
20336-01	3-5
20336-01	3A-14
20337-02	3-31
20337-02	3A-38
20337-03	3-31
20337-03	3A-28
20337-04	3-32

Part Number	Fig. and Index
20337-04	3A-18
20337-05	3-32
20337-05	3A-18
20337-06	3-43
20337-06	3A-22
20337-07	3-43
20337-07	3A-22
20337-08	3-42
20337-08	3A-25
20337-09	3-42
20337-09	3A-25
20345-00	2-78
20345-02	2-78
20346-00	3-59
20346-00	3A-50
20347-02	2-17
20348-00	2-18
20348-01	2-18
20351-00	3-38
20351-00	3A-24
20351-00	3B-7
20351-01	3-38
20351-01	3B-7
20351-08	3B-7
20351-09	3B-7
20353-00	3-15
20353-01	3-15
20354-00	3-36
20354-00	3A-31
20354-01	3-36
20354-01	3A-31
20355-00	31-15
20355-01	31-15
20357-06	3-8
20357-06	3A-16
20357-07	3-8
20357-07	3A-16
20357-08	3-8
20357-08	3A-16
20357-09	3-8
20357-09	3A-16
20357-10	3-8
20357-10	3A-16
20357-11	3-8
20357-11	3A-16
20358-00	2-81
20358-01	2-81
20359-00	2-82
20360-04	4-15
20360-05	4-15
20360-08	4-11
20360-09	4-11
20360-14	3-69
20360-14	3A-84
20360-15	3-69
20360-15	3A-84
20360-26	4-1
20360-27	4-1

Part Number	Fig. and Index
20360-28	4-2
20360-29	4-2
20360-34	3-60
20360-34	3A-8
20360-35	3-60
20360-35	3A-8
20364-00	3-62
20364-00	3A-10
20364-01	3-62
20364-01	3A-10
20366-00	4-27
20366-00	30C-6
20366-00	31-10
20366-00	31B-5
20366-00	31B-30
20366-02	30C-20
20366-02	31-11
20366-02	31B-15
20366-02	31B-34
20366-02	31B-41
20370-00	2-19
20370-00	4-17
20372-00	4-25
20377-00	3-1
20377-01	3-1
20377-18	4-13
20377-19	4-13
20377-20	4-14
20377-21	4-14
20377-26	4-4
20377-27	4-4
20377-28	4-9
20377-29	4-9
20377-30	4-10
20377-31	4-10
20377-45	4-6
20377-46	4-6
20377-47	4-5
20377-48	4-5
20377-49	4-4
20377-50	4-4
20379-00	23F-6
20379-00	23G-4
20379-01	23F-6
20379-01	23G-4
20389-00	39-23
20389-00	50-2
20393-00	16-6
20394-00	16-6
20395-00	23F-9
20396-00	3-3a
20396-00	3A-4
20397-00	23-30
20397-00	23A-39
20398-00	23-29
20398-02	23-29
20399-00	23-28
20399-02	23-28

Part Number	Fig. and Index
20400-00	6-33
20404-00	23-12
20407-00	6-12
20411-00	5E-58
20411-00	5F-68
20411-01	5E-58
20411-01	5F-68
20419-00	6-19a
20419-01	6-19a
20420-00	6-20
20420-01	6-20
20428-00	6-39
20428-01	6-39
20432-00	6-18
20433-00	2-21
20434-00	5G-38
20435-00	5G-39
20437-04	36-11
20437-05	36-20
20437-06	36-21
20438-02	36-10
20438-03	36-17
20440-02	12-14
20440-03	12-13
20440-04	12-12
20440-05	12-11
20442-02	5E-9
20442-02	5F-10
20442-03	5E-10
20442-03	5F-11
20443-00	5D-36
20443-01	5D-36
20444-00	36-15
20445-00	5E-59
20445-00	5F-47
20446-00	9-4
20447-04	2-22
20447-05	2-22
20447-07	2-22
20447-08	2-22
20449-00	9-6
20449-01	9-5
20450-00	6-13
20450-13	6-13
20452-00	6-15
20454-00	9-3
20455-00	5E-2
20455-00	5F-2
20455-01	5E-2
20455-01	5F-2
20457-00	5B-7
20457-00	5C-7
20458-02	9-1
20458-03	9-2
20460-00	6-14
20462-00	34-1a
20462-02	34-1a
20462-03	34-1a
20462-04	34-1a
20463-00	9-12
20464-00	5E-3
20464-01	5E-3
20467-00	9-3
20468-00	32A-18
20469-00	32A-17
20470-00	5E-66
20472-00	5E-66
20473-00	6-24
20473-01	6-24
20475-00	6-16
20475-05	6-16
20476-00	2-31
20476-01	2-31
20477-00	5E-4
20477-00	5F-4
20479-00	6-17
20479-12	6-17
20479-15	6-17
20480-00	9-14
20482-00	7-8
20482-01	7-8
20485-02	38-12
20488-02	35-7
20488-03	35-7
20489-00	2-2
20489-01	2-2
20493-00	5D-30
20493-01	5D-30
20496-00	5E-42
20497-00	5E-11
20497-00	5F-12
20498-00	5E-12
20498-00	5F-13
20500-00	5-2
20500-00	6-1
20500-05	6-6
20500-06	6-10
20500-07	6-11
20500-11	6-5
20500-15	6-27a
20500-16	6-36
20500-26	6-22
20500-27	6-22
20500-28	6-21
20500-29	6-21
20500-30	6-23
20500-31	6-22a
20500-34	6-9
20500-35	6-8
20500-36	6-7
20500-37	6-2
20500-38	6-3
20500-39	6-4
20500-48	5-2
20500-48	6-1
20500-51	6-9
20500-53	6-27a
20500-56	5-2
20500-56	6-1
20500-58	6-2
20500-60	6-9
20503-00	5D-31
20503-01	5D-31
20504-02	5E-13
20504-02	5F-14
20504-03	5E-14
20504-03	5F-14
20504-04	5E-15
20504-04	5F-15
20505-02	5E-16
20505-02	5F-16
20505-03	5E-17
20505-03	5F-17
20507-00	5B-8
20507-01	5B-8
20508-00	7-2
20509-00	7-3
20510-00	12-6
20512-00	8-27
20512-00	8A-36
20512-00	8B-7
20515-00	5E-5
20515-00	5F-5
20516-00	5E-5
20516-00	5F-5
20517-00	12-7
20520-00	7-36
20521-02	5B-42
20521-03	5B-42
20523-00	8-47
20523-00	8B-9
20523-02	8-47
20524-00	9-7
20524-03	9-7
20524-07	9-7
20524-08	9-7
20526-00	8-4
20527-00	2-32
20527-01	2-32
20533-00	5B-12
20533-00	5B-15
20533-01	5B-12
20533-01	5B-15
20534-00	38-19
20534-00	38-29
20534-00	38-40
20534-00	38-46
20535-00	2-76
20535-01	2-76
20536-00	50-18
20537-00	8-6
20539-02	5B-13
20539-03	5B-13
20539-07	5B-11
20539-07	5C-11
20539-10	5B-31
20539-12	5D-53
20539-13	5D-53
20539-14	5D-53
20539-15	5D-53
20539-18	5B-10
20539-19	5D-3
20539-21	5D-4
20539-22	5D-4
20539-23	5B-10
20539-24	5B-13
20542-00	8-3
20543-00	8-3
20544-00	33-8
20544-29	5B-16
20546-00	5E-6
20546-01	5E-6
20546-04	5E-6
20546-05	5E-6
20546-08	5E-6
20546-09	5E-6
20546-12	5E-6
20546-13	5E-6
20547-00	7-27
20547-02	7-27
20547-03	7-27
20547-04	7-27
20547-05	7-27
20547-06	7-27
20547-07	7-27
20554-02	5E-8
20554-03	5E-8
20554-05	5E-24
20554-12	5E-19
20554-12	5F-18
20554-14	5E-57
20554-15	5E-57
20554-16	5E-20
20554-16	5F-19
20554-17	5E-20
20554-17	5F-19
20554-22	5E-7
20554-23	5E-28
20554-24	5B-16
20554-27	5E-63
20554-31	5E-7
20555-00	5-28
20555-02	5-28
20555-02	5A-27
20555-03	5-28
20556-00	8-52
20557-00	5D-5
20557-01	5D-5
20557-06	5D-7
20557-07	5D-7
20557-08	5D-8
20557-09	5D-8

Part Number	Fig. and Index
20557-17	5D-5
20557-18	5D-5
20558-02	5G-23
20560-00	38-16
20560-01	38-16
20561-03	5B-17
20561-03	5C-14
20563-00	2-33
20567-02	5D-40
20567-03	5G-40
20567-04	5D-41
20567-05	5D-33
20567-06	5D-33
20567-07	5D-32
20567-09	5D-41
20568-04	5D-9
20568-05	5D-9
20570-04	5D-10
20570-05	5D-10
20570-07	5D-10
20570-08	5D-10
20572-00	5G-9
20572-00	7-1
20572-02	5G-16
20572-04	7-1
20572-05	5G-17
20575-00	8-5
20587-02	2-29
20588-02	5G-34
20588-03	5G-45
20588-04	5G-45
20588-05	5G-41
20588-06	5G-41
20588-08	5G-35
20588-09	5G-36
20588-10	5G-42
20588-11	5G-42
20588-13	5G-37
20588-14	5G-33
20588-15	5G-43
20588-16	5G-44
20588-17	5G-44
20588-19	5G-34
20588-20	5G-33
20588-21	5G-45
20588-22	5G-45
20588-23	5G-35
20588-24	5G-36
20588-25	5G-37
20588-27	5G-34
20588-28	5G-33
20588-30	5G-37
20589-00	7-46
20590-00	7A-12
20593-00	2-34
20594-00	8-2
20594-04	8-2
20594-06	8-2

Part Number	Fig. and Index
20595-02	7-48
20596-00	7-5
20597-00	7-21
20599-00	7A-13
20600-00	5-1
20600-04	5-21
20600-05	5-21
20600-07	5-22
20600-09	5-4
20600-09	5A-4
20600-11	5-8
20600-12	5-8
20600-13	5-14
20600-14	5-11
20600-14	5A-11
20600-15	5-9
20600-15	5A-10
20600-16	5-9
20600-16	5A-10
20600-17	5-16
20600-19	5-12
20600-20	5D-27
20600-20	5E-62
20600-21	5D-27
20600-21	5E-62
20600-23	5E-49
20600-24	5B-3
20600-24	5C-3
20600-25	5B-40
20600-30	5B-39
20600-32	5B-36
20600-33	5B-36
20600-34	5C-4
20600-38	5B-2
20600-38	5C-2
20600-39	5B-37
20600-40	5B-37
20600-42	5E-41
20600-43	5E-41
20600-44	5D-11
20600-45	5D-11
20600-46	5D-13
20600-47	5D-13
20600-48	5D-2
20600-49	5D-2
20600-50	5D-28
20600-51	5D-28
20600-52	5D-29
20600-53	5D-29
20600-54	5D-25
20600-56	5E-29
20600-56	5F-28
20600-58	5E-30
20600-58	5F-29
20600-59	5E-30
20600-59	5F-29
20600-62	5D-26
20600-63	5D-26

Part Number	Fig. and Index
20600-66	5E-31
20600-67	5E-31
20600-68	5E-60
20600-70	5E-32
20600-70	5F-31
20600-75	5E-38
20600-75	5F-35
20600-78	5B-35
20600-79	5B-35
20600-80	5D-37
20600-81	5D-37
20600-83	5E-33
20600-84	5E-33
20600-85	5-11
20600-86	5-3
20600-86	5B-1
20600-87	5-5
20600-88	5-6
20600-89	5B-4
20600-91	5-19
20600-91	5D-1
20600-92	5-20
20600-92	5E-1
20600-95	5-15
20600-96	5B-34
20600-96	5C-36
20600-97	5E-56
20600-98	5E-55
20600-99	5D-34
20600-100	5-7
20600-102	5-13
20600-105	5-18
20600-106	5B-41
20600-109	5-17
20600-116	5-21
20600-119	5-17
20600-120	5-22
20600-121	5-7
20600-123	5-1
20600-124	5E-61
20600-125	5B-43
20600-125	5C-41
20600-130	5E-60
20600-134	5B-40
20600-135	5B-5
20600-135	5C-5
20600-136	5B-5
20600-136	5C-5
20600-137	5-1
20600-141	5-3
20600-141	5B-1
20600-142	5-7
20600-143	5-17
20600-146	5-1
20600-147	5-16
20600-148	5-7
20600-149	5-17
20600-153	5E-61

Part Number	Fig. and Index
20601-05	5D-38
20601-06	5D-24
20601-07	5D-12
20601-08	5D-12
20601-10	5D-24
20603-06	5B-27
20603-08	5B-27
20603-11	5B-18
20603-11	5C-15
20603-12	5B-28
20603-12	5C-45
20603-13	5B-19
20603-14	5B-19
20603-17	5C-44
20603-18	5C-44
20603-22	5B-19
20603-22	5V-16
20604-10	5D-49
20604-12	5D-49
20605-03	8-8
20605-04	8-8
20605-05	8-8
20606-00	7-4
20606-01	7-4
20609-00	8-29
20609-05	8-29
20609-07	8-29
20609-09	8-29
20609-11	8-29
20609-12	8-29
20609-13	8-29
20609-16	8-29
20609-17	8-29
20609-18	8-29
20609-19	8-29
20610-02	5B-30
20610-02	5C-46
20610-03	5B-21
20610-03	5C-18
20610-04	5B-22
20610-04	5C-19
20610-05	5B-23
20610-05	5C-20
20610-06	5G-1
20610-07	5G-1
20610-11	5G-32
20610-12	5B-21
20612-04	5D-48
20612-05	5D-48
20612-06	5D-14
20612-07	5D-14
20612-09	5D-14
20612-10	5D-14
20612-12	5D-14
20613-03	5D-42
20613-04	5D-42
20614-08	5D-43
20614-09	5D-43

Part Number	Fig. and Index
20614-10	5D-44
20614-11	5D-44
20615-02	5-10
20615-03	5-10
20615-03	5A-17
20615-04	5-10
20615-04	5A-17
20616-02	5E-35
20616-02	5F-37
20616-03	5E-35
20616-03	5F-37
20616-04	5E-37
20616-04	5F-39
20616-05	5E-37
20616-05	5F-39
20616-06	5E-51
20616-06	5F-46
20616-07	5E-51
20616-07	5F-46
20616-08	5E-36
20616-08	5F-38
20616-11	5E-34
20617-06	5B-33
20617-06	5C-35
20617-07	5B-32
20617-07	5C-34
20620-00	11-23
20622-00	7-49
20623-00	38-26
20627-06	5D-50
20627-07	5D-50
20629-00	11-5
20629-01	11-4
20630-03	8-8
20630-04	8-8
20630-05	8-8
20632-00	2-35
20632-00	4-18
20635-02	32A-13
20635-03	32A-14
20635-04	32A-15
20635-05	32A-15
20641-03	8-31
20641-04	8-31
20641-05	8-31
20648-00	15-4
20648-03	15-4
20649-00	15-21
20649-00	44-1
20649-05	15-37
20650-00	7-39
20650-00	7-41
20650-00	7A-15
20650-03	7A-61
20651-00	30-14
20651-00	30A-16
20651-02	30A-16
20651-03	30A-16

Part Number	Fig. and Index
20651-04	8A-30
20651-04	30A-16
20654-00	11A-42
20655-00	30-15
20655-00	30A-17
20656-00	3-56
20656-01	3-56
20656-06	3-56
20656-06	3A-51
20656-07	3-56
20656-07	3A-51
20659-00	32B-9
20660-05	8-7
20660-06	8-7
20662-00	8-50
20663-00	8-51
20663-02	8-57
20663-12	8-51
20663-13	8-57
20664-00	8-48
20664-02	8-50
20664-03	8-50
20664-03	8-55
20664-04	8-56
20664-05	8-48
20664-06	8-50
20664-07	8-50
20664-07	8-55
20664-08	8-56
20664-09	8-50
20665-00	8-49
20665-02	8-49
20666-02	2-69
20669-02	10-15
20669-03	10-14
20669-04	10-14
20669-05	10-18
20669-06	10-17
20669-07	10-17
20669-08	10-19
20669-09	10-16
20669-10	10-16
20670-00	5E-25
20670-00	10-58
20670-01	5E-25
20670-01	10-58
20672-00	10-9
20672-01	10-8
20672-02	10-33
20673-00	36-56
20674-00	36-51
20676-00	10-10
20676-03	10-10
20676-03	10A-9
20677-05	10-6
20677-05	10A-5
20677-06	10-7
20677-06	10A-6

Part Number	Fig. and Index
20677-07	10-7
20677-07	10A-6
20677-08	10-5
20677-08	10A-4
20677-09	10-1
20677-09	10A-1
20677-10	10-1
20677-10	10A-1
20677-13	10A-1
20677-14	10A-1
20680-02	10-55
20680-03	10-57
20689-00	8-40
20689-04	8-40
20691-00	23F-21
20693-00	23F-22
20694-00	23F-19
20695-00	23F-20
20696-00	23F-17
20697-00	23F-18
20698-00	23F-15
20699-00	23F-16
20700-00	23F-14
20702-00	23F-13
20703-02	12-19
20703-03	12-19
20703-04	12-19
20703-05	12-19
20703-06	12-19
20703-07	12-19
20703-20	12-20
20703-21	12-20
20703-22	12-20
20703-23	12-20
20703-24	12-20
20703-25	12-20
20703-26	12-21
20703-27	12-21
20705-00	11A-2
20706-00	11A-1
20706-04	11A-1
20707-02	23F-7
20707-03	23F-7
20707-06	23G-5
20707-07	23G-5
20710-00	5G-18
20710-01	5G-19
20713-00	23-14
20713-00	23A-17
20715-00	10-2
20715-00	10A-2
20716-00	23F-12
20717-00	23F-12
20718-02	23F-10
20718-03	23F-11
20719-00	10-3
20719-01	10-3

Part Number	Fig. and Index
20720-00	2-36
20721-00	2-37
20727-00	36-52
20729-00	23-2
20729-00	23D-1
20729-02	23D-5
20729-03	23D-6
20729-04	23D-7
20729-04	23E-21
20729-05	23D-8
20729-06	23D-9
20729-07	23D-10
20729-08	23D-2
20729-09	23D-3
20729-10	23D-4
20729-11	23D-12
20729-12	23D-12
20729-15	23D-11
20729-16	23-2
20730-00	23-3
20730-03	23F-3
20730-04	23F-2
20730-05	23F-2
20730-06	23F-1
20733-00	8-1
20733-03	8-1
20733-05	8-1
20735-03	19-10
20735-03	19A-14
20736-00	19A-20
20736-02	19A-20
20737-02	19-5
20737-02	19-14
20737-02	19-21
20737-02	19-53
20737-02	19A-4
20737-02	19A-17
20737-02	19A-44
20737-03	19-4
20737-03	19A-5
20737-04	19-9
20737-04	19A-12
20737-05	16-43
20737-06	16-42
20737-08	16-35
20737-13	16-42
20737-14	16-43
20737-15	23A-13
20737-16	19A-5
20742-00	11-3
20743-00	11-29
20744-00	10-23
20747-00	11-30
20752-08	19A-2
20752-09	19A-2
20752-12	19-2
20752-12	19A-2
20752-13	19-2

Part Number	Fig. and Index
20752-13	19A-2
20754-00	19-36
20754-00	19A-38
20754-02	19A-38
20757-00	16-3
20757-01	16-3
20758-02	10-21
20758-03	10-21
20758-04	10-20
20758-05	10-20
20758-06	10-21
20758-07	10-21
20758-08	10-20
20758-09	10-20
20758-12	10-21
20758-13	10-21
20758-14	10-21
20758-15	10-21
20760-00	16-40
20760-01	16-40
20767-00	16-34
20767-03	16-34
20767-04	16-34
20768-00	16-32
20768-01	16-32
20770-00	19-10
20777-00	19-8
20778-00	6-26
20780-00	6-27
20780-01	6-27
20782-00	19-25
20782-00	19A-35
20782-02	19A-35
20784-00	19-37
20784-00	19A-37
20785-00	19-35
20785-00	19A-33
20785-02	19A-33
20786-00	19-33
20786-02	19-33
20786-02	19A-30
20787-00	19-22
20787-00	19A-18
20789-00	19-24a
20789-00	19A-19
20790-00	19-20
20790-00	19A-16
20790-02	19A-16
20796-00	24-1
20796-41	24-1
20796-42	24-1
20798-04	16-26
20798-04	19-1
20798-05	16-26
20798-05	19-1
20798-06	16-26
20798-06	19-1
20798-07	16-26
20798-07	19-1
20800-00	38-7
20802-04	38-10
20803-00	24-1a
20803-00	24A-1a
20803-00	24B-2
20803-02	24C-5
20804-12	23-11
20807-00	11-13
20808-02	12-28
20808-03	12-28
20808-04	12-28
20809-02	12-29
20809-03	12-29
20809-04	12-29
20811-00	8-26
20811-02	8-26
20811-03	8-26
20811-04	8-26
20811-05	8-26
20814-00	16A-20
20815-00	16A-22
20819-00	16A-24
20819-04	16A-24
20821-00	16A-26
20821-02	16A-26
20824-00	16-65
20824-01	16-65
20825-00	16-63
20825-00	16A-10
20828-00	16-71
20829-00	16-45
20830-00	10-26
20830-00	10A-39
20833-02	19-12
20833-04	19-15
20833-06	19-12
20834-00	38-5
20834-02	38-6
20834-03	38-6
20834-05	38-5
20834-05	38-6
20834-06	38-6
20834-07	38-6
20835-00	23-24
20835-01	23-24
20836-00	38-4
20838-00	38-1
20840-03	38-8
20844-00	16-17
20845-00	16-19
20846-00	16-22
20846-01	16-22
20846-06	16-22
20846-07	16-22
20849-00	23-34
20849-00	36-22
20854-00	16-64
20854-00	16A-11
20857-00	33-5
20857-02	33-5
20858-00	50-16
20859-03	17-19
20860-02	17-21
20860-03	17-21
20860-04	17-21
20860-05	17-21
20862-00	50-35
20864-00	50-53
20865-00	49-11
20867-00	3A-83
20868-00	12-4
20869-00	12-5
20873-00	35-1
20880-00	35-11
20882-00	35-10
20882-08	35-10
20883-00	35-9
20884-00	35-8
20886-00	15-17
20892-00	5D-18
20893-00	5-26
20894-00	8-39
20895-00	8-30
20896-00	9-13
20896-03	9-13
20897-00	9-28
20897-04	9-29
20898-00	5-23
20899-02	31B-13
20899-03	31B-13
20903-00	38-47
20905-00	38-38
20907-00	38-35
20908-00	38-36
20909-00	30-17
20910-00	30-18
20910-00	30A-20
20910-00	30B-21
20912-00	5G-10
20912-01	5G-10
20918-08	11-9
20918-09	11-9
20918-10	11-9
20919-00	5G-11
20920-00	5G-12
20922-00	11-2
20923-02	11-1
20923-03	11-1
20923-04	11-1
20923-05	11-49
20923-06	11-51
20923-08	11-52
20923-10	11-53
20923-11	11-6
20923-12	11-1
20923-13	11-1
20923-14	11-1
20923-15	11-1
20923-16	11-1
20923-17	11-1
20923-18	11-1
20923-19	11-1
20923-20	11-1
20923-21	11-1
20923-22	11-1
20923-27	11-1
20923-28	11-1
20923-29	11-1
20923-30	11-1
20923-31	11-1
20923-32	11-1
20923-33	11-1
20923-38	11-1
20923-39	11-1
20923-40	11-1
20923-41	11-1
20923-42	11-1
20923-43	11-1
20923-44	11-1
20923-45	11-1
20924-00	5G-2
20925-00	34-6
20928-00	34-9
20928-02	34-9
20929-00	5G-3
20930-00	5G-4
20930-01	5G-4
20933-00	5G-13
20934-00	5G-14
20935-00	5G-5
20936-00	5G-6
20937-00	5G-30
20938-00	34-24
20942-02	36-34
20943-02	36-42
20943-03	36-35
20943-04	36-42
20943-05	36-42
20943-06	36-42
20944-02	36-1
20944-03	36-2
20944-04	36-41
20944-05	36-2
20944-06	36-2
20944-07	36-2
20944-08	39-37
20945-00	36-3
20945-03	36-3
20945-05	36-3
20945-06	36-3
20945-07	36-3
20946-00	38-20
20952-00	5D-15

Part Number	Fig. and Index
20953-00	5D-16
20954-00	5D-22
20956-00	34-28
20957-00	34-27
20959-02	5G-15
20959-03	5G-15
20962-00	5G-31
20963-00	34-26
20965-00	34-1
20965-07	34-1
20965-10	34-1
20966-00	31-17
20966-00	31B-17
20966-00	32A-22
20966-02	30C-21
20967-00	36-30
20968-00	36-26
20969-00	36-31
20971-00	5D-17
20971-09	5D-17
20973-00	34-19a
20974-00	36-27
20975-00	34-19
20975-03	34-19
20976-00	36-32
20977-02	5B-24
20977-03	5B-20
20977-03	5C-17
20977-06	5B-24
20977-06	5C-21
20982-00	30-23
20982-00	30A-23
20983-00	2-70
20983-01	2-70
20984-00	2-72
20984-01	2-72
20987-00	5D-20
20987-03	5D-21
20988-00	6-29
20989-00	5G-25
20989-05	5G-25
20993-00	30-19
20994-00	34-20
20995-00	34-21
20995-00	37-11
20996-00	34-23
20997-00	34-25
20998-00	34-22
20999-00	34-7
21001-00	34-8
21003-00	30-20
21004-00	30-21
21007-00	8-25
21007-01	8-25
21008-00	20-48
21012-02	17-9
21012-03	17-8
21013-00	17-7

Part Number	Fig. and Index
21013-02	17-7
21014-00	35-16
21015-00	20-24
21016-00	20-23
21017-00	20-32
21017-00	20A-17
21018-00	20-25
21019-00	20-28
21019-03	20-28
21020-00	20-33
21025-04	10-12
21025-04	10A-11
21027-00	10-11
21027-00	10A-10
21029-00	20-44
21030-00	20-38
21031-00	20-37
21032-00	17-5
21032-02	17-6
21033-00	17-36
21035-00	20-14
21036-00	17-1
21037-00	20-12
21038-07	17-29a
21038-08	37-3
21041-00	17-11
21042-00	35-6
21042-02	35-6
21048-00	36-23
21048-04	36-23
21048-05	36-23
21048-08	36-23
21049-00	38-14
21050-00	19-34
21051-00	20-43
21056-00	50-55
21057-00	34-4
21060-00	16-57
21062-00	25-1
21063-00	17-31
21064-00	33-7
21065-12	18-13
21065-12	18A-23
21066-00	18-10
21066-00	18A-27
21067-03	18-7
21067-03	18A-24
21068-00	16-72
21068-00	18-6
21068-01	16-72
21068-01	18-6
21072-00	3-70
21072-00	3A-115
21072-01	3-70
21072-01	3A-115
21077-00	20-6
21077-02	20A-19
21078-00	33-21

Part Number	Fig. and Index
21079-00	33-22
21080-00	17-29
21083-03	17-27
21087-00	17-9a
21087-00	17-13
21089-00	5G-48
21092-08	27-10
21092-09	27-12
21092-10	27-11
21092-11	27-3
21092-14	27-11
21092-15	27-3
21092-17	27-10
21093-00	38-21
21093-02	38-21
21098-00	20-34
21098-00	20A-1
21100-00	16-53
21101-00	16A-45
21101-00	32-9
21102-00	16A-27
21103-00	32A-27
21103-01	32A-27
21104-00	16-47
21104-01	16-47
21109-00	17-17
21112-00	18-3
21112-00	25-17
21118-03	18-1
21120-00	17-20
21124-00	30D-8
21125-00	30D-6
21126-00	30D-7
21132-00	26-2
21133-00	26-3
21134-00	26-4
21135-00	26-6
21136-00	26-7
21137-00	26-5
21138-00	26-8
21138-00	26A-12
21138-08	26A-12
21139-00	26-9
21139-09	26A-11
21139-12	26A-11
21143-00	25-13
21143-15	25-19
21143-18	25-16
21143-20	25-16
21143-23	25-20
21143-29	25-13
21146-00	26-10
21146-00	26A-14
21146-00	26B-18
21147-00	26-11
21150-00	30-26
21150-03	30A-24
21150-03	30B-27

Part Number	Fig. and Index
21150-03	31C-24
21152-00	30D-2
21152-03	30D-2
21152-06	30D-2
21154-00	8-17
21154-00	11-45
21154-00	13A-50
21154-02	8-17
21154-02	11-45
21154-02	13A-50
21154-02	13B-32
21154-03	8-17
21154-03	11-45
21154-03	13B-32
21154-04	8-17
21154-04	11-45
21154-04	13B-32
21154-05	8A-34
21156-00	8-16
21156-00	11-44
21156-00	13A-51
21156-00	13B-31
21159-00	8-18
21159-00	11-46
21159-00	13A-49
21159-00	13B-35
21163-00	30-28
21163-03	30-28
21163-05	30A-25
21163-05	30B-29
21163-05	31C-23
21165-02	27-8
21165-03	27-8
21167-00	27-2
21167-00	27A-8
21167-03	27B-12
21169-00	11-22
21172-02	11-20
21173-00	16-27
21174-00	16-28
21175-00	16-29
21175-01	16-29
21176-00	11-12
21177-00	29-23
21178-00	16-39
21179-00	28-1
21180-00	28-2
21182-00	28-3
21183-00	28-4
21184-00	28-5
21185-00	28-6
21186-00	28-7
21187-00	28-8
21189-00	29-24
21192-00	29-21
21194-02	27A-11
21204-00	24-25
21205-00	30-29

Part Number	Fig. and Index
21205-03	30-29
21206-00	16-50
21206-01	16-50
21207-00	17-34
21208-00	11-31
21209-00	11-33
21212-02	11-39
21215-00	16-55
21215-00	19-46
21215-00	19A-62
21219-00	16-54
21220-00	16-30
21221-00	16-31
21224-00	24-19
21226-00	24-18
21226-00	24A-28
21226-00	24B-38
21227-00	30-30
21227-00	30B-31
21229-00	36-49
21230-00	30D-21
21230-02	30D-22
21235-00	11-10
21244-00	5D-46
21244-00	17-25
21245-00	5D-47
21245-00	17-10
21245-05	5D-47
21245-05	17-10
21247-00	27-6
21247-00	27A-15
21248-00	33-11
21249-02	29-28
21249-03	29-28
21249-04	29-30
21249-05	29-30
21249-06	29-7
21249-08	29-29
21249-09	29-29
21249-10	29-31
21249-11	29-31
21249-12	29-8
21249-14	32-20
21249-15	32-21
21249-16	41-20
21249-17	41-19
21250-00	5F-48
21250-01	5F-48
21257-00	8-15
21257-00	11-43
21257-00	13A-48
21257-02	8-15
21257-02	11-43
21257-02	13A-48
21257-02	13B-34
21257-03	8-15
21257-03	11-43
21257-03	13B-34

Part Number	Fig. and Index
21257-04	8-15
21257-04	11-43
21257-04	13B-34
21257-06	8A-33
21257-07	8-15
21257-07	8A-33
21257-07	11-43
21257-07	13B-34
21257-08	8-15
21257-08	8A-33
21257-08	11-43
21257-08	13B-34
21260-00	13-5
21265-00	2A-29
21267-00	2-74
21267-01	2-74
21268-00	13-8
21269-00	30-32
21269-00	30A-29
21269-00	30B-33
21270-00	2A-30
21271-00	10-25
21277-00	36-48
21278-00	8-38
21279-00	17-4
21280-00	17-3
21284-00	15-5
21284-04	15-5
21284-05	15-5
21284-07	15-5
21286-00	17-30
21289-02	2-77
21290-00	3A-86
21290-02	3A-86
21292-00	8-23
21293-00	8-22
21294-00	8-24
21295-00	36-38
21296-00	14-26
21298-00	14-6
21299-00	32A-20
21301-00	32A-21
21303-00	8-28
21303-04	8-28
21303-07	8-28
21303-10	8-28
21303-13	8-28
21303-14	8-28
21303-15	8-28
21303-16	8-28
21303-25	8-28
21303-26	8-28
21303-27	8-28
21303-28	8-28
21305-00	14-1
21306-00	49-16
21306-00	50-51
21307-00	5B-38

Part Number	Fig. and Index
21307-00	5C-23
21307-00	49-9
21307-00	50-8
21308-00	49-20
21309-02	8-41
21309-03	8-41
21309-04	8-41
21309-05	8-41
21309-06	8-41
21309-06	8A-22
21317-00	18-17
21318-00	18-14
21319-02	18-4a
21319-03	18-4b
21319-04	18-4c
21319-05	18-4d
21320-02	18-16
21320-03	18-16
21320-06	18-16
21320-07	18-16
21322-02	18-15
21322-03	18-15
21322-06	18-15
21322-07	18-15
21324-00	19-18
21324-00	19A-55
21326-00	25-2
21326-03	25-2
21326-05	25-2
21327-00	50-56
21328-00	31A-8
21328-02	5D-39
21328-03	5E-52
21328-05	24D-13
21328-05	24E-29
21328-05	31D-65
21329-00	50-34
21329-02	50-34
21335-00	50-26
21336-00	8-46
21336-00	8B-10
21342-00	7-28
21343-00	14-15
21343-02	14-15
21350-08	24-28
21354-00	50-12
21355-00	50-37
21357-02	50-49
21358-02	50-63
21359-03	50-59
21360-04	50-58
21360-05	50-57
21366-02	50-11
21370-00	50-24
21373-00	8-44
21373-00	8B-54
21373-01	8-44
21373-01	8B-54

Part Number	Fig. and Index
21375-00	11-27
21377-00	35-17
21378-00	35-12
21379-00	37-7
21380-00	37-12
21382-02	37-4
21383-00	37-10
21384-00	37-10b
21384-00	37-13
21384-02	37-10b
21385-00	37-14
21388-00	37-9
21389-00	37-5
21390-00	37-8
21394-00	37-19
21395-00	37-15
21396-00	37-20
21397-02	37-1
21397-03	37-1
21398-00	37-16
21401-00	39-11
21401-00	40-6
21403-00	17-30a
21404-00	39-13
21404-00	40-8
21407-00	8-20
21407-00	11-48
21407-00	13A-53
21407-00	13B-36
21415-00	17-30c
21415-00	39-8
21415-00	40-3
21416-00	5D-52
21418-00	17-30d
21418-02	39-9
21418-02	40-4
21419-00	39-12
21419-00	40-7
21420-02	23B-7
21420-03	23B-7
21422-00	20-23
21428-00	13-11
21438-00	13-10
21439-00	13-9
21440-00	25-7
21440-01	25-7
21441-00	25-6
21445-00	5G-8
21446-00	19-47
21447-00	9-6
21448-00	9-12
21449-00	9-5
21450-00	34-22
21453-00	9-28
21453-04	9-29
21453-05	9-29
21453-06	9-28
21453-07	9-28

PILOTEN-SERVICE
Straubing LBA II-A-170
Telefon (09429) 716

Part Number	Fig. and Index
21453-08	9-29
21453-09	9-28
21453-10	9-28
21453-11	9-28
21453-12	9-28
21453-13	9-29
21453-14	9-29
21453-15	9-29
21453-16	9-29
21454-00	34-20
21457-00	15-16
21459-00	24A-19
21460-00	24-26
21460-00	24A-23
21463-00	24-27
21463-00	24A-25
21469-00	34-32
21470-00	34-19a
21471-00	5G-7
21474-00	11-54
21475-00	11-24
21476-02	11-32
21476-03	8A-11
21480-00	13-11
21480-00	13-19
21480-00	13A-19
21480-02	13-11
21480-02	13A-20
21481-00	13-4
21481-00	13-20
21481-00	13A-21
21482-00	13-24
21485-00	19-14a
21486-00	19-14b
21487-00	19-48a
21489-00	19-17
21490-00	19-48
21495-00	13-4
21496-00	13-2
21497-00	24A-1
21497-33	24A-1
21497-36	24A-1
21497-38	24A-1
21498-00	13-18
21503-00	30D-16
21508-00	36-65
21510-00	23-18
21510-00	23A-15
21512-00	26A-9
21513-00	26A-3
21514-00	26A-6
21516-00	14-24
21517-00	26A-14
21518-00	26A-13
21519-00	28-13
21523-00	32A-34
21524-00	32B-10
21524-02	32B-11
21525-00	8-53
21525-01	8-53
21525-02	8-53
21525-02	8B-55
21525-03	8-53
21525-03	8B-55
21529-00	30-16
21529-00	30B-70
21530-00	26-6
21530-00	26A-10
21532-00	26A-8
21533-00	26A-2
21535-00	26-2
21535-00	26A-4
21537-02	30D-13
21537-03	30D-11
21537-04	30D-10
21537-05	30D-9
21537-06	30D-12
21538-02	30D-19
21538-03	30D-18
21538-04	30D-17
21538-10	30D-23
21538-12	30D-24
21538-14	30D-24
21538-16	30D-24
21538-18	30D-23
21538-18	30D-24
21542-00	32B-21
21552-00	2-30
21552-01	2-30
21555-00	23D-18
21556-00	23B-2
21557-00	23F-4
21558-00	9-2
21558-04	9-2
21560-00	5B-25
21560-01	5B-25
21560-02	5C-22
21560-03	5C-22
21562-00	28-14
21563-00	36-65
21564-00	23-35
21564-00	36-69
21565-00	36-1
21565-02	36-1
21566-00	6-27
21566-01	6-27
21568-00	50-20
21570-00	13-27
21570-00	13A-24
21572-00	13-28
21572-00	13A-25
21573-00	13-29
21573-00	13A-26
21574-00	13-30
21574-00	13A-27
21574-00	13B-25
21574-00	13C-45
21575-00	13-31
21575-00	13A-22
21579-00	26A-5
21580-00	27A-10
21580-02	27-1
21587-00	19-50
21587-00	19A-73
21588-00	19-5a
21588-00	19-49
21588-00	19A-6
21589-00	19-26
21592-00	28-2
21593-00	28-1
21596-00	26A-7
21596-09	24E-63
21596-10	26A-7
21599-00	7-28
21599-02	7-28
21605-05	23-11
21605-05	23A-8
21605-08	23-7
21607-00	30-23
21607-00	30B-24
21608-00	25-5
21608-02	25-5
21608-02	25-6
21609-00	25-6
21609-02	25-5
21609-02	25-6
21616-00	24A-18
21617-00	24A-29
21624-00	29-34
21624-02	29-34
21625-00	29-33
21627-00	26-5
21628-00	26-4
21630-00	13-14
21630-00	13A-57
21639-18	8-7
21639-19	8-7
21647-00	13-5
21647-05	13-5
21647-05	13-18
21647-05	13A-23
21650-03	7-4
21657-00	30-24
21657-00	30B-25
21657-03	31C-19
21657-05	21C-18
21664-02	24D-49
21664-02	27A-1
21677-00	14-23
21658-02	27A-7
21685-04	27A-6
21686-02	27A-5
21686-02	27A-22
21686-04	27A-9
21692-00	24A-21
21693-00	24A-20
21695-32	25-13
21695-38	25-13
21698-00	15A-27
21699-00	16A-45
21699-00	32-9
21701-03	16A-31
21701-05	15A-31
21704-00	17-28
21705-00	4-19
21706-00	19-9a
21706-00	19A-13
21707-00	19-52
21707-00	19A-43
21708-00	16A-3
21709-00	19-56
21709-00	19A-52
21710-00	19-40
21710-00	19A-41
21712-00	19-36
21712-00	19A-38
21712-02	19A-38
21714-00	19-58
21715-00	19-6
21715-04	19A-8
21715-06	19A-8
21716-00	16A-38
21716-00	19-1
21716-00	19A-1
21716-02	19-6
21716-04	16A-38
21716-04	19A-1
21716-05	16A-38
21716-05	19A-1
21717-00	36-56
21719-05	19-57
21719-11	19A-49
21722-00	16A-1
21725-00	16A-5
21726-00	16A-1
21728-02	25-6
21728-03	25-5
21728-04	25-6
21729-02	11-9
21729-03	11-9
21729-04	11-9
21729-14	11-9
21729-15	11-9
21729-16	11-9
21729-17	11-9
21733-02	8-31
21733-03	8-31
21733-04	8-31
21733-14	8-31
21733-15	8-31
21733-16	8-31

Part Number	Fig. and Index
21733-19	8-31
21733-20	8-31
21733-21	8-31
21734-02	8-8
21734-03	8-8
21734-04	8-8
21734-06	8-8
21734-14	8-8
21734-15	8-8
21734-18	8-8
21734-19	8-9
21734-20	8-8
21734-21	8-8
21736-02	8-8
21736-03	8-8
21736-04	8-8
21736-14	8-8
21736-15	8-8
21736-16	8-8
21736-17	8-8
21738-02	12-28
21738-03	12-28
21738-04	12-28
21738-16	12-28
21738-17	12-28
21738-18	12-28
21738-19	12-28
21739-02	8-30
21740-00	36-22
21740-00	23-34
21740-02	23-34
21740-02	36-22
21741-00	10-32
21741-00	10A-38
21741-02	10-32
21741-02	10A-38
21744-02	12-29
21744-03	12-29
21744-04	12-29
21744-18	12-29
21744-19	12-28
21744-20	12-29
21744-21	12-29
21746-02	12-19
21746-03	12-19
21746-04	12-19
21746-05	12-19
21746-06	12-19
21746-07	12-19
21746-08	12-20
21746-09	12-20
21746-10	12-20
21746-11	12-20
21746-12	12-20
21746-13	12-20
21746-20	12-21
21746-21	12-21
21746-22	12-21

Part Number	Fig. and Index
21746-46	12-19
21746-47	12-19
21746-48	12-19
21746-49	12-19
21746-50	12-19
21746-51	12-19
21746-52	12-19
21746-53	12-19
21746-54	12-20
21746-55	12-20
21746-56	12-20
21746-57	12-20
21746-58	12-20
21746-59	12-20
21746-60	12-20
21746-61	12-20
21746-64	12-21
21746-65	12-21
21746-66	12-21
21746-67	12-21
21751-03	33A-31
21753-02	33A-30
21760-00	5D-23
21760-00	17-24
21764-02	24A-26
21764-04	24A-26
21766-00	36-70
21767-00	28-17
21779-00	14-34
21782-00	41-24
21782-00	42-18
21782-00	44-2
21782-00	45-6
21785-00	11-56
21785-02	11-56
21785-03	11-56
21786-00	23-7
21786-00	23A-4
21786-03	23-7
21797-00	5E-64
21797-01	5E-64
21798-00	5E-65
21798-01	5E-65
21810-00	31-8
21810-01	31-8
21810-04	31-8
21810-05	31-8
21817-00	31-5
21817-06	30C-7
21817-09	31B-7
21818-02	31-20
21820-02	16A-16
21820-02	24-39
21820-02	24A-35
21820-03	16A-16
21820-03	24-39
21820-03	24A-35
21820-04	16A-16

Part Number	Fig. and Index
21820-04	24-39
21820-04	24A-35
21820-04	24C-14
21821-00	30C-10
21821-00	31-1
21822-00	16-48
21824-00	8-59
21824-00	8B-56
21825-00	8-58
21826-00	11-21
21827-00	41-26
21829-00	16A-39
21829-00	19A-54
21829-01	16A-39
21830-00	16A-42
21830-01	16A-42
21831-02	16A-4
21831-03	19-56a
21831-03	19A-53
21831-03	38-4a
21831-04	19-55
21831-04	19A-46
21836-00	17-37
21837-00	23F-5
21839-00	33-21
21854-00	17-26e
21855-00	17-26g
21858-00	7-48
21868-00	16A-45
21868-00	32-9
21869-00	33-8
21870-00	37-21
21871-00	37-19
21871-02	37-19
21873-00	37-16
21878-00	49-25
21878-00	50-65
21879-00	32A-43
21879-00	49-24
21879-00	50-64
21881-00	11-36
21884-00	24-26
21884-00	24A-23
21885-03	31-20
21885-03	31B-26
21885-04	30C-33
21886-00	13A-38
21888-04	8-29
21888-05	8-29
21888-06	8-29
21888-07	8-29
21888-13	8-29
21888-14	8-29
21888-15	8-29
21888-16	8-29
21888-25	8-29
21888-26	8-29
21888-27	8-29

Part Number	Fig. and Index
21890-00	8-8a
21890-00	8-31a
21890-00	13A-44
21892-00	13A-62
21906-02	8-8
21906-03	8-8
21906-04	8-8
21906-05	8-8
21908-00	8-27
21910-02	8-31
21910-03	8-31
21910-05	8-31
21914-00	10-15
21915-07	11-9
21915-08	11-9
21915-09	11-9
21915-10	11-9
21916-00	11-49
21918-00	2-43
21918-01	2-43
21919-00	2-42
21919-01	2-42
21919-08	2-42
21919-09	2-42
21922-00	13A-33
21922-00	13B-37
21922-01	13A-32
21922-01	13B-49
21926-00	36-29
21927-00	20-2
21927-00	20A-7
21930-00	5B-14
21931-00	13A-28
21932-00	13A-29
21932-00	13B-2
21933-00	13A-30
21933-00	13B-1
21936-00	5B-26
21937-02	8-30
21943-00	24-34
21943-03	24-34
21943-05	24A-37
21945-00	13A-14
21945-00	13B-45
21947-00	25-23
21947-03	25-23
21948-00	25-30
21948-02	25-30
21949-00	25-29
21949-05	25-29
21950-07	25-13
21950-14	25-13
21950-15	25-9
21952-08	8-58
21953-00	5D-19
21953-01	5D-19
21955-02	12-14
21955-02	12A-5

Part Number	Fig. and Index
21955-03	12-13
21955-03	12A-6
21955-04	12-12
21955-04	12A-5
21955-05	12-11
21955-05	12A-6
21956-00	9-12
21956-04	9-12
21957-00	9-6
21957-04	9-6
21957-06	9-6
21957-08	9-6
21958-00	24-1
21958-15	24-1
21958-21	24-1
21958-22	24-1
21959-00	9-5
21959-04	9-5
21959-06	9-5
21960-02	12-19
21960-03	12-19
21960-04	12-19
21960-05	12-19
21960-06	12-19
21960-07	12-19
21960-08	12-19
21960-09	12-19
21960-38	12-21
21960-39	12-21
21960-40	12-21
21960-41	12-21
21960-42	12-21
21960-43	12-21
21960-44	12-21
21960-45	12-21
21960-54	12-20
21960-55	12-20
21960-56	12-20
21960-57	12-20
21960-58	12-20
21960-59	12-20
21960-60	12-20
21960-61	12-20
21967-02	8-31
21967-03	8-31
21967-04	8-31
21967-05	8-31
21967-15	8-31
21967-17	8-31
21967-22	8-31
21967-23	8-31
21967-24	8-31
21967-25	8-31
21970-02	8-26
21970-03	8-26
21970-04	8-26
21970-05	8-26
21971-02	8-8

Part Number	Fig. and Index
21971-03	8-8
21971-04	8-8
21971-05	8-8
21972-00	25-37
21973-00	25-21
21976-00	26A-7
21980-02	12-29
21980-03	12-29
21980-04	12-29
21980-05	12-29
21981-02	8-8
21981-03	8-8
21981-04	8-8
21981-05	8-8
21982-02	12-28
21982-03	12-28
21982-04	12-28
21982-05	12-28
21987-02	12-19
21987-03	12-19
21987-04	12-19
21987-05	12-19
21987-06	12-19
21987-07	12-19
21987-08	12-19
21987-09	12-19
21987-10	12-20
21987-11	12-20
21987-12	12-20
21987-13	12-20
21987-14	12-20
21987-15	12-20
21987-16	12-20
21987-17	12-20
21987-58	12-21
21987-59	12-21
21987-60	12-21
21987-61	12-21
21987-62	12-21
21987-63	12-21
21987-64	12-21
21987-65	12-21
21987-72	12-19
21987-73	12-19
21987-74	12-19
21987-75	12-19
21987-76	12-19
21987-77	12-19
21992-02	11-9
21992-03	11-9
21992-04	11-9
21992-05	11-9
21995-00	11-99
21995-02	8A-14
21995-03	8A-14
21995-04	8A-14
21995-05	8A-14
21995-05	11-99

Part Number	Fig. and Index
21995-06	8A-14
21995-06	11-99
21995-07	11-99
21995-08	11-99
21995-09	11-99
21995-10	11-99
21998-00	34-36
22010-00	8-40
22010-04	8-40
22020-00	27A-9
22020-00	27A-23
22022-00	26-4
22023-00	26-5
22024-00	26-3
22030-00	13A-55
22034-00	30A-5
22034-00	30B-50
22034-00	31C-78
22034-00	31D-73
22035-02	30A-8
22035-02	30B-53
22035-02	31D-76
22035-02	31C-81
22037-00	30C-11
22037-01	30C-11
22038-00	7A-63
22039-02	25-31
22039-03	25-31
22039-04	25-31
22046-02	8-58
22048-00	20A-12
22050-00	5G-21
22053-00	7A-1
22053-02	5G-16
22053-03	5G-17
22054-00	5G-15
22055-00	7A-16
22056-00	7A-35
22056-03	7A-35
22057-00	20-7a
22060-00	5/-9
22064-00	5G-20
22064-01	5G-20
22065-00	5G-21
22066-00	16A-47
22067-02	8-8
22067-03	8-8
22067-04	8-8
22067-05	8-8
22067-10	8-8
22067-11	8-8
22067-12	8-8
22067-19	8-8
22067-20	8-8
22067-21	8-8
22067-22	8-8
22068-02	11-9
22068-16	11-9

Part Number	Fig. and Index
22068-17	11-9
22068-18	11-9
22069-02	8-8
22069-03	8-8
22069-04	8-8
22069-05	
22069-16	8-8
22069-17	8-8
22069-18	8-8
22070-02	12-28
22070-03	12-28
22070-04	12-28
22070-05	12-28
22070-10	12-28
22070-11	12-28
22070-12	12-28
22071-02	12-29
22071-03	12-29
22071-04	12-29
22071-05	12-29
22071-10	12-29
22071-11	12-29
22071-12	12-29
22075-00	10-33
22075-01	10-33
22076-00	11-7
22077-00	10-34
22079-00	10-35
22080-00	10-36
22088-00	24A-21
22089-00	24-25
22090-00	5-34
22090-00	5-37
22090-00	5A-31
22090-00	25-22
22090-00	25A-15
22090-02	25-22
22093-00	27-8
22096-00	33-8
22103-02	17A-14
22103-02	29-35
22103-02	29A-42
22103-02	29A-45
22103-02	29B-20
22103-02	32-25
22103-02	32-30
22103-02	32-31
22103-02	41-15
22104-02	30B-63
22104-03	24E-52
22104-03	29-6
22104-03	29A-43
22104-03	29B-17
22104-03	42-19
22104-03	45-7
22104-04	41-16
22104-04	42-20
22104-04	45-8

Part Number	Fig. and Index
22104-05	29-36
22104-05	29A-44
22104-05	29A-45
22104-06	32-25
22104-06	32-27
22104-07	29-37
22104-07	29A-42
22104-07	29B-21
22104-07	32-31
22104-08	32-30
22104-10	24D-6
22104-10	31A-71
22104-11	17A-14
22104-11	29-36
22104-12	42-26
22104-12	45-71
22105-02	30B-62
22105-02	32-31
22105-03	24E-53
22105-03	29-1
22105-03	29A-43
22105-03	29B-18
22105-03	32-24
22105-03	42-19
22105-03	45-9
22105-04	17A-14
22105-04	29-4
22105-04	29A-44
22105-04	29A-45
22105-05	29-5
22105-05	29A-42
22105-05	29B-22
22105-06	42-20
22105-06	45-10
22105-07	32-21
22105-07	32-25
22105-08	24D-7
22105-08	31A-72
22105-09	42-26
22105-09	45-71
22106-00	32-26
22108-00	28-7
22109-00	15-10
22109-03	15-10
22109-04	15-10
22109-07	15-10
22112-00	5G-33
22112-02	5G-34
22114-00	30A-15
22114-00	30B-13
22114-00	31C-13
22116-02	11-9
22116-03	11-9
22116-04	11-9
22116-05	11-9
22117-00	5-35
22117-00	5A-32
22117-00	13A-58

Part Number	Fig. and Index
22117-00	13B-69
22118-02	8-30
22121-00	13A-61
22122-00	5-36
22122-00	13A-59
22122-00	13B-70
22123-00	8-4
22123-03	8-4
22136-00	30-51
22151-00	3A-33
22151-01	3A-33
22152-00	3A-3
22152-01	3A-3
22154-00	3A-7
22154-01	3A-7
22155-00	3A-27
22155-01	3A-27
22155-08	3A-27
22155-09	3A-27
22156-00	3A-29
22156-01	3A-29
22158-02	3A-32
22158-03	3A-32
22158-08	3A-32
22158-09	3A-32
22158-10	3A-32
22158-11	3A-32
22158-14	3A-32
22158-15	3A-32
22162-02	3A-30
22162-03	3A-30
22162-08	3A-30
22162-09	3A-30
22162-10	3A-30
22162-11	3A-30
22162-14	3A-30
22163-09	4-5
22164-02	7A-18
22164-03	7A-18
22168-00	7A-19
22168-02	7A-19
22169-00	20-51
22170-00	20-52
22175-00	30B-18
22175-00	30C-12
22175-00	31C-37
22175-00	31D-28
22176-00	33-8
22177-00	8-61
22177-00	8B-52
22178-02	3A-72
22178-03	3A-72
22178-04	3A-73
22178-05	3A-73
22178-06	3A-74
22178-07	3A-74
22179-00	30A-11
22179-00	30B-56

Part Number	Fig. and Index
22179-00	31C-84
22179-00	31D-79
22181-00	2-20
22181-00	3A-1
22181-01	2-20
22181-01	3A-1
22181-02	2-20
22181-02	3A-1
22181-03	2-20
22181-03	3A-1
22183-00	5G-13
22184-00	5G-14
22185-00	13A-62
22187-00	7A-21
22189-00	32B-22
22189-00	32C-15
22190-00	32B-22
22190-00	32C-15
22191-00	5G-19
22191-03	5G-19
22197-00	7-29
22197-00	7A-58
22198-00	7-30
22198-00	7A-59
22198-01	7A-59
22199-00	7A-21
22200-00	5G-22
22201-00	20A-20
22201-01	20A-21
22203-02	5G-23
22204-00	5G-24
22205-00	35-16
22206-00	5G-25
22207-00	35-9
22208-02	5G-26
22208-03	5G-27
22208-04	5G-28
22209-00	5G-29
22210-00	20A-22
22211-00	5G-10
22211-04	5G-10
22211-06	5G-10
22213-00	5G-10
22213-04	5G-10
22216-00	30B-20
22216-00	30A-19
22216-00	31C-38
22216-00	31D-29
22217-03	5D-21
22218-00	7A-27
22218-03	7A-27
22219-00	9-4
22221-00	7A-56
22221-03	7A-56
22223-00	5G-32
22224-00	7A-28
22225-00	30C-13
22226-00	20A-23

Part Number	Fig. and Index
22227-00	30B-17
22228-00	5-17
22228-03	5-18
22229-00	14A-22
22232-00	5-7
22232-02	5-12
22232-03	5D-27
22232-03	5E-62
22233-00	5-2
22233-00	6-1
22233-03	6-9
22233-04	6-10
22233-05	6-11
22233-06	5-2
22233-06	6-1
22233-09	6-2
22234-00	20A-24
22235-00	6-32
22235-02	6-32
22237-00	20A-11
22238-02	5D-51
22238-03	5D-51
22239-00	35-11
22243-00	30A-42
22243-00	30B-41
22243-00	31C-90
22243-00	31D-50
22245-00	20A-25
22246-00	6-14
22247-00	5-19
22247-00	5D-1
22249-00	20A-26
22249-03	20A-26
22250-00	20A-26
22250-03	20A-26
22254-00	30C-14
22256-00	30A-41
22256-00	30B-46
22256-00	31C-39
22257-00	5-26
22257-00	5A-26
22259-00	5G-33
22259-02	5G-34
22259-05	5G-35
22259-07	5G-37
22259-08	5G-36
22260-00	30C-15
22263-00	6-13
22263-06	6-13
22265-00	30A-43
22265-00	30B-42
22265-00	31C-91
22265-00	31D-39
22266-00	30B-10
22267-00	30C-16
22268-00	3A-82
22268-01	3A-82
22268-05	3A-82
22268-06	3A-82

PILOTEN-SERVICE
Straubing LBA II-A-170
Telefon (09429) 716

Part Number	Fig. and Index
22270-00	20A-6
22270-03	20B-12
22271-00	3A-81
22271-01	3A-81
22272-02	5D-2
22272-05	5D-2
22272-06	5D-2
22274-02	3A-79
22274-03	3A-79
22274-04	3A-80
22274-05	3A-80
22275-00	30A-26
22275-00	30B-30
22275-00	31C-22
22277-00	30A-40
22277-00	30B-47
22279-00	30A-21
22280-00	30A-39
22280-00	30B-40
22280-00	31A-42
22280-00	31C-50
22280-00	31D-30
22281-03	30C-17
22282-03	30A-22
22282-03	30B-23
22282-03	31C-25
22282-03	31D-22
22284-00	8-62
22284-00	9-15
22287-00	13B-57
22287-00	13C-50
22287-00	13C-72
22288-00	20A-28
22289-00	8-8a
22289-00	8-31a
22289-00	13B-20
22291-00	26A-7
22295-00	13B-29
22295-00	13C-41
22297-00	30B-22
22300-02	4-4
22300-03	4-4
22300-06	4-5
22301-00	13B-12
22303-02	4-26
22303-02	31B-31
22304-00	13B-13
22305-00	13B-66
22306-00	30A-4
22306-00	30B-49
22306-00	31C-77
22306-00	31D-80
22312-00	30A-3
22312-00	30B-48
22312-00	31C-76
22312-00	31D-72
22313-00	20A-18
22320-00	20A-29

Part Number	Fig. and Index
22321-00	20A-30
22323-00	20A-2
22324-02	20A-31
22324-03	20A-32
22326-00	51-2
22327-02	51-3
22327-03	51-4
22329-00	51-1
22330-00	7A-29
22334-00	8B-18
22334-00	8B-24
22334-00	13B-17
22336-00	13B-16
22337-00	13B-15
22338-00	13B-19
22338-01	13B-19
22339-00	13B-14
22339-00	13C-39
22340-00	8-23
22340-03	8-23
22341-00	7A-30
22343-00	13B-10
22343-00	13C-47
22344-00	7A-31
22345-00	7A-32
22349-02	7A-33
22349-05	7A-33
22352-00	13B-26
22352-00	13C-46
22353-00	13B-23
22353-00	13C-43
22354-00	13B-24
22354-00	13C-44
22358-00	51-9
22362-00	15-12
22362-06	15-12
22363-00	13B-22
22363-00	13C-42
22364-02	8-60
22364-03	8-60
22364-04	8-60
22364-05	8-60
22365-00	20A-10
22366-00	20A-9
22367-00	5D-18
22367-02	5D-18
22369-02	32B-6
22369-03	32B-19
22369-03	32C-18
22369-04	32B-3
22369-05	30A-44
23369-05	30B-44
22369-14	24D-80
22369-14	24E-79
22369-14	31D-93
22369-19	31A-18
22369-27	13C-2
22369-31	15B-62

Part Number	Fig. and Index
22369-31	15C-60
22370-00	35-8
22374-02	13B-28
22374-02	13C-40
22374-03	13B-28
22374-03	13C-40
22394-02	11-9
22394-03	11-9
22394-04	11-9
22394-05	11-9
22396-02	8-26
22396-03	8-26
22396-04	8-26
22396-05	8-26
22399-02	11-1
22399-03	11-1
22399-04	11-1
22399-05	11-1
22399-06	11-1
22400-00	5-1
22403-00	30-52
22403-00	30B-28
22404-00	30-25
22404-00	30B-26
22406-02	8-8
22406-03	8-8
22406-04	8-8
22406-05	8-8
22411-02	8-8
22411-03	8-8
22411-04	8-8
22411-05	8-8
22413-10	8-30
22413-11	8-30
22413-12	8-30
22413-13	8-30
22416-00	25-28
22416-02	25-28
22421-00	5B-42
22421-00	5C-40
22422-02	8-31
22422-03	8-31
22422-04	8-31
22422-05	8-31
22424-02	12-19
22424-03	12-19
22424-04	12-19
22424-05	12-19
22424-06	12-19
22424-07	12-19
22424-08	12-19
22424-09	12-19
22424-10	12-21
22424-11	12-21
22424-12	12-21
22424-13	12-21
22424-14	12-21
22424-15	12-21
22424-16	12-21

Part Number	Fig. and Index
22424-17	12-21
22424-18	12-20
22424-19	12-20
22424-20	12-20
22424-21	12-20
22424-22	12-20
22424-23	12-20
22424-24	12-20
22424-25	12-20
22427-00	45-11
22433-00	13B-59
22433-00	13C-51
22434-02	12-30
22434-03	12-30
22438-02	12-28
22438-03	12-28
22438-04	12-28
22438-05	12-28
22439-02	12-29
22439-03	12-29
22439-04	12-29
22439-05	12-29
22448-00	8B-22
22448-00	8B-27
22451-02	30C-18
22451-03	30C-18
22452-00	8-40
22452-00	8B-12
22452-03	8-40
22454-00	8-39
22454-00	8B-11
22454-02	8B-11
22458-00	30A-6
22458-00	30B-51
22458-00	31C-79
22458-00	31D-74
22459-00	13B-56
22459-00	13C-52
22460-00	13B-58
22460-00	13C-53
22462-02	7A-29
22463-00	13B-55
22463-02	13C-49
22467-02	9-29
22467-03	9-29
22467-04	9-29
22467-05	9-29
22468-02	9-28
22468-03	9-28
22468-04	9-28
22468-05	9-28
22468-07	9-28
22468-08	9-28
22468-09	8A-28
22468-10	8A-28
22468-11	8A-28
22468-13	9-28
22468-14	9-28
22468-15	9-28

Part Number	Fig. and Index
22468-16	9-28
22468-17	9-28
22468-18	9-28
22468-20	9-28
22468-21	9-28
22468-22	9-28
22468-23	9-28
22468-24	9-28
22468-25	9-28
22470-02	13B-61
22470-03	13B-61
22470-04	13B-61
22470-04	13C-54
22470-05	13B-61
22470-05	13C-54
22470-08	13C-54
22470-09	13C-54
22470-11	17A-5
22472-02	13B-62
22472-03	13B-62
22472-04	13B-62
22472-04	13C-55
22472-05	13B-62
22472-05	13C-55
22472-10	13C-55
22472-13	13C-55
22472-14	17A-3
22472-16	17A-4
22474-06	31B-11
22475-00	29-21
22478-00	13B-78
22478-00	13C-64
22478-08	13C-64
22482-00	13B-79
22482-00	13C-65
22484-00	13B-7
22486-00	5G-19a
22486-00	13B-67
22487-00	13B-6
22492-00	13B-4
22492-03	13B-5
22493-00	3-3
22493-01	3-3
22494-00	24A-21
22495-00	24A-20
22497-08	13C-86
22497-09	13C-85
22497-10	13C-84
22498-00	29-10
22498-00	29-11
22502-03	13C-34
22502-04	13B-21
22502-04	13C-9
22502-04	24D-72
22502-05	13B-21
22502-18	13B-8
22502-18	24F-7
22502-18	27C-9

Part Number	Fig. and Index
22502-20	13C-71
22502-21	24A-34
22502-21	30-33
22502-21	30B-71
22502-24	13C-74
22502-25	13A-54
22502-35	13C-35
22502-46	13C-5
22502-49	13C-36
22502-49	13C-68
22502-50	13C-37
22502-51	24C-38
22502-53	24C-57
22502-55	28A-8
22502-56	13C-6
22502-60	26A-15
22502-60	26B-19
22502-61	24E-55
22502-61	31D-86
22502-62	31C-75
22502-63	24F-8
22502-63	27C-23
22502-69	13C-75
22502-90	24B-34
22503-00	30C-31
22509-00	16-40
22509-01	16-40
22512-00	16-45
22514-00	14A-13
22520-00	5-33
22520-00	5A-30
22522-00	20A-75
22522-03	10-57
22530-00	44-14
22530-00	45-12
22531-00	44-5
22532-00	44-3
22546-00	44-27
22546-00	45-13
22546-02	45-13
22549-00	6-35
22549-01	6-35
22550-00	6-24
22552-02	10-55
22555-06	6-13
22556-00	10-58
22562-00	5E-3
22562-00	5F-3
22562-01	5E-3
22562-01	5F-3
22564-00	5G-30
22566-00	5-3
22566-00	5B-1
22566-06	5-6
22570-00	11-2
22572-10	5D-44
22572-11	5D-44
22572-12	5D-43

Part Number	Fig. and Index
22572-13	5D-43
22573-00	5-2
22573-00	6-1
22573-03	6-9
22573-06	6-8
22573-07	6-7
22573-28	6-2
22573-30	6-4
22574-02	6-6
22574-03	6-23
22574-04	6-19
22574-07	6-19
22574-08	6-22b
22576-00	5G-46
22576-01	5G-46
22577-00	16-32
22578-02	5E-53
22578-03	5E-54
22579-00	5-17
22579-03	5-18
22579-03	5A-19
22582-03	5B-10
22582-04	5B-13
22582-07	5B-31
22587-00	5E-48
22587-00	5F-45
22594-02	27-5
22600-02	5E-47
22600-03	5E-47
22604-00	5E-44
22604-01	5E-44
22604-01	5E-45
22606-03	5E-8
22606-08	5B-16
22607-00	5-7
22607-03	5-15
22607-05	5-13
22607-10	5E-61
22607-16	5D-29
22607-24	5E-61
22607-25	5-12
22607-30	5-16
22607-31	5-14
22607-31	5A-14
22607-32	5-7
22608-00	10-24
22608-00	10A-48
22609-00	10-23
22609-00	10A-42
22615-00	11-84
22616-00	10-25
22616-00	10A-41
22617-00	5G-33
22617-02	5G-34
22617-03	5G-44
22617-04	5G-44
22617-05	5G-35
22617-06	5G-36

Part Number	Fig. and Index
22617-07	5G-40
22618-02	5F-37
22618-03	5F-37
22618-04	5E-34
22618-04	5F-36
22618-05	5F-38
22618-06	5E-34
22618-06	5F-36
22618-08	5F-36
22620-04	5E-41
22620-05	5E-41
22620-06	5E-43
22620-08	5E-39
22620-08	5F-34
22620-09	5E-40
22620-09	5F-34
22620-10	5E-31
22620-11	5E-31
22620-14	5E-46
22620-15	5E-46
22620-20	5-20
22620-20	5E-1
22620-22	5-20
22620-22	5E-1
22620-23	5E-41
22620-24	5E-41
22622-00	5G-19a
22622-00	13B-67
22625-02	7A-21
22625-03	7A-21
22625-03	24D-56
22625-04	7A-21
22627-00	39-45
22627-02	40-55
22628-00	9-14
22629-00	5-19
22629-00	5D-1
22629-02	5D-25
22630-04	5D-24
22630-09	5D-24
22633-02	29-9
22633-03	24D-45
22633-03	24E-49
22633-04	29B-1
22633-05	29B-2
22635-00	5G-9
22635-02	5G-9
22635-03	5G-9
22639-00	11-80
22641-00	11-61
22643-00	11-79
22648-00	11-71
22649-00	3A-83
22650-00	11-2
22654-00	2B-2
22654-01	2B-2
22655-00	23A-34
22655-02	23A-35

Part Number	Fig. and Index
22659-02	2B-4
22659-03	2B-5
22659-04	2B-5
22659-06	2B-6a
22659-06	2B-7
22659-06	2B-36
22659-07	2B-6
22659-07	2B-6a
22659-07	2B-7
22659-07	2B-36
22660-04	7A-28
22660-05	24D-53
22660-06	7A-28
22660-08	7A-28
22660-09	24D-53
22663-00	39-3
22667-00	2B-14
22668-02	2B-13
22668-02	2B-38
22668-03	2B-15
22668-06	2B-33
22668-07	2B-32
22669-00	2B-12
22676-00	11-60
22679-00	11-59
22679-04	11-59
22680-00	11-1
22683-00	2B-11
22683-02	2B-11
22686-02	3A-101
22686-03	3A-101
22686-08	3A-100
22686-09	3A-100
22686-10	3A-99
22686-11	3A-99
22688-00	39-4
22688-00	40-18
22690-00	5-1
22690-12	5-1
22694-00	39-5
22694-03	39-5
22695-00	39-6
22695-03	39-6
22697-00	2-33
22697-00	39-21
22697-07	2-33
22697-07	39-21
22697-10	2-33
22697-10	39-21
22699-00	2-9
22699-00	2B-1
22699-01	2-9
22699-01	2B-1
22699-02	2B-21
22699-03	2B-23
22699-08	2B-31
22699-09	2B-31
22699-10	2B-30

Part Number	Fig. and Index
22699-11	2B-30
22699-12	2B-29
22699-13	2B-29
22699-14	2B-28
22699-15	2B-28
22699-17	2B-24
22699-19	2B-26
22699-29	2B-35
22699-31	2-9
22699-31	2B-1
22699-32	2B-29
22699-33	2B-29
22699-36	2B-37
22699-37	2B-37
22700-00	2-20
22700-00	3A-1
22700-01	2-20
22700-01	3A-1
22700-02	4-15
22700-03	4-15
22700-04	4-14
22700-05	4-14
22700-06	4-13
22700-07	4-13
22700-08	4-11
22700-09	4-11
22701-00	2-20
22701-00	3A-1
22701-01	2-20
22701-01	3A-1
22701-02	4-11
22701-03	4-11
22703-00	31B-32
22703-01	31B-32
22704-00	2B-8
22704-00	2B-9
22704-01	2B-8
22704-01	2B-9
22705-02	2B-3
22705-02	2B-10
22705-03	2B-3
22705-03	2B-10
22705-05	2B-4
22705-06	2B-4
22706-00	3A-89
22706-01	3A-89
22708-00	25A-7
22708-00	25B-28
22709-00	25-37
22709-04	25-37
22709-04	25B-29
22710-00	3A-88
22710-01	3A-88
22714-00	2B-17
22714-00	2B-19
22714-00	2B-22
22714-00	2B-25
22716-00	3A-87

Part Number	Fig. and Index
22716-01	3A-87
22717-00	33-8
22720-00	9-12
22724-00	5G-25
22725-00	7A-19
22725-03	7A-19
22725-04	24D-51
22725-05	7A-19
22725-08	7A-19
22726-00	2B-27
22727-02	3A-98
22727-03	3A-98
22727-08	3A-97
22727-09	3A-97
22727-10	3A-96
22727-11	3A-96
22728-02	40-56
22729-00	40-57
22732-02	7A-18
22732-02	24D-57
22733-02	3B-24
22733-03	3B-24
22733-04	3B-22
22733-04	3B-25
22733-04	3B-26
22733-04	3B-30
22733-05	3B-22
22733-05	3B-25
22733-05	3B-26
22733-05	3B-30
22733-06	3B-27
22733-07	3B-27
22733-08	3B-29
22733-09	3B-29
22739-00	24D-52
22740-00	36-56
22740-00	39-59
22740-00	40-41
22744-02	3A-95
22744-03	3A-95
22744-08	3A-94
22744-09	3A-94
22744-10	3A-93
22744-11	3A-93
22748-00	36-58
22748-01	36-58
22751-02	4-12
22751-03	4-12
22751-04	4-12
22751-05	4-12
22751-06	4-12
22751-07	4-12
22752-00	24C-1
22755-02	3A-92
22755-03	3A-92
22755-08	3A-91
22755-09	3A-91
22755-10	3A-90

Part Number	Fig. and Index
22755-11	3A-90
22756-00	14A-26
22760-00	31B-66
22760-01	31B-66
22761-00	3B-1
22761-01	3B-1
22763-00	3A-11
22763-01	3A-11
22768-00	3B-23
22769-02	3A-104
22769-03	3A-104
22769-08	3A-103
22769-09	3A-103
22769-10	3A-102
22769-11	3A-102
22774-00	24C-2
22775-00	19A-30
22778-00	3A-112
22778-01	3A-112
22779-00	7A-1
22779-02	5G-16
22779-03	5G-17
22779-04	5G-16
22779-05	7A-1
22780-00	3B-28
22782-00	31A-37
22782-02	31A-37
22785-00	19A-19
22786-00	3A-39
22786-01	3A-39
22787-00	3B-9
22787-01	3B-9
22788-00	3B-4
22788-01	3B-4
22788-04	3B-4
22789-00	3B-10
22789-01	3B-10
22789-04	3B-11
22789-05	3B-11
22790-00	30C-37
22790-02	30C-37
22790-03	24D-63
22790-03	30C-37
22790-05	30C-37
22790-08	30C-37
22790-09	30C-37
22790-10	30C-37
22791-00	31A-19
22793-00	39-44
22795-00	30B-59
22795-00	31C-52
22795-04	30B-59
22795-05	8A-30
22795-05	30B-59
22795-09	31C-52
22795-09	31D-32
22795-11	31D-32
22795-13	31D-32

Part Number	Fig. and Index
22795-15	31D-32
22797-00	3B-13
22797-01	3B-13
22801-00	3B-12
22801-01	3B-12
22803-00	3B-5
22803-01	3B-5
22803-04	3B-5
22803-05	3B-5
22805-00	34-6
22807-00	30A-18
22807-00	30B-57
22810-00	16A-38
22810-00	19A-1
22819-00	3A-3
22819-01	3A-3
22820-00	13C-47
22824-00	31A-20
22828-00	31A-36
22828-05	31A-36
22828-06	30C-36
22828-07	30C-36
22828-08	24D-2
22828-08	30C-36
22828-10	30C-36
22828-13	30C-36
22828-14	30C-36
22828-15	30C-36
22829-00	3A-7
22829-01	3A-7
22835-00	3A-2
22835-01	3A-2
22838-00	30B-58
22838-00	31C-51
22838-03	30B-58
22838-04	30B-58
22838-06	31C-51
22838-06	31D-31
22838-07	31D-31
22838-08	31D-31
22838-09	31D-31
22840-00	11-58
22840-02	11-58
22842-00	13C-62
22843-00	24D-64
22843-00	30B-60
22843-00	30C-40
22843-00	31A-38
22843-00	31C-55
22843-00	31D-35
22844-00	3A-79
22844-01	3A-79
22846-00	31B-46
22852-00	36-42a
22852-00	39-61
22852-00	40-49
22853-00	36-47b
22853-00	39-62

Part Number	Fig. and Index
22853-00	40-50
22854-00	39-63
22854-00	40-51
22855-00	36-46
22855-00	39-60
22855-00	40-48
22856-02	33-5
22856-03	33-5
22856-04	33-5
22857-02	25-13
22857-12	25-13
22858-00	33-11
22858-04	33-11
22858-07	33-11
22860-02	11-81
22863-00	16A-5
22864-00	38-10
22866-00	3B-8
22866-01	3B-8
22870-02	5D-43
22870-03	5D-43
22870-04	5D-44
22870-05	5D-44
22874-00	26C-1
22878-00	39-68
22880-00	23A-38
22882-00	23A-37
22884-00	3A-80
22884-01	3A-80
22885-00	3A-11
22885-01	3A-11
22886-02	39-31
22886-03	39-32
22886-04	39-32
22887-00	38-4
22889-00	13C-48
22893-00	6-17
22900-08	4-5
22900-09	4-5
22900-10	4-4
22900-11	4-4
22900-16	4-6
22900-17	4-6
22900-20	4-1
22900-21	4-1
22902-00	3A-76
22902-01	3A-76
22904-00	6-16
22905-00	31A-10
22908-00	3A-14
22908-01	3A-14
22917-02	3A-105
22917-03	3A-105
22917-04	3A-106
22917-05	3A-106
22917-06	3A-107
22917-07	3A-107
22917-08	3A-108

Part Number	Fig. and Index
22917-09	3A-108
22917-10	3A-109
22917-11	3A-109
22917-12	3A-110
22917-13	3A-110
22918-00	24C-3
22922-00	26C-10
22923-00	26C-11
22928-00	26C-2
22929-00	26C-3
22930-00	26C-4
22933-00	26C-7
22942-00	31-15
22942-01	31-15
22943-00	16-49
22944-02	11-8
22944-03	11-8
22944-04	8-21
22944-05	8-21
22944-06	8A-19
22944-07	8A-19
22944-08	8A-9
22944-09	8A-9
22944-10	8A-9
22944-11	8A-19
22947-00	34-4
22951-00	32-42
22953-00	32-41
22955-00	12-19
22955-01	12-19
22955-04	12-21
22955-05	12-21
22955-06	12-20
22956-00	12-29
22957-00	12-28
22966-02	36-1
22966-03	36-2
22968-00	36-65
22970-00	31A-11
22977-00	31B-40
22977-01	31B-40
22977-02	31B-44
22977-03	31B-44
22978-00	31B-33
22978-01	31B-33
22978-02	31B-38
22978-03	31B-38
22979-00	12-30
22982-00	31B-59
22984-00	18-12
22984-00	18A-22
22984-01	18-12
22984-01	18A-22
22987-00	31B-54
22987-01	31B-54
22991-00	30D-12
22993-00	8-8
22998-02	4-20

Part Number	Fig. and Index
22998-03	4-20
23000-00	31A-12
23003-00	8-8
23006-00	24C-17
23007-00	24C-16
23013-00	39-7
23013-00	40-2
23015-00	7A-18
23016-00	11-9
23016-02	11-9
23018-02	8-26
23018-03	8-26
23018-06	8A-37
23018-08	8A-37
23018-14	8A-37
23018-19	8-26
23018-20	8-26
23018-21	8-26
23019-00	31A-21
23019-03	30B-21
23019-03	31C-21
23019-03	31D-26
23021-02	8-8
23023-03	30B-22
23023-03	31C-20
23023-03	31D-21
23023-05	31A-13
23023-07	31A-13
23027-00	11-99
23033-02	8-26
23033-03	8-26
23033-04	8A-37
23033-05	8A-37
23033-06	8A-37
23033-07	8-26
23033-08	8-26
23033-09	8-26
23035-02	8-60
23035-03	8-60
23035-06	8A-42
23035-08	8A-42
23035-10	8A-42
23035-15	8-60
23035-16	8-60
23035-17	8-60
23036-02	9-29
23036-03	9-29
23036-06	8A-29
23036-08	8A-29
23036-10	8A-29
23036-18	9-29
23036-19	9-29
23036-20	9-29
23036-22	9-29
23036-24	9-29
23036-26	9-29
23036-28	9-29
23036-30	9-29

Part Number	Fig. and Index
23037-02	8-28
23037-03	8-28
23037-08	8A-39
23037-11	8A-39
23037-14	8A-39
23037-23	8-28
23037-24	8-28
23037-25	8-28
23037-26	8-28
23040-02	8-58
23040-03	8-58
23040-04	8A-24
23040-05	8A-24
23040-08	8-58
23040-08	8A-24
23040-09	8-58
23040-09	8A-24
23040-10	8A-24
23040-11	8-58
23040-12	8B-32
23040-13	8B-32
23040-14	8B-32
23042-00	17-30a
23042-00	39-10
23042-00	40-5
23044-00	8-31
23045-00	5-3
23045-00	5B-1
23046-00	39-14
23046-00	40-9
23047-00	33-35
23049-00	33-34
23050-00	33-33
23054-04	4-2
23054-05	4-2
23055-00	5-20
23055-00	5E-1
23056-00	5-7
23056-02	5-12
23056-02	5A-12
23056-03	5-16
23056-04	5-11
23056-04	5A-11
23058-00	5-1
23058-02	5-1
23060-00	51-9
23062-00	5-19
23062-00	5A-20
23062-00	5D-1
23062-02	5A-20
23062-02	5D-1
23064-00	20A-19
23066-00	5G-33
23066-02	5G-34
23068-00	5-17
23068-02	5-17
23068-03	5A-18
23069-00	30C-14

Part Number	Fig. and Index
23070-00	24D-8
23070-00	24E-5
23070-00	31D-20
23073-00	5D-45
23073-00	24D-61
23073-00	31A-7
23074-00	7A-56
23077-00	24D-48
23077-03	26A-5
23081-00	24D-9
23081-00	31A-43
23081-00	31D-37
23083-00	36-56a
23087-00	2B-39
23087-00	39-34
23090-00	8A-1
23090-01	8A-1
23090-20	8A-2
23090-21	8A-2
23090-24	8A-3
23090-25	8A-3
23090-26	8A-2
23090-27	8A-2
23090-28	8A-3
23090-29	8A-3
23090-30	8A-1
23090-31	8A-1
23090-32	8A-1
23090-33	8A-1
23090-34	8A-2
23090-35	8A-2
23090-36	8A-3
23090-37	8A-3
23090-38	12-19
23090-39	12-19
23090-40	12-21
23090-41	12-21
23090-46	12-19
23090-47	12-19
23090-48	12-21
23090-49	12-21
23090-50	12-19
23090-51	12-19
23090-52	12-21
23090-53	12-21
23090-58	12-19
23090-59	12-19
23090-60	12-21
23090-61	12-21
23090-62	12-20
23090-63	12-20
23090-69	12-20
23090-70	12-20
23090-78	12-20
23090-79	12-20
23090-93	12-20
23090-94	12-20
23090-95	12-19

Part Number	Fig. and Index
23090-96	12-19
23090-97	12-19
23090-98	12-19
23090-99	12-19
23090-100	12-19
23090-101	12-19
23090-102	12-19
23090-103	12-21
23090-104	12-21
23090-105	12-21
23090-106	12-21
23090-107	12-21
23090-108	12-21
23090-109	12-21
23090-110	12-21
23090-115	12-20
23090-116	12-20
23090-117	12-20
23090-118	12-20
23090-119	12-20
23090-120	12-20
23090-121	12-20
23090-122	12-20
23094-00	24D-47c
23094-00	24E-62
23097-00	24D-47b
23100-00	51-1
23103-00	17-19
23105-00	11-57
23107-00	30-16
23107-00	30B-70
23109-00	16A-17
23114-00	24D-47
23114-08	24E-59
23115-00	17-21
23117-00	39-49
23117-00	40-58
23123-02	25A-13
23123-02	25B-23
23123-03	25A-14
23123-03	25B-23
23123-04	25A-14
23123-04	25B-23
23123-05	25A-13
23123-05	25B-23
23124-02	25A-9
23124-02	25B-25
23124-03	25A-10
23124-03	25B-25
23124-04	25A-10
23124-04	25B-25
23124-05	25A-9
23124-05	25B-25
23125-00	25A-12
23125-00	25B-24
23125-01	25A-12
23125-01	25B-24
23128-02	10-17

Part Number	Fig. and Index
23128-03	10-18
23128-04	10-17
23129-02	10-20
23129-03	10-20
23129-04	10-20
23129-05	10-20
23132-00	25A-22
23134-00	25-23
23142-00	5D-20
23148-00	45-14
23152-00	18A-29
23152-01	18A-29
23159-00	24D-50
23159-00	27A-13
23160-00	37-15
23160-02	37-15
23164-00	31B-37
23165-00	37-2
23170-00	37-16
23171-00	37-20
23175-00	23A-42
23175-00	36-22
23177-00	29-3
23179-00	36-69
23183-00	5F-62
23183-00	11A-41
23184-02	11A-1
23194-00	24D-25
23194-00	31D-71
23195-02	24D-26
23195-02	24E-35
23195-02	31D-25
23195-04	24D-71
23195-04	31A-14
23195-10	24D-27
23195-10	24E-32
23195-10	31A-15
23195-10	31D-23
23195-11	31A-16
23196-00	2B-34
23210-00	33-32
23210-02	33-32
23215-02	7A-21
23215-03	24D-56
23215-04	7A-21
23215-05	7A-21
23215-05	24E-69
23215-06	7A-21
23215-07	7A-21
23215-07	24E-69
23217-00	7A-18
23218-00	7A-18
23218-00	24D-57
23225-00	39-1
23225-00	40-22
23226-00	39-27
23226-02	40-21
23227-00	38-21

Part Number	Fig. and Index
23227-02	38-21
23229-00	33-31
23230-00	30B-19
23230-00	31A-44
23230-00	31C-57
23230-00	31D-49
23232-00	11-74
23238-00	11-76
23238-02	8A-13
23240-00	11-75
23241-00	11-49
23241-02	11-49
23243-00	37-9
23244-00	37-1
23244-02	37-1
23245-00	37-10c
23252-02	8A-3a
23252-04	8A-3a
23252-06	12-27j
23252-08	12-27j
23252-10	12-27j
23252-12	12-27j
23256-02	8-45
23256-03	8-45
23268-00	7A-26a
23269-00	8A-43
23269-03	8-52
23269-03	8A-43
23269-05	8-52
23269-07	8B-35
23270-05	8A-10
23270-06	8A-10
23270-06	11-9
23270-07	8A-10
23270-09	11-9
23270-13	11-9
23270-14	11-9
23274-00	8A-4
23274-11	8A-4
23274-12	8A-4
23274-13	12-28
23274-14	12-28
23274-15	12-28
23274-16	12-28
23274-17	12-28
23274-18	12-28
23274-19	12-28
23274-20	12-28
23275-00	8A-5
23275-10	8A-5
23275-13	8A-5
23275-14	12-29
23275-15	12-29
23275-16	12-29
23275-17	12-29
23275-18	12-29
23275-19	12-29
23275-20	12-29

Part Number	Fig. and Index
23275-21	12-29
23276-00	8A-17
23276-09	8A-17
23276-17	8-8
23276-22	8-8
23276-26	8-8
23276-27	8-8
23277-00	8A-20
23277-09	8A-20
23277-13	8-31
23277-20	8-31
23277-21	8-31
23277-22	8-31
23278-00	8A-18
23278-05	8-8
23278-06	8A-18
23278-12	8-8
23278-13	8-8
23278-17	8-8
23283-00	5B-6
23283-00	5C-6
23283-01	5B-6
23283-01	5C-6
23284-00	5B-9
23284-00	5C-9
23285-00	5B-9
23285-00	5C-9
23287-00	10-37
23287-01	10-37
23288-00	5B-29
23288-01	5B-29
23289-00	10-38
23289-01	10-38
23290-00	10-39
23290-01	10-39
23291-02	10-40
23291-03	10-40
23291-04	10-41
23291-05	10-41
23293-02	10-42
23293-02	10A-24
23293-03	10-43
23294-02	11-97
23294-03	10A-25
23294-03	11-98
23295-03	10-44
23296-00	24D-46
23296-00	24E-54
23296-00	29A-46
23297-02	10-45
23297-03	10-46
23297-04	10-46
23298-00	8A-15
23298-06	8A-15
23298-10	8-1
23298-10	8A-15
23298-11	8-1
23298-11	8A-15

Part Number	Fig. and Index
23298-12	8A-15
23298-23	8-1
23298-29	8-1
23298-32	8-1
23300-00	24D-54
23302-00	10-50
23302-00	10A-33
23303-00	8-13a
23303-00	10-51
23303-00	10A-34
23304-00	24D-55
23304-00	24E-68
23304-00	31D-84
23305-02	8A-23
23305-05	8A-23
23305-09	8A-23a
23305-10	8A-23a
23305-11	8-45a
23305-11	8A-23a
23305-16	8A-23
23305-17	8A-23
23305-18	8-45
23305-18	8A-23
23305-30	8-45a
23305-31	8-45
23305-34	8-45a
23305-34	8A-23a
23305-35	8-45
23305-35	8A-23
23305-36	8-45a
23305-36	8A-23a
23305-37	8-45
23305-37	8A-23
23305-42	8-45a
23305-43	8-45
23305-44	8-45a
23305-45	8-45
23305-52	8-45
23305-52	8B-36
23305-54	8-45a
23307-00	8A-16
23308-02	8A-12
23308-02	11-50
23308-03	8A-12
23308-03	11-50
23308-04	8A-12
23308-05	11-50
23308-06	11-50
23309-00	8A-8
23310-00	8A-8
23313-02	8A-25
23313-02	10-47
23313-03	8A-25
23313-03	10-47
23313-04	8A-25
23313-05	10-47
23313-06	10-47
23313-07	10-47

Part Number	Fig. and Index
23314-02	8A-26
23314-02	10-48
23314-03	8A-26
23314-03	10-48
23314-04	8A-26
23314-05	10-48
23314-06	10A-20
23314-07	10A-20
23315-02	8A-27
23315-02	10-49
23315-03	8A-27
23315-03	10-49
23315-04	8A-27
23315-05	10-49
23315-06	10-49
23315-07	10-49
23317-00	30-23
23317-00	30B-24
23317-00	31C-26
23318-00	30-23
23318-00	30A-23
23319-00	24D-28
23319-00	24E-33
23319-00	31A-59
23319-00	31D-42
23322-00	34-6
23323-00	34-4
23330-00	31B-35
23331-00	25-33b
23331-00	25B-15
23332-00	25-10
23332-00	25-33c
23332-00	25B-14
23333-00	24D-43
23333-00	24E-46
23333-04	31D-38
23336-00	12-8
23336-01	12-8
23337-00	51-1
23339-02	13B-54
23339-04	13C-3
23340-00	30D-15
23342-00	9-3
23342-01	9-3
23345-00	24D-59
23346-00	11-88
23346-04	11-88
23347-00	33-35
23347-00	33A-12
23349-00	11-94
23349-02	11-94
23350-02	11-87
23350-03	11-87
23353-00	11-89
23353-04	11-89
23354-00	11-71
23355-00	8A-14a
23356-00	11-74

Part Number	Fig. and Index
23358-00	33-24
23360-00	11-2
23360-06	11-2
23360-09	11-2
23363-00	11-1
23364-00	8A-8
23364-00	11-1
23367-00	7A-21
23394-00	34-19c
23398-00	8-2
23398-00	8A-16
23398-02	8-2
23400-00	5G-18
23414-00	23G-6
23415-00	23G-7
23416-00	23G-8
23417-00	23G-9
23418-00	23G-10
23419-00	23G-11
23420-00	23G-12
23426-02	31-8
23426-02	31B-14
23426-03	31-8
23426-03	31B-14
23426-04	30C-19
23426-05	30C-19
23427-00	23G-13
23428-00	23G-14
23431-00	23G-21
23433-00	23G-22
23435-02	23G-19
23435-03	23G-20
23436-00	23E-5
23437-00	23E-4
23437-01	23E-4
23438-00	23G-15
23439-00	23E-8
23440-00	23G-16
23444-00	23G-18
23445-00	23A-9
23446-00	23A-3
23446-00	23G-1
23446-03	23G-3
23446-04	23G-2
23446-05	23G-2
23447-00	23A-2
23447-00	23E-1
23447-02	23E-13
23447-03	23E-15
23447-04	23E-16
23447-05	23E-17
23447-06	23E-18
23447-07	23E-19
23447-08	23E-20
23447-09	23E-2
23447-10	23E-3
23447-11	23E-22

Part Number	Fig. and Index
23448-00	23E-14
23449-00	23G-17
23451-00	23E-7
23452-00	38-12
23452-01	38-12
23454-00	23E-6
23456-00	3B-41
23456-01	3B-41
23459-00	8-19
23459-00	8A-35
23459-00	11-47
23459-00	13B-33
23463-02	8a-9
23463-03	8A-19
23463-08	8a-9
23463-09	8A-19
23463-10	11-8
23463-11	11-8
23463-12	11-8
23463-16	8-11
23463-17	8-21
23463-18	8-21
23463-22	11-8
23463-24	8-21
23464-00	31-22
23464-00	31B-29
23464-01	31-22
23464-01	31B-29
23464-02	30C-32
23464-03	30C-32
23465-00	3B-13
23465-01	3B-13
23468-00	31B-51
23468-01	31B-51
23469-00	8A-7
23469-07	8A-7
23469-12	12-32
23469-13	12-32
23469-14	12-32
23474-00	2-35
23474-00	4-18
23475-06	3B-6
23475-07	3B-6
23478-00	31-23
23478-00	31B-28
23478-01	31-23
23478-01	31B-28
23479-06	3A-11
23479-07	3A-11
23489-00	27A-14
23499-00	27B-11
23500-10	27B-5
23500-11	27B-6
23500-12	27B-1
23500-13	27B-3
23500-14	27B-2
23500-15	27B-4
23501-00	27B-14

Part Number	Fig. and Index
23503-00	27-4
23504-00	27-4
23504-00	27A-14
23507-00	27-4
23537-03	24D-49
23542-00	31B-47
23545-00	7A-33
23545-02	43-23
23546-00	42-22
23551-00	3A-3
23551-01	3A-3
23551-04	3A-3
23551-05	3A-3
23552-00	11-90
23558-00	15-22
23558-00	24E-39
23569-00	8-63
23569-00	8A-38
23569-02	8-63
23629-00	9-4
23643-00	5D-54
23643-01	5D-54
23656-02	5D-12
23656-03	5D-12
23656-05	5D-24
23660-06	5D-9
23660-07	5D-9
23662-00	5E-23
23662-00	5F-20
23663-00	5E-21
23663-00	5F-21
23664-02	5E-18
23664-02	5F-23
23665-02	5E-18
23665-02	5F-23
23670-00	45-15
23675-02	5B-10
23675-03	5D-4
23675-04	5D-4
23675-05	5D-3
23675-09	5B-10
23675-09	5C-10
23675-10	5B-13
23675-10	5C-12
23675-11	5B-13
23675-11	5C-12
23675-13	5D-4
23676-00	9-5
23676-03	9-5
23677-00	3A-85
23677-01	3A-85
23680-05	5-21
23680-06	5-21
23680-08	5-22
23680-08	5A-22
23680-09	5B-41
23680-09	5C-39
23681-00	9-6

Part Number	Fig. and Index
23681-05	9-6
23690-04	5D-11
23690-05	5D-11
23707-00	5G-55
23710-00	45-16
23711-00	45-17
23718-00	5G-19a
23718-00	13B-67
23728-00	45-20
23737-00	20A-28
23737-00	29A-30
23737-00	29A-33
23737-00	29A-49
23738-07	29A-27
23740-09	29A-29
23743-04	5D-13
23743-05	5D-13
23748-00	9-1
23750-00	5D-5
23750-01	5D-5
23790-00	9-13
23798-00	24D-66
23799-00	31-15
23799-00	31B-19
23799-01	31-15
23799-01	31B-19
23809-10	24C-23
23812-00	24D-70
23812-00	24E-67
23812-00	31D-85
23844-00	33A-24
23871-00	35-8
23874-00	18A-30
23874-01	18A-30
23875-00	18A-31
23875-01	18A-31
23885-00	11-1
23885-02	11-1
23919-00	17-1
23922-00	8-22
23943-00	33-34
23943-00	33A-11
23954-00	38-48
23969-02	32-44
23969-02	33C-5
23969-04	32-43
23969-04	33C-9
23969-04	33C-10
23970-00	17-9c
23972-00	5D-57
23973-00	17-7a
23982-00	17-5
23982-02	17-6
24019-00	10-36
24019-00	10A-31
24020-00	10-34
24020-00	10A-14
24023-02	38-43

Part Number	Fig. and Index
24024-03	38-44
24025-02	38-45
24026-00	38-41
24041-00	31B-52
24041-01	31B-52
24042-00	10-52
24042-00	10A-30
24047-00	29A-6
24048-00	29A-7
24049-00	29A-47
24054-00	5G-54
24077-00	25A-3
24077-00	25B-3
24081-00	29A-56
24081-00	29A-62
24081-02	29A-56
24091-02	11A-38
24117-00	11-7
24120-04	29A-34
24122-04	29A-31
24123-00	29A-61
24153-00	29A063
24154-00	29A-11
24161-02	29A-15
24164-00	8A-14b
24164-00	11-100
24173-00	8-74
24173-00	8B-8
24173-02	8B-66
24179-00	23A-43
24197-02	42-21
24197-04	42-21
24218-00	10-22
24227-03	53-13
24232-00	45-11
24233-00	42-9
24233-00	45-70
24245-00	12-34
24246-00	12-36
24247-02	12-31
24247-03	12-31
24247-04	12-31
24247-14	12-31
24247-15	12-31
24247-16	12-31
24247-26	12-31
24269-00	27B-10
24279-00	27B-13
24280-00	27B-8
24281-00	27B-8
24282-00	6-12b
24284-00	13C-18
24285-00	13C-18
24298-02	13C-20
24298-03	13C-20
24298-04	13C-20
24299-00	7A-18a
24307-00	13C-21

Part Number	Fig. and Index
24307-02	13C-21
24307-03	13C-21
24308-00	13C-21
24308-02	13C-21
24308-03	13C-21
24311-00	6-38
24323-00	13C-13
24329-00	36-73
24342-00	37-24
24353-02	31-24
24353-03	31-25
24368-02	7A-18a
24368-03	7A-18a
24368-04	7A-18a
24373-00	32A-36
24378-00	7A-28
24378-02	7A-28
24385-00	20B-5
24386-02	27A-20
24386-03	27A-21
24387-00	27A-16
24388-00	27A-18
24389-00	27A-19
24392-00	20B-6
24393-00	20B-7
24395-00	7A-70
24398-00	5D-5
24398-01	5D-5
24399-00	31A-17
24399-03	31A-17
24406-00	31A-40
24407-00	7A-19a
24407-03	7A-19a
24408-00	20B-11
24409-00	20B-11
24410-00	7A-19
24410-00	Misc.
24410-03	7A-19
24410-03	Misc.
24410-04	7A-19
24410-04	Misc.
24410-05	7A-19
24410-05	Misc.
24411-00	7A-18
24411-00	Misc.
24412-00	5D-20
24414-03	5D-24
24416-00	9-4
24418-00	9-12
24419-00	31A-35
24420-02	8-26
24420-03	8-26
24420-04	8-26
24420-08	8-26
24420-10	8B-46
24420-12	8B-46
24420-14	8B-46
24420-16	8B-46

Part Number	Fig. and Index
24420-18	8B-46
24426-00	20B-9
24427-00	20B-10
24428-00	20B-13
24430-00	29B-7
24431-00	29B-8
24432-00	29B-9
24433-00	13C-10
24436-00	6-37
24436-01	6-37
24437-00	5D-35
24440-00	18A-8
24441-00	18A-15
24444-00	18A-1
24444-01	18A-1
24444-06	18A-3
24444-07	18A-3
24444-08	18A-4
24444-09	18A-5
24445-00	18A-33
24445-01	18A-33
24453-00	6-12a
24453-01	6-12a
24455-00	6-12
24474-00	27A-4
24476-00	26C-15
24477-00	20A-29
24480-00	24C-21
24482-00	18A-17
24483-00	18A-2
24483-01	18A-2
24484-00	27B-7
24484-01	27B-7
24488-00	5D-18
24489-00	26C-14
24490-00	8-61
24497-00	26C-8
24498-00	26C-12
24500-00	26C-9
24502-00	26C-5
24509-00	18A-9
24509-00	18A-10
24512-00	27B-9
24513-00	27B-9
24515-00	27B-16
24516-00	27B-17
24517-00	27B-18
24518-00	27B-19
24521-00	18A-19
24530-00	26C-6
24531-00	25A-23
24539-00	15-28
24540-00	5-33
24541-00	25A-11
24541-01	25A-11
24543-00	27A-2
24548-00	24C-35
24549-00	24C-36

Part Number	Fig. and Index
24550-02	8C-7
24550-03	8C-6
24550-04	8C-4
24550-05	8C-3
24551-00	5B-35
24551-01	5B-35
24552-00	9-14
24553-00	5B-36
24553-01	5B-36
24558-00	24D-54
24558-00	24E-66
24558-00	31D-83
24561-00	18A-11
24562-00	18A-13
24563-00	28B-8
24564-00	28B-9
24567-00	11-86
24567-02	11A-6
24568-00	24C-56
24569-00	24C-22
24570-00	24C-24
24571-00	18A-12
24572-00	26C-17
24575-00	40-19
24575-01	40-19
24576-00	40-39
24577-00	28B-1
24579-00	26C-13
24580-00	26C-16
24582-00	24E-61
24584-00	40-25
24585-00	40-36
24587-00	40-20
24588-00	40-59
24590-00	2-33
24590-00	40-1
24590-11	2-33
24590-11	40-1
24592-00	40-26
24596-00	40-61
24597-00	40-27
24598-02	40-28
24598-03	40-29
24599-00	40-30
24602-00	24C-32
24602-02	24C-26
24602-03	24C-25
24603-00	24C-31
24604-00	40-31
24605-00	40-60
24607-00	40-62
24608-00	40-54
24610-00	25A-17
24611-16	25A-4
24611-17	25A-4
24611-18	25A-6
24611-19	25A-6
24611-20	25A-18

PILOTEN-SERVICE
Straubing LBA II-A-170
Telefon (09429) 716

Part Number	Fig. and Index
24611-21	25A-18
24611-43	25A-1
24611-44	25A-5
24611-45	25A-5
24611-46	25A-8
24611-52	25A-24
24613-00	3B-1
24613-01	3B-1
24614-00	4-21
24614-01	4-21
24617-02	12-27j
24617-03	12-27j
24617-04	12-27j
24617-05	12-27j
24617-06	12-27j
24617-07	12-27j
24617-08	12-27j
24617-09	12-27j
24617-18	12-27j
24617-19	12-27j
24622-02	24C-8
24622-05	24A-26
24622-10	24A-26
24622-10	24B-8
24623-00	15B-63
24623-00	15C-61
24623-00	24C-34
24623-00	24E-47
24624-00	32A-40
24624-00	45-74
24624-00	46-6
24625-00	31A-37a
24627-00	33-8
24629-00	36-74
24629-00	36-78
24631-00	36-75
24631-02	36-75
24631-04	36-79
24641-00	32-49
24641-00	45-67
24641-00	46-74
24641-00	46-79
24641-00	46-82
24644-02	14A-17
24647-00	33-44
24650-02	5E-26
24650-03	5E-26
24651-02	5E-27
24651-03	5E-27
24655-02	5E-8
24655-03	5E-7
24657-00	5G-19a
24657-00	13B-67
24657-00	13C-66
24659-00	36-43
24660-00	45-12
24663-00	33-42
24664-00	33-43

Part Number	Fig. and Index
24666-00	38-42
24676-00	6-31
24677-00	19A-25
24678-00	19A-24
24679-00	19A-20
24679-01	19A-20
24679-02	19A-20
24679-03	19A-20
24680-00	19A-16
24680-01	19A-16
24681-00	16-26
24681-00	19A-1
24681-01	16-26
24681-01	19A-1
24681-05	16-26
24681-05	19A-1
24682-00	54-3
24704-00	32A-39
24704-00	45-5
24705-00	8-41
24705-02	8-41
24705-05	8B-13
24712-00	45-22
24712-02	7B-55
24712-02	43-7
24712-02	43-8
24712-02	46-11
24712-02	46A-36
24719-00	31C-58
24720-00	13C-12
24720-01	13C-12
24721-00	5-2
24721-00	6-1
24722-00	5-1
24723-00	2-20
24723-00	3A-1
24723-01	2-20
24723-01	3A-1
24723-02	2-20
24723-02	3A-1
24723-03	2-20
24723-03	3A-1
24724-00	23-2
24724-00	23D-1
24724-02	23-2
24725-00	23-3
24725-00	23F-1
24733-00	3A-113
24734-00	3A-114
24735-00	4-22
24736-00	4-23
24737-00	13C-15
24738-02	8-65
24738-03	8-65
24738-04	8-65
24739-00	8-67
24740-00	8-68
24740-00	8B-4

Part Number	Fig. and Index
24741-03	8-66
24741-03	8-66
24741-04	8-66
24741-05	8B-40
24742-00	17A-2
24747-00	3A-13
24747-01	3A-13
24748-00	3A-20
24748-01	3A-20
24753-02	8-64
24753-03	8-64
24753-04	8-64
24754-00	24C-54
24755-00	5B-37
24755-01	5B-37
24763-00	17A-10
24766-00	33C-11
24768-00	24A-21
24770-04	27C-2
24770-06	27C-1
24770-08	27C-3
24771-00	2-70
24771-01	2-70
24773-00	16-31
24775-00	19A-62
24778-00	17A-8
24779-00	17A-9
24780-00	17A-11
24781-00	17A-7
24783-00	2-83
24783-01	2-83
24787-02	27C-12
24787-03	27C-12
24788-00	24F-20
24788-00	27C-13
24791-00	27C-14
24792-00	5-7
24793-02	27C-18
24793-03	27C-18
24799-02	45-59
24799-03	45-60
24801-00	45-61
24802-00	45-62
24804-00	45-63
24805-00	45-64
24807-00	45-65
24808-00	45-3
24809-00	19A-16
24809-01	19A-16
24810-00	16-26
24810-00	19A-1
24810-01	19A-1
24810-02	16-26
24810-02	19A-1
24810-03	16-26
24810-03	19A-1
24812-00	9-16
24813-00	38-47

Part Number	Fig. and Index
24815-00	24A-1
24817-00	9-7
24819-00	16-72
24819-00	18A-7
24819-01	16-72
24819-01	18A-7
24820-00	27C-17
24822-02	8C-1
24822-03	8C-2
24823-00	5G-33
24823-02	5G-34
24824-00	25-30a
24825-00	25-28
24825-02	25-30
24827-00	12-8
24830-00	17A-6
24831-00	5-20
24831-00	5E-1
24831-02	5E-41
24831-03	5E-41
24842-00	16-72
24842-00	18-6
24842-01	16-72
24842-01	18-6
24843-02	8-60
24843-04	8B-47
24843-06	8B-47
24843-08	8B-47
24843-10	8B-47
24843-12	8B-47
24843-14	8B-47
24845-00	8-8
24846-00	23D-18
24861-00	27C-5
24862-00	24F-3
24862-00	27C-6
24862-01	24F-4
24862-01	27C-5
24867-00	8-31
24870-00	2-30
24870-01	2-30
24871-00	11-9
24872-00	54-4
24873-00	24C-55
24875-00	38-42
24880-00	8-8
24882-00	12-28
24882-09	12-28
24884-00	28-2
24885-00	28-1
24887-02	7A-18
24887-03	7A-13
24887-03	24E-64
24891-04	31C-27
24891-05	31C-28
24892-00	31C-29
24893-02	8-2
24894-12	29A-50

Part Number	Fig. and Index
24894-13	29A-51
24894-14	29A-52
24894-15	29A-53
24894-16	29A-54
24895-02	25-13
24895-03	25-33
24895-04	25-32
24895-17	25-13
24895-18	25-33
24896-00	23F-4
24897-06	8-30
24897-07	8-30
24898-06	8-30
24898-07	8-30
24902-00	7A-28
24902-02	7A-28
24907-00	7A-72
24911-00	16-32
24912-00	16-36a
24912-00	32A-27
24912-01	16-36a
24912-01	32A-27
24913-00	31C-40
24915-00	16-32b
24916-00	16A-45
24916-00	32-9
24918-00	16-78
24920-00	31C-59
24920-00	31D-81
24932-00	39-14
24932-00	40-9
24933-00	39-14a
24933-00	40-9a
24934-00	7A-19b
24935-00	8-71
24935-00	8B-34
24936-00	7A-19c
24937-02	12-29
24937-03	12-29
24938-00	31A-37b
24939-00	7A-19d
24940-00	7A-19e
24941-00	7A-76
24947-00	12-19
24947-01	12-19
24947-02	12-19
24947-03	12-19
24947-04	12-21
24947-05	12-21
24947-06	12-21
24947-07	12-21
24948-00	17-30a
24948-00	39-10
24948-00	40-5
24952-00	12-38
24953-00	8-21
24953-01	8-21
24953-02	8-21
24953-05	8-21
24953-06	8-21
24953-07	8-21
24953-08	8-21
24953-09	8-21
24955-00	7A-84
24955-00	7B-81
24960-00	13B-56a
24960-00	7A-19f
24961-00	33-42a
24961-00	37-15a
24962-00	33-42b
24962-00	37-15b
24967-00	8-73
24967-01	8-73
24967-05	8-73
24967-08	8-73
24967-10	8-73
24967-13	8-73
24967-18	8-73
24967-19	8-73
24969-00	37-15c
24970-00	24D-63a
24970-00	30C-38
24971-00	30B-59a
24971-00	31C-53
24971-00	31D-34
24972-00	7A-28a
24973-00	7A-28b
24974-00	7A-28c
24975-00	7A-28d
24976-00	7A-28e
24977-00	7A-28g
24978-00	7A-28f
24979-00	7A-27a
24980-00	7A-27b
24981-00	24D-63b
24981-00	30B-59b
24981-00	30C-39
24981-00	31A-37c
24981-00	31C-54
24981-00	31D-33
24982-00	13B-56a
24983-00	13B-56c
24984-00	8-70
24984-00	8B-33
24985-00	24D-73
24985-00	24E-65
24991-00	42-22
24993-03	7A-19
24994-00	8-70
24996-02	27B-21
24996-03	27B-21
24996-04	27B-22
24996-05	27B-22
24999-00	7A-35
24999-03	7A-35
24999-05	7A-35
25003-03	7A-19a
25006-00	31C-74
25007-00	24A-23
25008-00	42-15
25008-00	45-76
25010-00	25A-2
25010-03	25B-2
25011-00	12-28
25011-02	12-28
25011-03	12-28
25011-04	12-28
25012-00	12-29
25012-02	12-29
25012-03	12-29
25012-04	12-29
25013-00	27A-16
25017-00	27-13
25019-00	26A-13
25020-00	29B-30
25020-00	31A-92
25020-00	32-15
25020-02	29B-30
25020-03	31A-89
25020-05	32-15
25022-02	7A-18
25022-02	Misc.
25022-03	7A-18
25022-03	Misc.
25022-04	7A-18
25022-04	Misc.
25023-00	16A-49
25025-00	16A-50
25037-00	45-5
25039-00	31A-57
25046-00	16-32
25048-00	38-35
25048-02	38-35
25069-00	29B-31
25069-04	29A-64
25079-00	29B-32
25116-00	31A-73
25117-00	31A-74
25118-00	31A-75
25119-00	8-70
25136-00	7A-15
25137-00	17-9
25139-02	23D-15
25144-00	7A-70
25144-00	24E-57
25156-02	8-45a
25156-04	8-45
25156-06	8B-37
25156-18	8B-36
25156-20	8B-36
25156-22	8B-37
25156-24	8B-37
25156-26	8B-37
25156-28	8B-37
25156-30	8B-37
25203-00	32-60
25220-00	15-32
25222-00	42-12
25222-00	48-4
25222-02	45-54
25222-02	48-4
25223-02	12A-11
25223-03	12A-11
25223-04	12A-11
25223-12	12A-11
25223-15	12A-11
25223-18	12A-11
25223-21	12A-11
25223-24	12A-11
25223-25	12A-11
25223-48	12A-11
25225-00	7A-19a
25226-00	7A-19
25227-00	7A-35
25227-03	7A-35
25229-00	42-11
25229-00	45-55
25229-00	48-2
25242-02	12A-21
25243-02	5F-57
25243-03	5F-56
25243-04	5F-56
25244-00	5F-58
25252-00	31B-39a
25254-02	8B-38
25257-00	17-20
25259-00	31A-79
25260-00	24F-5
25260-00	27C-20
25261-02	24F-18
25261-02	27C-21
25261-03	24F-19
25261-03	27C-22
25266-00	31A-80
25269-00	24A-37
25269-00	24F-1
25273-00	31A-81
25274-01	5F-43
25281-00	8B-42
25281-00	11-102
25281-02	8B-42
25281-02	11-102
25281-03	8B-42
25281-03	11-102
25283-00	8B-41
25283-00	11-101
25285-00	12A-23
25285-00	12A-39
25286-00	5F-6
25286-01	5F-6
25290-00	15-30
25292-02	5F-42

Part Number	Fig. and Index
25292-03	5F-42
25292-04	5F-60
25292-05	5F-60
25294-00	7A-28a
25296-00	8-75
25297-00	8-75
25299-00	5F-49
25299-01	5F-49
25300-04	5F-70
25300-06	5F-64
25305-00	32C-13
25306-02	5F-44
25306-03	5F-44
25306-04	5C-25
25306-05	5C-25
25306-07	5C-13
25306-08	5F-59
25306-09	5F-59
25308-00	6-13a
25310-00	6-13
25310-14	6-13
25312-00	32C-12
25313-00	5F-41
25313-01	5F-41
25314-03	5C-27
25315-00	5F-45a
25315-04	5F-45a
25316-00	5F-40
25316-01	5F-40
25318-02	5F-24
25318-03	5F-24
25318-04	5F-25
25318-05	5F-25
25319-00	5F-26
23520-02	5F-8
25320-03	5F-8
25320-04	5F-7
25320-05	5F-27
25320-06	5F-9
25320-08	5F-7
25320-09	5F-7
25320-10	5F-8
25321-00	5C-42
25321-01	5C-42
25323-02	5C-26
25323-03	5C-26
25325-00	32C-2
25328-00	5F-50
25328-01	5F-50
25329-00	32C-8
25330-00	10A-47
25332-00	5C-43
25332-01	5C-43
25333-00	5A-21
25333-00	5F-1
25333-02	5F-32
25333-03	5F-32
25333-04	5F-30

Part Number	Fig. and Index
25333-05	5F-30
25333-12	5F-33
25333-14	5A-21
25333-14	5F-1
25333-17	5A-21
25333-17	5F-1
25334-00	5C-8
25335-00	8-70
25338-00	32C-1
25341-02	5C-28
25341-03	5C-28
25341-04	5C-29
25341-05	5C-29
25343-00	6-40
25343-01	6-40
25344-00	5C-24
25344-01	5C-8
25345-00	5G-49
25350-00	6-37
25350-01	6-37
25353-00	5F-61
25353-01	5F-61
25354-00	5F-52
25354-01	5F-53
25355-00	5A-3
25355-00	5C-1
25355-03	5A-5
25355-04	5C-38
25355-06	5A-6
25355-07	5C-37
25355-08	5A-3
25355-08	5C-1
25357-00	5F-51
25360-00	5G-33
25360-02	5G-34
25363-00	31C-89
25365-00	8B-2
25366-00	6-25
25371-00	33-45
25373-02	9-18
25373-03	9-19
25374-02	5F-66
25375-00	5F-67
25376-00	13C-10
25378-00	9-20
25379-00	9-8b
25379-00	9-9b
25380-00	9-8c
25380-00	9-9c
25382-00	5A-8
25382-02	5A-16
25382-05	5A-14
25382-07	5A-16
25383-02	5A-13
25383-05	5A-15
25383-06	5A-9
25383-07	5A-9
25383-12	5D-27

Part Number	Fig. and Index
25383-12	5F-54
25383-13	5D-27
25383-13	5F-54
25385-00	5A-2
25385-00	6-1
25385-02	6-9
25389-00	11A-37
25391-00	6-33
25392-02	15A-2
25392-02	15B-2
25392-02	15C-2
25392-03	15A-3
25392-03	15B-3
25392-03	15C-3
25392-04	15A-4
25392-04	15B-4
25392-04	15C-4
25393-00	15A-5
25393-00	15B-5
25394-00	15A-6
25394-00	15B-6
25394-00	15C-6
25394-00	15A-7
25395-00	15B-7
25395-00	15C-7
25396-00	15A-8
25396-00	15B-8
25396-00	15C-8
25397-00	15A-9
25397-00	15B-9
25397-00	15C-9
25403-00	9-17
25409-00	3B-4
25409-01	3B-4
25412-02	8C-4
25412-03	8C-7
25412-04	8C-3
25412-05	8C-6
25414-02	10A-26
25414-03	10A-26
25414-04	10A-27
25414-05	10A-27
25415-02	10A-28
25415-03	10A-28
25415-04	10A-29
25415-05	10A-29
25416-00	10A-21
25417-00	10A-22
25418-00	10A-23
25419-00	8B-1
25421-00	45-79
25422-00	45-51
25425-00	11A-7
25427-04	8B-29
25427-16	8B-28
25428-00	11A-8
25429-00	11A-9
25432-00	11A-10

Part Number	Fig. and Index
25437-00	11A-11
25438-00	11A-12
25442-00	32C-23
25444-00	11A-13
25446-00	33C-1
25447-00	11A-14
25448-00	11A-15
25449-00	16-57
25452-00	13C-47
25453-00	12A-45
25454-00	12A-44
25456-00	11A-16
25457-00	11A-17
25459-00	11A-39
25460-00	11A-18
25461-00	5A-1
25471-02	5A-7
25461-03	5A-24
25461-04	5A-23
25461-05	5A-23
25461-06	5A-25
25471-09	5A-7
25463-00	10A-43
25464-00	11A-19
25467-00	12A-7
25472-00	8B-50
25473-00	11A-20
25475-00	8B-14
25476-00	8B-16
25477-03	8B-31
25478-02	8B-44
25478-06	8B-44
25478-10	8B-44
25478-14	8B-44
25478-22	8B-44
25478-37	8B-44
25478-38	8B-44
25478-39	8B-44
25478-40	8B-44
25478-41	8B-44
25478-07	8B-44
25479-02	8B-45
25479-04	8B-45
25479-06	8B-45
25479-08	8B-45
25479-10	8B-45
25479-17	8B-45
25481-02	8B-48
25481-03	11-8
25481-04	8B-48
25481-05	11-8
25481-06	8B-48
25481-07	11-8
25481-08	8B-48
25481-09	11-8
25481-09	11-8
25481-20	8B-48
25481-23	11-8

Part Number	Fig. and Index
25481-24	8B-48
25481-27	11-8
25481-28	8B-48
25481-31	11-8
25481-32	8B-48
25481-35	11-8
25481-36	8B-48
25481-39	11-8
25481-40	8B-48
25482-02	12A-43
25482-03	12A-43
25482-04	12A-43
25482-05	12A-43
25482-10	12A-43
25482-12	12A-43
25482-14	12A-43
25482-16	12A-43
25482-18	12A-43
25482-20	12A-43
25483-02	8B-43
25483-03	8B-43
25483-04	8B-43
25483-05	8B-43
25483-14	8B-43
25483-17	8B-43
25489-00	11A-5
25496-02	10A-12
25496-03	10A-12
25496-04	10A-15
25497-02	10A-13
25497-03	10A-13
25497-04	10A-16
25498-00	8B-23
25503-10	12A-37
25506-00	11A-2
25508-00	11A-3
25509-00	11A-1
25510-00	11-9
25515-02	12A-12
25515-03	12A-12
25515-04	12A-12
25515-05	12A-12
25515-08	12A-14
25515-09	12A-14
25515-10	12A-14
25515-11	12A-14
25515-14	12A-13
25515-15	12A-13
25519-02	12A-26
25519-03	12A-26
25519-04	12A-26
25519-05	12A-26
25519-06	12A-26
25519-15	12A-26
25519-18	12A-26
25519-19	12A-26
25521-00	8B-21
25524-02	11-1

Part Number	Fig. and Index
25533-00	8B-20
25533-00	8B-25
25534-02	12A-47
25534-03	12A-47
25534-18	12A-47
25535-02	12A-46
25535-03	12A-46
25535-23	12A-46
25543-00	9-9
25544-02	9-8
25549-04	7A-19a
25549-05	7A-19
25550-02	12A-28
25550-03	12A-28
25550-04	12A-28
25550-05	12A-28
25550-08	12A-30
25550-09	12A-30
25550-10	12A-30
25550-11	12A-30
25550-14	12A-29
25550-15	12A-29
25550-16	12A-29
25550-17	12A-29
25551-02	31D-16
25552-00	12A-8
25552-03	12A-49
25554-00	6-41
25555-02	7A-18a
25555-03	7A-18
25555-03	24E-64
25555-04	7A-18a
25555-05	7A-18
25555-06	7A-18a
25555-07	7A-18
25555-07	24E-64
25555-08	7A-18
25556-00	25-22b
25558-04	7A-19a
25558-05	7A-19
25559-04	7A-19a
25559-05	7A-19
25560-02	7A-19
25560-02	Misc.
25560-03	7A-19
25560-03	Misc.
25560-04	7A-19
25560-04	Misc.
25561-02	7A-18
25561-02	Misc.
25561-03	7A-18
25561-03	Misc.
25561-04	7A-18
25561-04	Misc.
25562-00	32C-14
25564-00	6-41
25567-00	8B-53
25568-02	15B-31

Part Number	Fig. and Index
25568-03	15B-32
25568-04	15B-33
25568-05	15B-34
25568-06	15B-35
25568-08	15B-29
25568-08	15C-29
25568-10	15B-67
25568-11	15B-68
25568-12	15B-69
25568-12	15C-32
25568-13	15B-70
25568-14	15B-66
25568-15	15C-33
25568-16	15C-34
25568-17	15C-35
25568-18	15C-30
25568-19	15C-37
25568-20	15C-38
25568-21	15C-36
25571-00	13C-15
25572-00	13C-14
25573-00	13C-13
25574-00	13C-21
25578-00	5F-55
25580-00	13C-21
25589-00	7A-1
25589-02	5G-16
25590-00	11-103
25590-00	11A-36
25593-00	8B-39
25595-00	11A-35
25595-00	11A-43
25596-00	32-59
25596-00	45-3
25596-00	46-22
25598-00	12A-4
25598-02	12A-4
25598-03	12A-4
25598-04	12A-4
25598-05	12A-4
25598-06	12A-4
25598-07	12A-4
25598-08	12A-4
25598-17	12A-4
25598-18	12A-4
25598-21	12A-4
25598-22	12A-4
25598-25	12A-4
25598-26	12A-4
25599-00	46-5
25599-00	46A-48
25603-00	15A-41
25603-00	15B-10
25603-00	15C-10
25604-00	9-22
25605-00	9-21
25623-00	5G-42
25623-01	5G-42

Part Number	Fig. and Index
25632-00	33C-6
25654-03	31-7b
25654-05	30C-9b
25655-00	30C-9a
25655-00	31-7a
25656-05	30C-7
25657-00	5F-69
25666-00	19A-52
25669-00	7A-1
25669-02	5G-16
25671-00	5G-50
25671-00	46-8
25673-00	43-1
25675-00	5D-55
25677-00	46-7
25684-00	7A-83
25687-00	46-3
25687-00	46A-47
25689-02	46A-27
25692-00	9-23
25695-00	8B-67
25696-02	8B-69
25696-03	8B-68
25697-00	15B-5
25697-00	15C-5
25704-00	3A-61
25704-00	3A-63
25705-00	15-38
25705-00	46-63
25705-00	46-75
25705-00	46A-39
25706-00	46-20
25707-00	46-21
25711-00	15-4
25713-00	7A-35
25715-00	46-4
25716-00	43-12
25716-00	46-24
25719-00	17-26d
25720-00	17-26
25720-02	17-26b
25720-03	17-27a
25720-04	39-17
25740-00	9-25
25741-00	9-26
25742-00	9-24
25743-00	43-11
25743-00	46-23
25762-00	33A-26
25763-00	33A-26
25763-01	33A-26
25781-00	11A-32
25782-00	11A-6
25788-03	6-42
25801-02	12A-1
25801-03	12A-1
25801-04	12A-1
25801-05	12A-2

Part Number	Fig. and Index
25801-06	12A-2
25801-07	12A-2
25801-08	12A-2a
25801-10	12A-2a
25801-11	12A-2a
25821-00	5C-39
25829-01	5C-43
25832-00	5C-8
25832-01	5C-8
25839-00	32-46
25842-00	5C-4
25843-02	5C-28
25843-03	5C-28
25846-00	46-70
25854-00	33-47
25854-02	33A-10
25855-00	32-17
25862-00	33-49
25867-02	4-12
25867-03	4-12
25867-04	4-12
25867-05	4-12
25867-06	4-12
25867-07	4-12
25876-00	5D-6
25876-01	5D-6
25880-00	5A-34
25951-00	15B-25
25951-00	15C-25
25960-02	43-9
25960-02	46-28
25960-02	46A-33
25960-03	46-29
25960-03	46A-34
25977-03	5D-3
25983-00	31-1
25985-00	31A-90
25994-00	24A-43
25995-00	25-29
25996-00	25-28
26049-02	36-35
26088-03	51-1
26088-06	51-1
26088-07	51-1
26088-08	51-1
26088-09	51-1
26088-12	51-1
26088-13	51-1
26099-00	5C-43
26100-00	43-25
26100-00	46-68
26100-00	46A-61
26103-00	5F-28a
26119-00	9-19
26130-04	9-27
26130-05	9-27
26130-06	9-27
26130-07	9-27
26130-08	9-27
26130-09	9-27
26131-00	6-39
26135-00	32C-24
26147-00	9-20
26156-00	51-14
26161-00	5G-57
26189-13	8B-30
26189-14	8B-28
26192-00	18A-8
26196-00	18A-29
26196-01	18A-29
26198-00	18A-32
26208-00	18A-1
26208-01	18A-1
26222-00	24B-22
26238-00	26B-4
26240-00	32C-1
26246-00	31-6
26248-06	31-5
26249-03	31-2
26249-07	31-2
26251-02	25B-4
26251-03	25B-4
26251-04	25B-9
26251-05	25B-12
26251-06	25B-26
26251-07	25B-26
26259-00	5A-2
26259-00	6-1
26259-03	6-9
26264-00	25B-1
26266-04	25B-8
26266-05	25B-11
26270-00	35-19
26272-00	7A-44
26273-00	7A-37
26276-00	25B-16
26278-00	18A-34
26279-00	18A-33
26280-00	18A-15
26313-00	24B-6
26319-00	8B-2
26320-00	7A-35
26326-00	24B-5
26330-00	8B-12
26335-02	37-15
26335-03	37-15
26335-04	37-15
26335-05	37-15
26340-00	5A-18
26342-00	24E-10
26343-00	3B-44
26343-00	39-30
26345-05	24E-48
26345-05	24F-2
26345-05	27C-4
26345-06	24E-48
26347-00	Misc.
26348-00	Misc.
26354-00	5D-5
26354-01	5D-5
26356-00	33A-15
26360-00	5A-8
26360-02	5A-16
26360-03	5A-16
26360-05	5A-14
26360-07	5A-8
26362-09	7B-10
26362-10	7B-10
26372-00	8B-10
26372-01	8B-10
26374-00	8B-18
26374-01	8B-24
26377-00	29A-16
26380-00	29A-17
26381-01	28A-12
26383-00	5G-14
26385-00	24D-50
26385-00	27A-13
26386-00	33A-25
26387-00	5G-13
26398-07	7B-1
26398-08	7B-1
26398-09	7B-1
26398-10	7B-1
26398-11	7B-1
26398-22	7B-1
26398-23	7B-1
26398-24	7B-1
26398-25	7B-1
26398-26	7B-1
26398-27	7B-1
26398-28	7B-1
26398-29	7B-1
26398-30	7B-1
26398-31	7B-1
26418-00	7B-31
26418-02	7B-31
26421-03	29A-14
26422-00	7B-31
26423-00	7B-31
26427-00	5G-51
26429-02	7B-2
26429-03	7B-2
26429-04	7B-2
26432-00	13C-15
26439-00	29A-56
26441-02	8B-40
26441-03	8B-40
26441-04	8B-40
26441-05	8B-40
26445-00	5G-52
26447-00	29A-57
26448-00	13C-13
26453-05	12A-21
26453-05	12B-8
26460-00	5A-1
26460-02	5A-1
26468-00	5A-18
26468-03	5A-19
26468-04	5A-18
26468-05	5A-19
26469-06	7B-11
26473-00	5D-17
26477-00	26B-8
26478-00	26B-11
26479-03	7B-18
26480-00	5D-24
26486-00	5G-33
26486-02	5G-34
26487-00	5G-47
26489-00	29A-18
26491-00	29A-19
26494-02	5G-53
26494-03	5G-53
26495-00	26B-17
26496-02	5G-16
26497-16	26B-12
26498-00	5A-19a
26498-01	5A-19a
26501-00	29A-12
26501-01	29A-12
26503-02	9-31
26503-03	9-31
26503-04	9-31
26503-05	9-31
26504-00	5G-17a
26506-03	9-30
26506-04	9-30
26506-05	9-30
26506-06	9-30
26507-00	5G-17b
26511-02	7B-3
26511-03	7B-3
26511-04	7B-3
26512-00	26B-7
26514-00	5D-58
26520-00	9-32
26522-00	17-39
26523-02	7B-4
26523-03	7B-4
26523-04	7B-4
26523-05	7B-4
26523-06	7B-4
26524-02	15C-65
26524-03	15C-65
26524-04	15C-65
26525-00	37-25
26527-00	7B-33
26529-00	17-41
26530-00	37-22
26532-02	8B-38
26532-03	8B-38

Part Number	Fig. and Index
26532-04	8B-38
26532-05	8B-38
26535-02	15C-66
26535-03	15C-66
26535-04	15C-66
26538-05	12A-29
26538-06	12A-29
26538-07	12A-29
26538-08	12A-29
26538-21	12A-13
26538-21	12B-2
26538-22	12A-13
26538-22	12B-2
26540-00	37-23
26541-00	8B-14
26542-00	17-38
26544-00	26B-10
26548-02	8B-60
26548-02	54-3
26548-04	54-3
26549-00	7B-60
26555-00	8B-61
26556-00	29A-34
26561-00	29A-60
26564-00	46-63
26567-00	26B-2
26569-00	13C-17
26574-02	12A-14
26574-03	12A-14
26574-04	12A-14
26574-05	12A-14
26577-00	7B-53
26578-00	5D-56
26581-00	37-20
26584-02	12A-46
26584-03	12A-46
26591-02	12A-47
26591-03	12A-47
26600-00	29A-3
26609-02	12A-30
26609-03	12A-30
26609-04	12A-30
26609-05	12A-30
26612-02	29A-2
26612-03	29A-2
26612-04	29A-2
26613-00	13C-21
26613-02	13C-21
26614-00	5F-6
26616-00	8B-58
26617-00	12A-12
26617-01	12A-12
26617-02	12A-12
26617-03	12A-12
26617-04	12B-1
26617-05	12B-1
26617-06	12B-1
26617-07	12B-1

Part Number	Fig. and Index
26618-00	12A-28
26618-01	12A-28
26618-02	12A-28
26618-03	12A-28
26619-00	24B-1
26622-00	5D-55
26627-00	13C-79
26629-02	8B-59
26630-00	13C-21
26630-02	13C-21
26637-02	8B-13
26637-03	8B-13
26637-04	8B-13
26637-05	8B-13
26639-00	26B-9
26645-00	5F-69
26646-00	5F-69
26647-00	32A-40
26647-00	46-6
26647-00	46A-49
26648-00	46-7
26649-00	46-4
26650-00	26B-3
26653-00	12B-16
26656-00	8B-20
26656-00	8B-25
26659-00	8B-12
26662-02	8B-46
26662-03	8B-46
26662-04	8B-46
26662-05	8B-46
26665-02	34-1
26668-02	10A-23
26668-03	10A-23
26675-12	8B-23
26676-04	8B-2
26676-05	8B-2
26677-02	11-50
26677-03	11-50
26679-00	11-9
26683-00	5G-9
26683-02	5G-9
26687-02	11-1
26692-03	7B-6
26692-05	7B-6
26692-07	7B-6
26692-09	7B-6
26692-11	7B-6
26694-00	8B-31
26707-02	37-16
26710-06	10A-21
26710-07	10A-21
26718-02	10A-22
26718-03	10A-22
26724-02	11A-1
26744-02	13C-49
26753-00	7B-61
26756-02	8B-35

Part Number	Fig. and Index
26756-03	8B-35
26758-00	11A-3
26760-00	30C-43
26760-00	31-27
26760-01	30C-43
26760-01	31-27
26761-00	43-1
26762-00	43-29
26768-00	8B-57
26771-00	8B-1
26773-02	8B-64
26773-03	8B-65
26774-00	33A-20
26779-00	7B-12
26781-00	11-88
26789-00	43-28
26791-00	46-76
26791-00	46A-52
26795-00	33A-23
26797-00	32-26
26800-00	13C-78
26803-00	8B-16
26805-04	30C-3
26806-00	32-54
26807-00	16A-26
26809-00	29A-1
26810-00	5G-19
26813-00	5G-18
26813-03	5G-18
26817-00	25B-22
26817-01	25B-22
26820-02	7B-5
26820-03	7B-7
26820-06	7B-5
26820-07	7B-7
26820-10	7B-5
26820-11	7B-7
26820-14	7B-5
26820-15	7B-7
26820-18	7B-5
26820-19	7B-7
26822-00	7B-35
26828-00	29A-36
26829-00	27D-1
26830-00	27D-2
26835-00	24B-33
26837-00	25B-19
26838-00	46-84
26843-00	24B-10
26845-02	25B-7
26845-03	25B-6
26846-00	24B-32
26849-00	25B-5
26849-04	25B-5
26853-00	27D-5
26855-00	7B-34
26855-00	13C-73
26860-00	5D-37

Part Number	Fig. and Index
26860-01	5D-37
26863-00	26B-13
26869-00	24B-31
26870-00	7B-50
26874-00	24B-30
26881-00	29A-48
26882-00	46-53
26882-02	46A-8
26896-00	15-30
26900-00	15-32
26901-00	27D-9
26902-00	29A-59
26912-00	29A-58
26916-00	8B-33
26925-00	24B-28
26926-00	24B-29
26928-00	24B-27
26934-00	32-61
26934-00	46-36
26934-00	46A-54
26952-00	12B-18
26953-00	12B-20
26961-00	12B-21
26965-00	12B-19
26970-02	12B-3
26970-03	12B-3
26970-04	12B-3
26970-05	12B-3
26973-00	24B-23
26980-00	24B-24
26981-00	24B-25
26982-00	24B-21
26988-00	7B-17
26988-02	7B-17
26990-00	27D-6
26992-00	7B-28
27001-00	5C-32
27002-00	5C-30
27002-01	5C-30
27003-00	5C-31
27003-01	5C-31
27004-00	Misc.
27005-00	5C-33
27005-01	5C-33
27018-00	12B-15
27023-00	15-40
27030-02	7B-10
27030-03	7B-10
27032-00	6-43
27032-00	33D-9
27035-02	7B-6
27035-03	7B-6
27035-04	7B-6
27035-05	7B-6
27035-06	7B-6
27046-03	33D-4
27046-04	33D-4
27049-00	7B-32

Part Number	Fig. and Index
27049-02	7B-32
27050-00	20B-8
27053-00	19A-2
27053-01	19A-2
27053-04	19-2
27053-04	19A-2
27053-05	19-2
27053-05	19A-2
27055-00	16-28
27056-00	16-29
27056-01	16-29
27058-00	5G-58
27059-00	23B-23
27059-00	23B-31
27063-00	7B-36
27065-00	4-28
27070-00	31D-71
27072-03	10A-35
27078-00	25B-8
27078-01	25B-11
27084-00	25B-1
27084-03	25B-1
27086-00	25B-16
27086-04	25B-16
27087-00	25B-21
27112-00	23A-44
27129-02	32A-39
27138-00	15-10
27139-00	29A-70
27140-02	29A-71
27140-03	29A-71
27140-04	29A-71
27141-00	29A-72
27142-00	16-26
27142-00	19A-1
27143-00	16-26
27143-00	19A-1
27144-00	16-26
27144-00	19A-1
27145-00	25B-20
27145-01	25B-20
27146-00	26B-20
27148-00	29A-57
27149-00	7B-16
27178-00	7B-82
27180-00	25B-19
27193-00	13C-47
27193-01	13C-47
27208-00	24G-34
27209-00	24G-91d
27214-00	46A-59
27217-00	24G-102
27221-00	30C-10
27221-00	31-1
27221-00	31B-23
27222-00	7A-85
27223-00	24D-77
27223-00	24E-72

Part Number	Fig. and Index
27223-00	24G-13
27223-00	31D-89
27224-00	24D-75
27224-00	24E-73
27224-00	24G-18
27224-00	31D-90
27229-00	20A-77
27235-00	27D-3
27241-00	8-70
27241-00	8B-33
27244-00	12B-22
27245-00	12B-22
27245-00	12B-23
27247-02	2-9
27247-02	2B-1
27247-03	2-9
27247-03	2B-1
27247-06	2B-18
27247-07	2B-16
27252-00	12A-52
27257-00	19-63
27257-00	19A-60
27258-00	19-64
27258-00	19A-61
27260-02	19-5b
27260-02	19A-7
27275-00	5G-19
27276-00	5G-18
27277-04	5G-16
27283-00	5G-59
27288-00	7B-10
27401-00	7A-19j
27402-00	7A-19k
27723-00	26B-9
29997-02	24B-11
29997-03	31D-14
29998-02	13C-77
29998-02	27D-7
29998-03	13C-76
29999-02	17-40
29999-10	8B-71
29999-11	8B-72
30176-03	38-1
30279-00	42-25
30279-00	44-16
30279-00	45-21
30309-00	51-9
30310-00	51-1
30321-00	23A-12
30321-01	23A-12
30325-00	23A-11
30325-01	23A-11
30353-13	7A-5
30353-13	Misc.
30353-17	7B-13
30353-17	Misc.
30353-19	7B-13
30355-00	10A-45

Part Number	Fig. and Index
30405-01	5F-65
30953-00	51-2
30955-00	51-3
30957-00	13A-12
30957-00	13B-38
30960-02	51-1
30960-03	51-1
30960-04	51-1
30960-05	51-1
30960-06	51-1
30960-07	51-1
30960-08	51-1
30960-09	51-1
30960-10	51-1
30960-11	51-1
30960-12	51-1
30960-13	51-1
30960-14	51-1
30960-15	51-1
30960-16	51-1
31045-00	42-24
31045-01	42-24
31101-00	7A-71
31186-03	12-37
31186-04	12-37
31186-05	12-37
31186-11	12-37
31186-13	12-37
31186-14	12-37
31186-15	12-37
31186-16	12-37
31192-00	8A-31
31192-02	11-86
31193-03	11-86
31207-00	24E-60
31207-02	24D-47a
31322-07	16-21
31339-02	26B-6
31360-02	26B-5
31391-00	8B-63
31391-00	24E-17
31429-00	13C-16
31489-00	8-9
31489-00	8-34
31494-00	32-45
31506-02	33-5
31506-02	33A-26
31506-02	33D-17
31506-02	43-2
31506-02	46-9
31506-02	46A-53
31506-02	54-5
31506-03	33-5
31506-04	33-5
31506-05	33A-26
31506-05	33D-18
31506-06	33A-26
31506-07	33D-19

Part Number	Fig. and Index
31537-00	6-34
31614-00	53-4
31617-00	45-77
31671-00	42-17
31685-00	12-20
31685-02	12-20
31747-00	17A-1
31747-00	24E-51
31747-00	29-22
31747-00	29A-65
31766-00	19A-11
21786-03	16A-12
31890-03	45-63
31893-02	32-46
31893-02	45-65
31921-00	6-29
31978-11	15A-26
31978-11	15B-28
31978-11	15C-28
31978-12	15A-27
31978-13	15A-28
31978-14	15A-29
31978-15	15A-30
31978-15	15B-30
31978-15	15B-73
31978-15	15C-31
31978-16	15A-31
31978-17	15A-32
31978-18	15A-33
31978-19	15A-34
32005-03	45-64
32005-03	46-30
32005-03	46A-29
32006-03	45-63
32007-07	46-31
32007-07	46A-30
32008-03	45-65
32008-03	46-77
32203-02	43-10
32203-04	46-34
32003-04	46A-62
32203-06	46-35
32203-06	46A-32
32205-00	46-2
32207-04	46-42
32210-02	46-32
32210-06	46-32
32210-06	46A-26
32212-02	46-33
32212-02	46A-31
32213-00	46-80
32281-03	7-15
32281-03	7A-49
32281-03	7B-14
32281-04	7-15
32281-04	7A-49
32281-04	7B-14
32343-00	24B-26

Part Number	Fig. and Index
32370-02	33A-1
32370-03	33A-8
32370-04	33A-2
32370-05	33A-3
32370-09	33A-7
32370-09	33A-9
32370-12	46-16
32370-13	46A-45
32370-14	33A-4
32370-15	33A-8
32370-15	33D-15
32370-16	33A-7
32370-16	33D-6
32380-00	12A-23
32380-00	12A-39
32380-00	12B-10
32408-00	54-2
32408-02	54-2
32424-00	33A-16
32429-32	12A-11
32429-33	12A-11
32429-34	12A-11
32429-35	12A-11
32429-36	12A-11
32429-37	12A-11
32429-38	12A-11
32429-39	12A-11
32429-40	12A-11
32429-41	12A-11
32510-00	7B-37
32529-00	7A-24
32529-00	7B-22
32531-00	7A-26a
32531-00	7B-19
32550-00	43-13
32550-00	46-25
32553-10	8C-18
32553-11	8C-19
32553-12	8C-16
32553-13	8C-15
32553-14	8C-8
32553-15	8C-9
32553-16	8C-14
32553-17	8C-12
32553-18	8C-13
32553-19	8C-11
32553-20	8C-10
32553-24	8C-17
32671-09	52-1
32671-10	52-1
32671-11	52-1
32671-12	52-1
32671-13	52-1
32671-14	52-1
32671-15	52-1
32671-16	52-1
32671-17	52-1
32737-02	7B-26
32737-04	7B-26
32739-00	33C-4
32763-02	43-12
32763-02	46-24
32766-00	52-6
32884-00	8B-70
32912-00	28A-1
33038-00	33D-21
33048-00	33D-8
33224-00	52A-2
33227-00	52A-3
33229-02	52A-6
33232-00	52A-4
33234-00	52A-11
33237-02	52A-1
33237-03	52A-1
33237-04	52A-1
33237-05	52A-1
33237-06	52A-1
33237-11	52A-1
33237-12	52A-1
33237-13	52A-1
39994-04	24G-9
39994-04	29A-20
39994-11	10-28
39994-11	10-30
39994-11	10A-36
39994-11	10A-37
39994-13	24G-11a
39998-03	14A-20
39998-03	14A-29
39999-05	31D-27
39999-07	31D-13
40071-00	45-27
40071-00	46-67
40081-00	45-26
40081-00	46-14
40111-00	53-6
41001-00	20-9
41001-00	36-6
41001-03	36-7
41001-03	39-22
41001-03	40-32
41371-02	35-13
41371-03	35-13
41371-04	35-13
41413-38	12A-16
41413-38	12A-32
41481-16	13-26
41481-16	13A-34
41481-16	29-3
41609-00	8B-15
41609-00	8B-17
41609-00	8B-62
41678-00	7B-39
41678-00	7B-40
41678-00	7B-77
41679-00	7B-38
41679-00	7B-77
41706-02	7A-39
41706-02	7B-25
42034-00	7B-87
42038-02	43-13
42038-02	46-25
42129-16	36-82
42129-19	18A-35
42172-04	24B-35
42536-00	5G-56
42537-00	34-9
42538-00	34-37
42571-09	36-12
42740-00	19-65
42740-00	19A-71
42800-03	7B-43
42891-00	12-9
42891-00	38-54
43086-00	7B-77
43255-02	34-38
43360-00	32-59
43360-00	46-22
43360-00	46A-57
43362-00	46-21
43364-00	34-39
43365-00	46-21
43365-00	46A-58
43378-00	28A-1
43404-00	15-41
43775-00	15-43
43813-03	12A-51
43813-04	12A-51
43813-05	12A-51
43813-06	12A-50
43813-07	12A-50
43813-08	12A-50
43909-04	43-21
43909-04	46-49
43909-04	46A-5
43909-09	46-47
43909-09	46A-3
43918-00	47-5
43988-02	39-12
44180-00	32-55
44347-02	8B-5
44347-10	8B-5
44386-00	19A-50
44512-00	12A-52
44762-03	12A-51
44762-04	12A-50
47732-03	33A-35
49999-05	29A-21
49999-06	29A-22
50111-00	12-25
50111-00	12A-18
50111-00	12A-34
50111-00	12B-7
52586-02	46A-22
52588-05	46A-28
52624-02	46A-37
52798-02	7B-40
52826-05	7B-88
53098-00	Misc.
60054-13	13C-63
60054-14	11-63
60054-16	29-38
60054-17	39-65
60054-18	39-15
60054-18	40-10
61323-07	15-15
61323-13	15-21
61402-12	16A-14
61402-13	16A-15
61402-14	16A-15
61402-15	16A-15
61402-24	13B-60
61402-24	13C-56
61402-29	39-50
61402-29	40-65
61402-32	39-46
61402-34	39-51
61402-35	39-47
61402-36	39-48
61402-43	39-52
61402-44	39-66
61402-51	10A-46
61402-64	29A-35
61402-71	20B-14
61402-72	27B-15
61402-80	40-66
61402-84	16-75
61541-24	14A-7
61541-25	14A-22
61541-27	24C-28
61541-33	24C-29
61541-34	24C-30
62226-00	33B-1
62227-00	33B-2
62228-00	33B-3
62342-00	33B-4
62343-00	33B-5
62343-00	33C-4
62355-02	33B-8
62335-02	33C-2
62355-02	Misc.
62355-03	33B-9
62355-03	33C-3
63020-00	10-28
63020-00	10-30
63900-54	12B-5
64076-10	11A-40
64076-13	8B-75
64224-03	28A-7
66537-00	5-30
66537-00	5A-29

Part Number	Fig. and Index
66980-00	13C-72
67212-00	29A-5
68713-00	24A-23
68734-00	24A-25
70371-00	13-22
70371-00	13A-31
70371-00	13B-27
70371-00	29A-37
70371-02	13C-24
70371-02	13C-58
70371-02	24F-9
70371-02	24G-53
70371-02	29-17
70371-03	13B-74
70371-03	13C-25
70371-03	13C-59
70371-03	24F-10
70371-03	24G-54
70371-03	29-16
72381-41	27-9
80002-27	18A-16
80002-54	29-39
80002-79	27B-20
80002-80	18A-16
80006-02	32C-20
80006-03	32C-19
80012-04	38-33
80012-06	16A-43
80012-22	2-38
80012-22	36-39
80012-57	18A-14
80012-77	24C-6
80012-94	2-39
80012-94	36-40
80012-95	34-13
80012-97	18-4
80012-97	25-18
80022-74	36-63
80022-87	36-62
80022-92	3-23a
80022-92	3A-12
80022-92	3B-2
80022-96	20-50
80022-96	38-11
80022-97	5E-22
80022-97	5F-22
80022-100	29A-23
80022-119	20A-16
80032-10	30B-9
80032-10	31C-9
80032-17	31A-27
80032-44	13C-23
80032-51	29B-23
80032-53	15-13
80032-55	15-13
80032-68	32-15
80032-69	30D-20
80032-95	24D-14

Part Number	Fig. and Index
80122-05	11-25
80122-07	9-10
80122-10	18-9
80122-10	18A-26
80122-18	38-34
80122-20	24-29
80122-20	24A-12
80122-20	24B-14
80122-20	24C-47
80122-25	2-41
80122-25	20-7
80122-25	36-9
80122-70	39-23
80122-70	40-33
80122-81	7-33
80122-81	7A-45
80122-81	7B-45
80122-83	7-34
80122-83	7A-46
80122-83	7B-46
80122-84	23-23
80122-86	16-77
80122-88	19-29
80122-88	19A-28
80122-89	19-40
80122-89	19A-41
80122-91	16-11
80122-99	2-80
80122-100	36-72
80122-119	29A-24
80122-120	29A-24
80222-35	25-38
80421-00	36-71
80421-00	38-32
80421-00	39-36
80421-00	40-53
81102-23	36-16
81262-68	11-15
81262-72	23-16
81262-72	23A-19
81262-74	11-40
81262-79	25-5
81262-80	23-36
81262-80	36-64
81262-81	23-36
81262-81	36-64
81262-82	17-30e
81262-83	29-32
81262-92	16A-41
81262-95	17-26f
81342-05	2-40
81342-11	29A-69
81342-13	33B-15
81342-19	13B-76
81342-19	13C-26
81342-19	13C-61
81342-19	25-35
81342-56	32B-15

Part Number	Fig. and Index
81342-56	32C-21
81342-72	5-32
81342-78	34-19b
81342-86	7-10
81342-91	34-30
81342-92	34-29
81342-93	34-5
81761-58	10A-44
82332-26	15-12
82332-34	15-10
82332-36	15-12
82352-47	14-11
82352-50	13A-15
82352-50	13B-43
82371-04	30-31
82371-17	14-2
82371-37	20A-3
82371-37	31-21
82371-47	30C-24
82371-47	31-13
82371-47	31-21
82371-47	31B-20
82371-54	14A-13
82371-77	14-28
82371-78	30-35
82371-79	24-24
82371-80	24D-69
82371-80	30-36
82371-80	30A-31
82371-81	14-2
82371-82	14-5
82371-84	24D-69
82371-84	30B-34
82371-91	14A-7
82371-93	13B-68
82371-93	13C-38
82371-120	24G-103
82371-121	24G-100
82371-122	24G-101
82732-48	20-3
82732-48	20A-7a
82732-68	39-33
82732-68	40-47
82732-75	11-41
82732-98	23D-16
82732-98	23E-10
82732-98	39-55
82732-98	40-42
82732-99	23D-17
82732-99	23E-11
82732-102	27C-16
82732-103	27C-15
82732-107	11A-24
83161-03	15-2
83161-03	15-3
83161-03	15-18
83161-03	24E-9
83161-07	15-3

Part Number	Fig. and Index
83161-14	32A-19
83161-17	7B-73
83161-20	14A-22
83161-27	32A-19
83161-31	24E-9
83161-38	15-31
83302-24	15A-58
83302-24	15B-11
83302-24	15C-11
83302-31	17-23
83302-32	29-33
83302-36	32B-8
83302-37	39-53
83302-37	40-64
83302-39	17-23
83302-40	16-33
83302-40	39-35
83302-40	39-76
83302-40	40-63
83302-42	17-30b
83302-42	39-16
83302-42	40-11
83302-43	11-19
83302-44	14-25
83302-47	11-64
83302-47	11A-21
83302-48	11-65
83302-49	36-50
83302-50	39-28
83302-50	40-34
83302-51	11-78
83302-53	11-91
83302-53	11-92
83302-54	39-76
83302-60	17A-12
83302-61	39-14b
83302-61	40-9b
83302-66	11A-21
83302-67	11A-22
85012-14	29-18
85012-14	29B-16
85012-30	12-27
85012-30	12A-20
85012-30	12A-36
85012-32	30-5
85012-51	24E-37
85012-71	35-14
85012-100	17-32
85012-101	24C-45
85052-26	13-12
85052-26	13A-45
85052-27	13-12
85052-27	13A-46
85512-12	10-53
85512-12	10A-17
85512-13	10-54
85512-20	10A-18
85512-21	10A-19

Part Number	Fig. and Index
86062-86	16-66
86062-86	16A-13
86062-87	16-67
86062-88	16A-12
86062-92	12-33
86062-94	28-8
86062-94	28A-10
86062-100	16-75
86062-102	16-75
86092-66	38-31
86092-82	29A-38
86092-84	18A-6
86102-27	10-28
86102-27	10-30
86102-27	10A-36
86102-56	12-26
86102-56	12A-19
86102-56	12A-35
86142-41	28B-10
90797-90	11-93
91193-00	13B-73
91193-00	13C-60
91193-00	29-26
151 310	38-39
153 310	50-36
180 806	25B-27
180 816	25A-21
180 817	25-4
187 069	32-7
187 069	32-52
187 511	8-45
187 513	2-71
187 514	2-71
187 514	2-73
187 514	2-75
187 514	2-84
187 625	19-28
187 625	19A-29
187 652	5F-63
189 353	25-36
189 410	35-5
400 002	23-38
400 002	23-43
400 002	23A-25
400 003	24-9
400 003	24-10
400 003	24-11
400 003	24A-4
400 003	24A-8
400 003	24A-9
400 003	24B-17

Part Number	Fig. and Index
400 003	24C-49
400 003	24C-50
400 003	24C-51
400 004	16-14
400 004	24-11
400 004	24A-8
400 004	24A-9
400 004	24B-16
400 004	24C-51
400 008	2-60
400 008	39-73
400 012	37-4
400 014	16-10
400 014	24-2
400 014	24A-11
400 014	24C-47
400 015	24-2
400 015	24A-11
400 015	24B-14
400 019	16-77
400 020	16-77
400 045	29B-28
400 055	24F-24
400 055	39-72
400 055	40-69
400 057	39-70
400 058	24F-22
400 063	24C-53
400 065	24F-25
400 105	16A-33
400 106	38-49
400 108	23-49
400 108	23A-31
400 154	29A-69
400 268	24A-14
400 268	24B-13
400 274	24-14
400 313	16-81
400 368	16-81
400 438	2A-38
400 438	19A-68
400 438	23D-20
400 440	2-55
400 441	16A-33
400 444	23F-24
400 463	24A-38
400 463	28A-11
400 464	28B-11
400 675	23-40
400 675	23A-22
400 675	39-74
400 677	40-70
400 692	20A-77
400 693	20A-76
400 708	23-41
400 708	23A-23
400 748	16A-48
400 757	16-80

Part Number	Fig. and Index
400 932	23-33
400 939	17-33
401 054	16-18
401 185	33C-12
401 186	33B-12
401 187	16-1
401 189	2-53
401 263	19A-69
401 264	19A-70
401 266	2A-20
401 266	23-45
401 266	23A-27
401 266	23F-23
401 270	23-39
401 270	23A-21
401 270	38-51
401 270	39-69
401 273	39-75
401 311	2-66
401 311	16A-51
401 311	40-67
401 312	2-62
401 312	38-50
401 315	12B-23
401 329	19A-26
401 333	22-23
401 359	39-71
401 359	40-68
401 380	23-48
401 382	23A-30
401 383	23-47
401 384	23A-29
401 393	2-46
401 393	2-48
401 393	2-50
401 394	2-49
401 396	2-52
401 396	21-46
401 402	24-8
401 402	24A-2
401 403	24B-40
401 404	24-6
401 404	24A-10
401 404	24B-15
401 405	24C-48
401 538	24C-46
402 032	18-5
402 032	18A-20
402 310	38-49
402 311	38-50
402 313	16-70
402 313	19-61
402 313	19A-66
402 315	38-51
402 316	23D-19
402 316	23E-12
402 321	23-31
402 321	23A-40

Part Number	Fig. and Index
402 325	19-24b
402 325	19A-25
402 329	23-37
402 343	16-68
402 343	19-62
402 343	19A-65
402 344	16-69
402 344	19-60
402 344	19-26
402 344	19A-65
402 344	19A-67
402 345	16-68
402 345	19-62
402 345	19A-65
402 346	23-32
402 346	23A-41
402 350	2-44
402 530	16A-34
402 800	19A-64
404 100	23-40
404 100	23A-22
404 100	24C-53
404 100	24F-12
404 100	24F-22
404 100	24F-24
404 100	24F-25
404 100	29B-28
404 100	39-70
404 100	39-72
404 100	40-69
404 101	16-70
404 101	19-61
404 101	19A-66
404 101	23-41
404 101	23-49
404 101	23A-23
404 101	23A-31
404 101	38-49
404 101	38-51
404 102	16-68
404 102	16-69
404 102	19-26
404 102	19-60
404 102	19-62
404 102	19A-65
404 102	19A-67
404 104	24-16
404 104	24A-16
404 104	24B-13
404 105	16A-36
404 224	23-42
404 224	23A-24
404 224	29A-68
404 224	29B-25
404 322	20-49
404 332	11-73
404 392	39-74

Part Number	Fig. and Index
404 392	40-70
404 394	16A-48
404 395	16-80
404 397	16-73
404 398	16-73
404 820	32-12
404 820	32A-26
404 823	11A-27
404 823	11A-29
404 833	7B-41
404 833	29B-27
404 835	17A-15
404 835	20A-60
404 835	28B-11
404 835	29B-29
404 835	33B-14
404 835	38-51
404 836	17-33
404 836	19A-26
404 836	23-33
404 837	33B-12
404 837	33C-12
404 838	16-62
404 838	16A-9
404 838	21-24
404 840	19-41
404 840	19A-42
404 843	19A-42
404 880	24B-17
404 887	2-57
404 887	21-21
404 887	23-39
404 887	23A-21
404 887	28A-11
404 887	33B-11
404 887	39-69
404 888	2-61
404 888	2-65
404 888	2-68
404 888	12B-22
404 888	12B-23
404 888	16-16
404 888	16-77
404 888	16A-51
404 888	19-24b
404 888	19A-23
404 888	22-16
404 888	22-25
404 888	23-37
404 888	23-38
404 888	23-43
404 888	23-44
404 888	23-46
404 888	23A-25
404 888	23A-26
404 888	23A-28
404 888	23A-40
404 888	23D-19

Part Number	Fig. and Index
404 888	23E-12
404 888	24-5
404 888	24A-7
404 888	23C-49
404 888	24C-50
404 888	24C-51
404 888	38-50
404 888	39-73
404 888	40-67
404 889	2-54
404 889	22-16
404 889	23-32
404 889	23-47
404 889	23-48
404 889	23A-20
404 889	23A-29
404 889	23A-30
404 889	23A-41
404 890	2-45
404 890	2-47
404 890	2-51
404 890	24-7
404 890	24A-3
404 890	24B-15
404 890	24B-40
404 890	24C-48
404 900	16-81
404 910	7B-87
404 913	16-81
404 971	11A-30
404 971	11A-31
405 580	29B-26
406 380	13B-64
406 391	24E-38
406 417	24B-43
406 660	16-13
406 682	23-31
406 701	10-4
406 701	10A-3
406 704	7B-41
406 704	7B-87
406 784	7A-54
406 848	53-11
406 870	33B-13
406 870	33B-15
407 041	53-12
407 104	21-35
407 104	33B-13
407 104	33B-15
407 105	29B-24
407 105	29B-26
407 128	16-79
407 134	7B-41
407 135	19A-68
407 562	11-96
407 563	7B-87
407 564	2A-20
407 564	11-95

Part Number	Fig. and Index
407 564	20A-59
407 564	23-39
407 564	23-40
407 564	23-45
407 564	23A-21
407 564	23A-26
407 564	23A-27
407 564	24F-11
407 564	24F-22
407 564	24F-24
407 564	28A-11
407 564	28B-11
407 564	29B-28
407 564	33B-14
407 564	39-69
407 564	39-74
407 564	39-75
407 564	40-70
407 565	2-64
407 565	8B-74
407 565	12B-22
407 565	16-70
407 565	16A-51
407 565	17-33
407 565	19-61
407 565	19A-66
407 565	22-20
407 565	22-24
407 565	23-38
407 565	23-41
407 565	23-43
407 565	23-44
407 565	23-46
407 565	23-49
407 565	23A-23
407 565	23A-25
407 565	23A-28
407 565	23A-31
407 565	23D-19
407 565	23E-12
407 565	24-3
407 565	24A-5
407 565	24B-14
407 565	24B-16
407 565	24B-17
407 565	24C-47
407 565	24C-49
407 565	24C-50
407 565	24C-51
407 565	38-49
407 565	38-50
407 565	38-51
407 565	40-67
407 566	16A-46
407 566	16A-48
407 566	22-20
407 566	23-32
407 566	23-47

Part Number	Fig. and Index
407 566	23-48
407 566	23A-29
407 566	23A-30
407 566	23A-41
407 566	29A-25
407 566	33B-12
407 566	33C-12
407 567	24B-15
407 567	24B-40
407 567	24C-48
407 567	24E-34
407 567	29C-5
407 568	24-15
407 568	24A-15
407 568	24B-13
407 568	24C-46
407 569	16-81
407 569	16A-35
407 569	23A-22
407 569	23F-24
407 570	16-81
407 570	24D-21
407 570	24D-37
407 570	24E-41
407 582	11A-30
407 582	11A-31
407 583	11A-27
407 584	2A-20
407 584	2A-38
407 584	24F-25
407 584	40-69
407 585	2063
407 585	2-67
407 585	16-15
407 585	16-70
407 585	19-24b
407 585	19-61
407 585	19A-23
407 585	19A-26
407 585	19A-66
407 585	20B-34
407 585	21-23
407 585	23-37
407 585	24-4
407 585	24-4a
407 585	24A-6
407 585	24B-14
407 585	24B-17
407 585	24C-47
407 585	24C-49
407 585	24C-51
407 585	40-67
407 586	16-2
407 586	16-68
407 586	16-69
407 586	19-26
407 586	19-60

Part Number	Fig. and Index
407 586	19-62
407 586	19A-65
407 586	19A-67
407 586	23A-20
407 586	29A-69
407 587	16-80
407 587	21-25
407 589	16-73
407 595	14A-16
407 597	16-73
407 610	11A-29
407 674	11A-28
408 803	13B-75
408 803	13C-60
408 827	24G-11
408 827	29A-26
408 831	24F-14
408 831	24G-34a
410 040	8B-73
410 043	4-8
410 043	8B-73
410 047	2-56
410 047	12-17
410 047	12-18
411 201	23A-26
411 230	23-46
411 230	23A-28
411 231	23-44
411 234	8B-74
411 349	16A-8
414 781	11A-27
414 781	11A-34
414 781	11A-44
415 264	10-61
415 264	10A-8
415 266	10-60
415 266	10-61
415 266	10A-7
415 266	10A-8
415 270	10-60
415 270	10A-7
415 289	23B-8
415 289	23C-36
415 292	23B-8
415 292	23C-36
415 445	16-79
415 453	7B-41
415 495	11A-30
415 497	11A-31
415 520	53-10
415 543	11A-29
415 754	29B-27
415 769	39-20
416 794	33B-14
416 995	24C-52
417 703	24G-11b
417 715	33B-13
417 715	33B-15

Part Number	Fig. and Index
417 715	33C-11
418 420	29B-24
418 430	29-25
419 600	19-66
419 600	19A-63
419 600	19A-72
419 946	2-59
419 948	2-58
419 955	17A-13
419 965	33-39
419 973	11-34
419 978	33-50
419 991	23-42
419 991	23A-24
424 051	11-95
424 051	11-96
424 051	11A-33
424 051	16A-48
424 051	23-40
424 051	23-49
424 051	23A-22
424 051	23A-23
424 051	23A-31
424 051	24C-53
424 051	24F-13
424 051	24F-22
424 051	24F-24
424 051	24F-25
424 051	29A-69
424 051	29B-28
424 051	38-49
424 051	38-51
424 051	39-70
424 051	39-72
424 051	39-74
424 051	40-69
424 051	40-70
424 052	16-68
424 052	16-69
424 052	16-70
424 052	19-26
424 052	19-60
424 052	19-61
424 052	19-62
424 052	19A-65
424 052	19A-66
424 052	19A-67
424 052	30A-46
424 059	16-80
424 059	16A-37
424 059	24-17
424 059	24A-17
424 059	24B-13
424 061	29C-27
424 071	16-74
424 144	11-96
424 176	11-85

Part Number	Fig. and Index
424 176	11-95
424 182	11-67
424 184	11-66
424 210	30B-43
434 125	30-47
434 125	30A-36
434 125	30B-37
434 125	31C-32
434 128	31A-51
434 129	31A-52
434 132	15A-11
434 134	14-20
434 134	31A-53
434 135	30C-35
434 135	31B-27
434 138	15A-10
434 138	31B-53
434 140	30C-34
434 140	31-19
450 035	32B-13
450 035	32C-3
450 380	14-14
450 380	14A-1
450 384	32-62
450 390	32-22
450 392	32A-38
450 393	32A-37
450 634	7-13
450 634	7A-40
450 635	7-14
450 635	7A-38
450 636	7-19
450 646	7-11
450 689	7A-47
450 698	7-18
450 704	7-17
450 704	7A-41
450 706	7B-27
450 710	7A-64
450 712	7-50
450 721	7-11
450 724	41-14
450 724	42-12
450 725	41-13
450 726	32-22
450 728	7-11
450 739	7-50
450 739	7A-57
450 749	7A-39
450 757	44-19
450 758	44-22
450 771	31B-39
450 772	31B-45
450 777	7A-65
450 777	7B-30
450 786	7A-67
450 786	32-40
450 787	14-30

Part Number	Fig. and Index
450 787	14A-21
450 788	7A-41
450 788	7B-26
450 794	41-13
450 795	42-11
450 913	24A-24
450 913	29C-1
450 917	24-30
450 924	24A-24
450 932	24C-9
450 934	24A-24
450 934	29C-1
450 972	24-30
450 973	24A-24
451 100	30D-1
451 264	50-17
451 272	49-7
451 272	50-6
451 458	14-18
451 716	16-61
451 716	21-1
451 720	16-59
451 720	16A-28
451 724	16-59
451 724	16A-28
451 735	16-60
451 735	16A-29
451 755	16A-30
451 765	16-58
451 765	22-1
451 778	16-58
451 778	22-1
451 781	16-58
451 781	22-21
451 782	16-65
451 784	16A-30
451 800	53-1
451 801	53-5
451 840	29A-13
451 841	33-23
451 854	7A-52
451 854	24C-18
451 855	28-16
451 857	31A-58
451 857	46-19
451 857	46A-43
451 861	14-12
451 862	43-4
451 862	46-12
451 871	50-32
451 879	31C-87
451 881	14A-23
451 881	46-13
451 905	53-14
451 909	24D-79
451 909	24E-78
451 909	31D-92
451 929	32-50

Part Number	Fig. and Index
451 939	7A-74
451 939	7B-56
451 939	14A-23
451 939	14A-26
451 939	43-4
451 939	46-12
451 939	46A-42
452 011	34-17
452 011	36-5
452 011	36-24
452 011	39-77
452 015	36-84
452 015	40-38
452 019	38-23
452 026	50-29
452 028	24C-19
452 340	34-3
452 344	36-61
452 344	39-56
452 344	40-44
452 345	3-45
452 345	3-47
452 345	3-49
452 345	3-52
452 345	3A-54
452 345	3A-56
452 345	3B-33
452 345	3B-38
452 347	23-15
452 347	23A-18
452 347	23F-8
452 355	34-10
452 356	17-18
452 356	39-64
452 357	16A-32
452 361	36-59
452 361	39-57
452 361	40-45
452 362	36-60
452 362	39-58
452 362	40-46
452 363	23-40
452 363	23-22
452 363	23A-33
452 365	36-55
452 366	19-11
452 366	19A-15
452 367	16-4
452 367	16-8
452 369	34-31
452 370	36-28
452 373	17-12
452 374	38-2
452 376	38-9
452 377	17-15
452 382	16-49
452 383	2-4
452 383	18-8

Part Number	Fig. and Index
452 383	18A-25
452 383	35-2
452 383	36-45
452 383	36-47
452 383	37-6
452 383	38-3
452 385	38-2
452 386	12B-4
452 393	37-3
452 402	32A-31
452 402	Misc.
452 412	17-18
452 412	36-47
452 412	39-64
452 412	40-52
452 897	33-28
452 897	33A-33
453 124	19-43
453 124	19A-57
453 141	8-13
453 141	8-33
453 171	33B-11
453 171	33C-9
453 415	8-13a
453 415	10-51
453 415	10A-34
453 424	7B-49
453 602	36-33
453 616	15-8
453 616	24G-73
453 616	30-55
453 616	30A-48
453 616	30C-30
453 616	31C-15
453 616	31D-12
453 617	14A-6
453 638	34-2
453 639	16-76
453 641	25-8
453 644	5-31
453 652	32-23
453 653	14-31
453 656	28B-7
453 661	7A-7
453 661	12A-48
453 661	33-10
453 664	29A-39
453 688	7A-7
453 688	12A-48
453 694	7B-76
453 732	15B-12
453 732	15C-12
453 799	7B-42
453 865	7B-85
454 069	25-22a
454 175	33-38
454 648	33-2
454 648	50-21

Part Number	Fig. and Index
454 654	33-2
454 656	33-2
454 656	33-30
454 656	33A-27
454 656	33D-20
454 656	43-3
454 656	44-26
454 656	45-25
454 656	46-10
454 656	46A-46
454 656	54-6
454 657	33-2
454 657	33A-27
454 657	49-10
454 657	50-33
454 658	33-3
454 658	33A-27
454 659	33-2
454 659	33A-27
454 661	33-2
454 661	33A-27
454 662	33-2
454 664	41-17
454 664	42-28
454 667	33-2
454 712	33A-27
454 803	24B-12
454 805	13C-28
454 815	31D-87
454 816	24C-39
454 816	28A-9
454 832	14A-12
454 833	15-33
454 833	15B-64
454 833	15C-62
454 833	24E-8
454 848	24F-16
454 848	27C-10
454 855	31B-50
454 860	13C-31
454 863	31A-9
454 864	13-17
454 864	13C-30
454 864	24F-15
454 864	27C-11
454 867	34-11
454 867	36-4
454 867	36-85
454 867	39-29
454 867	40-37
454 868	14A-18
454 869	7-9
454 873	25-32a
454 873	25-33a
454 873	25B-10a
454 873	25B-15a
454 881	14A-30
454 882	14-4

Part Number	Fig. and Index
454 887	13B-63
454 887	13C057
454 890	25-32a
454 890	25-33a
454 895	13-16
454 895	13C-29
454 895	13C-83
454 901	18-2
454 903	14A-12
454 904	14-19
454 904	14-29
454 904	14A-30
454 921	24D-38
454 921	30-37
454 921	30A-32
454 921	30B-35
454 921	30C-27
454 921	31A-41
454 921	31C-36
454 921	31D-57
454 922	31B-32
454 925	32B-7
454 925	32C-22
454 929	24F-21
454 933	28-8a
454 933	28-18
454 933	28-19
454 949	31B-49
454 972	30-43
454 981	13C-31
454 982	8-43
454 982	8B-51
454 983	13C-27
454 983	24C-41
454 983	24D-39
454 983	24E-44
454 983	31A-29
454 983	31C-35
454 983	31D-56
454 983	46-64
454 986	32-37
454 987	13B-77
454 987	13C-33
454 987	14A-19
454 993	13C-82
454 993	24B-36
454 993	27D-8
454 994	13C-80
454 997	24C-58
455 124	19-42
455 124	19A-58
455 149	14-9
455 149	31B-48
455 177	24F-6
455 177	29-15
455 177	29A-55
455 180	17-22
455 181	29-9

Part Number	Fig. and Index
455 182	29-14
455 184	29-9
455 185	29-14
455 185	29B-3
455 215	32-36
455 216	32-35
455 222	20A-33
455 226	51-8
455 227	51-8
455 228	51-8
455 229	51-8
455 236	29-9
455 256	20A-33
455 268	29B-4
455 272	20A-33
455 274	24C-43
455 292	32-51
455 299	29-14
455 342	32B-20
455 342	32C-5
455 929	20A-34
455 931	20B-19
456 388	53-2
456 704	32B-26
456 704	32C-7
456 728	33B-6
456 728	33C-7
458 864	24E-56
458 864	31C-45
458 866	31C-44
458 867	23G-87
458 868	24G-91b
458 871	24D-30
458 871	24E-56
458 871	24G-91c
458 871	31A-55
458 872	24G-106
458 875	31A-83
458 876	24D-33
458 876	30D-25
458 876	31A-56
458 876	31D-48
458 880	15-27
458 883	14-7
458 886	24B-18
458 886	24B-19
458 886	28B-5
458 888	44-24
458 890	30B-11
458 890	30C-29
458 890	31C-11
458 890	31D-10
458 891	15-26
458 891	20-35
458 891	20A-64
458 892	24G-88a
458 892	30A-9
458 892	30B-5

Part Number	Fig. and Index
458 892	31C-82
458 892	31D-77
458 893	7-38
458 893	7A-36
458 893	7B-75
458 893	14-32
458 893	30-8
458 894	20-22
458 894	20B-15
458 894	20B-37
458 895	24G-88
458 895	30-27
458 895	30B-67
458 895	31C-43
458 896	30-41
458 896	30A-47
458 897	30-27
458 897	30-42
458 897	30-54
458 897	30A-10
458 897	30A-34
458 897	30A-49
458 897	30B-11
458 897	30B-55
458 897	31C-10
458 897	31C-83
458 897	31D-9
458 897	31D-78
458 898	14A-15
458 898	28A-3
458 898	28B-6
458 900	20-36
458 900	20A-73
458 901	30-45
458 904	31C-47
458 905	28A-3
458 905	28A-4
458 909	15-6
458 909	31C-46
458 910	15-28
458 910	20B-16
458 910	24G-109
458 911	30-45
458 912	30-50
458 912	31A-54
458 919	30-53
458 919	30A-50
458 919	30B-68
458 919	31C-48
458 925	14A-31
458 928	14A-11
458 928	15-34
458 929	24G-108
458 929	45-24
458 931	28-12
458 931	28-15
458 932	28-11
458 932	28-15

Part Number	Fig. and Index
458 934	20-53
458 934	31A-87
458 936	31D-47
458 941	14-27
458 941	14A-10
458 945	7A073
458 945	7A-74
458 945	14A-26
458 945	14A-27
458 945	43-5
458 945	44-29
458 945	46-18
458 947	30D-25
458 948	14A-23
458 948	30A-27
458 948	30B-31
458 948	31C-49
458 948	43-7
458 958	14A-32
459 844	Misc.
459 928	34-18
459 930	34-12
459 958	36-83
459 961	24B-42
460 628	24C-13
460 632	24-35
460 632	24A-36
460 634	32-19
460 661	14-17
460 663	15-27
460 669	24-36
460 669	24A-40
460 670	28A-4
460 682	7-32
460 682	7A-51
460 682	7B-51
460 683	30-48
460 683	30A-37
460 683	30B-38
460 683	31C-63
460 684	30-49
460 684	30A-38
460 684	30B-39
460 684	31C-62
460 685	15-14
460 687	16-45a
460 690	19-3
460 690	19-13
460 690	19-24
460 690	19A-3
460 690	19A-9
460 690	19A-22
460 691	16-5a
460 691	16-9
460 691	16-32a
460 691	16-41
460 691	19-7
460 691	19-54

Part Number	Fig. and Index
460 691	19A-9
460 691	19A-10
460 691	19A-45
460 691	24A-45
460 691	24B-20
460 691	24C-44
460 783	53-9
460 798	14A-28
460 860	16-32a
460 901	33-27
460 901	33A-32
461 133	39-78
461 136	36-25
461 622	33-4
461 623	33A-29
461 628	33A-28
462 006	13C-22
462 012	32-14
462 014	30C-28
462 014	31-14
462 014	31B-21
462 018	7A-68
462 018	32-38
462 019	31B-36
462 019	31B-42
462 021	31-16
462 021	31B-16
462 023	24G-90
462 031	28A-13
462 034	19-32
462 034	19A-31
462 042	32-13
462 044	7A-69
462 044	32-39
462 046	32-13
462 058	31A-76
462 060	24D-22
462 060	24D-81
462 060	24E-18
462 060	24E-23
462 060	24E-71
462 060	24E-76
462 060	31A-48
462 060	31C-88
462 060	31D-55
462 060	31D-95
462 061	31A-85
463 369	31-7
463 372	5-29
463 377	20-1
463 380	20-1
463 380	20A-8
463 391	5-29
463 391	5A-28
463 391	31A-49
464 022	11-26
464 023	38-37
464 031	11-26

Part Number	Fig. and Index
464 327	49-6
464 327	50-23
464 329	8-1
464 330	8-1
464 331	12-32
464 332	12-32
464 333	8A-7
464 334	8A-7
464 335	8A-7
464 362	Misc.
465 162	32-8
465 256	33-3
467 062	49-8
467 062	50-7
467 063	50-19
468 002	33-40
468 002	33A-21
468 002	49-21
468 002	50-14
468 003	49-22
468 003	50-15
468 006	33-41
468 006	33A-22
468 340	30D-14
469 132	37-10a
469 132	37-17
469 138	18A-18
470 656	32-32
470 657	32-33
470 660	24D-58
470 660	24E-26
470 660	31A-33
470 660	31D-69
470 669	32-32
470 670	32-33
471 049	29B-6
471 051	13-1
471 056	17-2
471 059	8B-19
471 059	8B-26
471 059	13A-13
471 059	13B-18
471 059	13B-39
471 060	13A-39
471 068	33-14
471 068	50-54
471 070	50-38
471 074	37-21
471 075	8-9
471 075	8-34
471 079	8-19
471 079	11-47
471 079	13B-33
471 080	11-35
471 080	20-15
471 082	13B-39
471 093	12A-27
471 093	12A-42

Part Number	Fig. and Index
471 095	8-19
471 095	11-47
471 095	13B-33
471 096	8-19
471 096	11-47
471 096	13B-33
471 097	13B-39
472 017	25-12a
472 017	25-33d
472 026	32A-44
472 028	38-52
472 036	32A-11
472 037	7A-18d
472 037	7A-19h
472 037	7B-86
472 037	33-20
472 038	32A-10
472 038	32A-11
472 054	7B-9
472 054	33-20
472 054	33A-19
472 054	38-53
472 054	47-6
472 064	52A-5
472 332	33-19
472 332	33A-18
472 333	33-19
472 333	33A-18
472 334	33-26
472 338	33A-18
472 653	33-15
472 653	33A-34
472 661	32A-30
472 665	2-26
472 665	32A-7
472 666	2-23
472 666	32A-4
472 667	23-8
472 667	32A-1
472 684	34-14
472 694	33-18
472 694	33A-17
472 736	23-8
472 736	23A-5
472 736	32A-1
472 770	32-47
472 770	32-53
472 770	46-39
472 770	46-73
472 776	7B-62
472 816	7B-83
473 184	8B-39
474 055	15A-19
474 055	15B-21
474 055	15C-21
474 055	15C-21
474 085	15A-19
474 085	15B-21

Part Number	Fig. and Index
474 085	15C-21
474 087	15A-19
474 087	15B-21
474 087	15C-21
474 345	34-1a
474 647	49-5
474 647	50-22
474 647	Misc.
474 649	49-5
474 649	50-22
474 654	Misc.
475 105	24B-13
475 109	7B-87
475 112	24C-10
475 117	24C-11
475 121	24-13
475 122	24A-13
475 126	7A-17
475 127	7-7
475 128	7-6
475 130	45-73
475 130	46-15
475 192	39-19
475 192	40-12
476 643	15-35
476 645	14-11
476 647	7B-54
476 647	14-33
476 647	14A-24
476 647	15-8
476 648	20-21
476 648	21-29
476 649	24D-42
476 649	31A-64
476 662	30-54
476 662	30B-66
476 662	31C-85
476 664	24B-18
476 664	28A-2
476 671	30-40
476 673	32-44
476 673	33B-7
476 674	32-43
476 678	24D-29
476 678	24E-45
476 679	24G-78
477 617	15-24
477 617	24D-35
477 617	24E-36
477 617	31A-70
477 617	31C-60
477 617	31D-52
477 618	15-25
477 618	20-30
477 618	20A-74
477 618	20B-18
477 618	24C-42
477 618	24G-110

Part Number	Fig. and Index
477 618	31A-88
477 619	24D-34
477 619	31A-69
477 619	31C-86
477 619	31D-51
477 620	24D-19
477 620	24D-36
477 620	24E-19
477 620	30-46
477 620	31A-68
477 620	31C-61
477 620	31D-53
477 620	31D-97
477 621	28A-14
477 623	30-46
477 624	14A-14
477 629	20A-71
477 631	24D-18
477 631	24E-28
477 631	24E-70
477 631	31A-67
477 631	31D-54
477 635	24E-6
477 664	24C-46
477 677	24C-20
477 695	32A-42
479 620	24E-40
480 024	8-2
480 025	8-2
480 650	24-21
480 650	24-38
480 650	24A-31
480 650	24A-39
480 682	16-73
480 682	38-25
480 683	11-68
480 683	12-27e
480 687	19A-63
480 688	10-59
480 688	10A-40
480 690	12B-14
480 691	16-73
480 695	19-19
480 700	19-19
480 700	19A-48
480 700	36-37
480 701	12-27d
480 701	12A-25
480 701	12A-41
480 701	12B-12
480 705	17-20a
480 706	11-69
480 707	38-25
480 727	12B-13
480 733	11A-25
480 734	11A-26
480 915	50-31
480 937	30B-12
480 937	31C-12

Part Number	Fig. and Index
480 937	31C-12
480 937	31D-11
480 950	50-50
480 997	53-14
481 002	53-16
481 054	32-34
481 062	24D-40
481 062	29B-19
481 062	29A-43
481 062	29A-44
481 062	29A-45
481 062	31A-28
481 062	42-19
481 062	42-20
481 360	53-3
481 621	36-68
481 621	38-19
481 621	38-40
481 623	36-36
481 623	39-43
481 640	36-81
481 640	46-67
481 666	30-56
481 666	30A-51
481 666	30B-72
481 666	31C-64
481 667	14-13
481 681	14A-2
481 686	24D-24
481 686	24E-11
481 686	31D-58
481 691	31A-23
481 692	14A-2
481 740	24D-74
481 740	24E-16
481 740	31D-88
484 193	52A-10
484 214	52A-9
484 278	7B-8
484 306	31A-84
484 308	38-53
484 322	25A-16
484 326	7A-18b
484 326	7A-19g
484 327	7A-18c
484 327	7A-19g
484 341	25-15
484 341	25B-18
484 342	5-27
484 342	25-27
484 342	26B-14
484 342	30C-5
484 342	31-3
484 342	31B-6
484 342	31B-58
484 345	25-27
484 348	7-20
484 348	7A-20

Part Number	Fig. and Index
484 348	7B-44
484 361	50-60
484 362	50-28
484 365	51-11
484 372	51-11
484 373	33B-10
484 373	33C-8
484 380	33-29
484 384	51-12
484 385	8-12
484 385	8-32
484 388	51-13
484 395	51-12
484 396	51-12
484 398	33-13
484 410	51-13
484 424	33-13
484 464	8B-76
484 575	32A-45
484 582	33-12
484 583	33-12
484 585	52-4
484 585	52A-7
484 654	28-1a
484 654	28-2a
484 698	21-10
484 700	20-45
484 700	20A-56
484 701	20-42
484 701	20A-42
484 701	20B-24
484 701	21-29a
484 702	20-40
484 706	20-41
484 706	20A-43
484 706	20B-25
484 707	30C-9c
484 707	31-7c
484 707	31B-62
484 708	21-17
484 708	30C-9d
484 708	31-7d
484 708	31B-63
484 711	19-23
484 711	19A-21
484 711	21-10
484 712	19-38
484 712	19A-39
484 713	19-31
484 713	19A-32
484 714	19-39
484 714	19A-40
484 717	19-27
484 717	19A-34
484 718	19-30
484 718	19A-27
484 719	16-5
484 721	20-39
484 723	19-39

Part Number	Fig. and Index
484 723	19A-47
484 728	30A-7
484 728	30B-52
484 728	31C-80
484 728	31D-75
484 734	19A-32
484 735	19A-36
484 744	15-23
484 745	25A-20
484 745	25A-27
486 380	14-8
486 562	53-8
486 575	7-35
486 575	7A-55
486 576	7-35
486 580	7-35
486 582	7A-55
486 879	53-7
486 907	24E-7
487 149	32-5
487 149	32-58
487 152	32A-16
487 152	32A-35
487 154	39-12
487 154	40-7
487 248	24-27
487 248	24A-25
487 288	31-3
487 291	36-76
487 291	36-80
487 291	39-67
487 350	7A-34
487 350	7B-48
487 370	14A-5
487 436	24C-12
487 437	24F-23
487 437	27C-19
487 440	24C-12
487 527	33-6
487 542	10-56
487 545	7A-14
487 560	12A-53
487 570	7A-66
487 571	24A-30
487 583	25-11
487 588	5-24
487 590	30C-8
487 590	31-6
487 590	31B-9
487 590	31B-64
487 592	31-6
487 594	7-42
487 594	7A-53
487 604	24-20
487 607	41-12
487 608	42-29
487 616	24-37
487 616	24A-38
487 618	25-24

Part Number	Fig. and Index
487 619	25-25
487 629	8-54
487 643	25-25
487 644	25-24
487 648	10-56
487 657	45-19
487 658	25A-19
487 659	25A-25
487 661	25A-26
487 692	30C-8
487 692	31-6
487 717	26B-16
487 726	7B-47
487 777	32A-12
487 790	33-1
487 790	50-39
487 798	50-48
487 804	29A-4
487 805	16-51
487 805	32A-28
487 805	39-24
487 805	40-35
487 818	33-9
487 819	33-25
487 820	16-51
487 820	32-10
487 820	32-60
487 820	32A-24
487 820	32A-28
487 821	50-40
487 828	33-1
487 829	51-5
487 831	51-7
487 834	51-6
487 839	33-37
487 839	33A-6
487 842	24D-65
487 842	30B-61
487 842	30C-41
487 842	31A-39
487 842	31C-56
487 842	31D-36
487 845	33-22
487 845	33-36
487 846	51-7
487 847	51-6
487 848	51-5
487 859	32-48
487 859	45-66
487 860	33-1
487 860	33-46
487 860	46-16
487 861	45-66
487 861	46-72
487 861	46-81
487 862	32-10

Part Number	Fig. and Index
487 864	16-51
487 864	32A-24
487 864	32A-28
487 865	33-36
487 865	33A-5
487 871	33-46
487 873	45-66
487 873	46-71
487 873	46-78
487 876	51-7
487 904	34-40
487 904	46-37
487 904	46A-56
488 310	7-37
488 310	7-40
488 310	7A-36
488 310	7A-48
488 310	7B-59
488 310	7B-72
488 310	15-36
488 310	15-39
488 310	46-69
488 310	46A-44
488 311	20-29
488 311	20B-17
488 314	30-44
488 314	30B-69
488 314	31C-41
488 317	30-44
488 317	30A-35
488 318	30D-5
488 327	16-52
488 327	29A-67
488 331	20A-72
488 381	30-34
488 381	30A-30
488 471	24D-17
488 471	24E-20
488 471	31A-65
488 471	31D-64
488 472	24D-17
488 472	24D-20
488 472	24E-20
488 472	24E-24
488 472	31A-66
488 472	31D-64
488 472	31D-67
488 474	15-36
488 525	15-39
488 525	46-65
489 372	50-27
489 372	51-10
489 375	40-13
489 390	8B-15
489 390	8B-17
489 724	24D-41
489 724	24E-42
489 777	31A-6

Part Number	Fig. and Index
491 048	30D-3
491 049	15-6
491 049	30-22
491 049	30-38
491 050	15-26
491 050	20-26
491 050	20A-68
491 050	31A-86
491 051	30-39
491 051	30A-33
491 051	30B-36
491 051	30C-25
491 051	31C-42
491 051	31D-43
491 052	24D-15
491 052	24D-82
491 052	24E-21
491 052	24E-74
491 052	31A-60
491 052	31C-85
491 052	31D-63
491 052	31D-94
491 055	31A-91
491 056	24E-45
491 056	31A-34
491 056	31D-44
491 058	30D-25
491 058	31D-46
491 060	20A-70
491 062	24D-32
491 062	24D-76
491 062	24E-42
491 062	24E-75
491 062	31A-62
491 062	31D-45
491 062	31D-96
491 063	20A-69
491 064	24D-31
491 064	31A-61
491 066	24D-16
491 066	24E-25
491 066	31A-63
491 066	31D-68
492 029	14-10
492 031	20-17
492 059	14-16
492 059	14A-8
492 060	20-17
492 065	14A-8
492 068	30B-1
492 068	31C-1
492 068	31D-1
492 069	30B-1
492 072	24D-23
492 072	24E-22
492 072	31A-34
492 072	31D-66
492 082	13C-22

Part Number	Fig. and Index
492 084	31A-30
492 100	15-29
492 103	31A-82
492 643	32-29
492 671	32-29
492 674	32-29
494 004	11A-34
494 004	11A-44
494 060	5-25
494 060	25-12
494 060	26B-15
494 060	30C-9
494 060	31-7
494 060	31B-10
494 060	31B-65
494 060	45-18
494 063	30C-23
494 065	25-26
494 087	33B-14
494 088	25-26
494 098	31B-39b
494 644	30-3
494 660	40-40
494 667	53-3
502 329	23A-20
550 380	32-57
550 383	32-56
550 557	43-27
550 557	48-3
550 559	46-58
550 559	46A-20
550 559	48-3
550 623	7A-5
550 623	Misc.
550 625	45-54
550 625	48-3
550 626	42-11
550 626	45-55
550 626	48-1
550 640	42-11
550 641	45-54
550 642	42-12
550 643	42-11
550 643	45-55
550 644	42-11
550 644	45-55
550 644	48-1
550 645	42-12
550 645	48-3
550 646	7A-40
550 647	7A-38
550 664	14A-21
550 666	7A-5
550 666	Misc.
550 759	Misc.
550 776	45-54
550 776	48-3
550 777	42-12

Part Number	Fig. and Index
550 777	48-3
550 778	42-11
550 778	42-26
550 778	45-55
550 778	46-57
550 778	46A-19
550 778	48-1
550 779	42-11
550 779	45-55
550 779	48-1
550 782	7A-41
550 804	7B-29
550 853	Misc.
550 907	29C-1
550 919	29C-1
550 926	24B-7
550 926	29C-1
550 927	24B-7
550 927	29C-1
551 114	43-14
551 114	46-26
551 114	46A-23
551 131	44-17
551 131	45-44
551 134	44-23
551 135	44-20
551 215	Misc.
551 216	54-1
551 229	Misc.
551 233	54-2
551 701	16-61
551 701	21-1
551 702	16-61
551 702	21-1
551 704	16-61
551 704	21-30
551 750	16-58
551 750	22-1
551 752	16-58
551 752	22-1
554 757	11-82
554 757	29-22
554 778	24G-17
554 778	24G-60
554 778	24G-111
554 802	14A-30
554 817	24C-40
554 824	27C-7
554 871	31-13
554 882	13C-81
554 888	30C-26
554 911	24B-37
554 992	24F-17
558 901	14A-15
558 904	14A-23
558 911	30A-27
558 911	30B-31

Part Number	Fig. and Index
558 913	7A-73
558 913	14A-26
558 913	43-6
558 913	46-17
558 936	7B-57
558 936	14A-27
558 936	46-18
558 936	46A-40
558 937	7B-58
558 937	14A-26
558 937	43-5
558 937	43-6
558 937	43-8
558 937	46-13
558 937	46-17
558 937	46A-41
565 325	32-8
565 446	8-72
565 446	8A-32
565 446	8B-6
571 041	8A-35
571 059	29B-5
571 098	33-48
571 107	24G-7
571 107	29A-8
571 109	12A-27
571 109	12A-42
571 112	33A-13
571 112	46-83
571 114	33A-14
571 114	52-5
571 127	52A-8
571 131	12B-17
580 887	14-22
581 043	53-9
581 623	33D-7
581 753	53-15
581 783	24D-78
581 783	24E-77
581 783	31D-91
587 865	32-28
587 865	46-38
587 865	46A-55
587 867	52A-12
587 868	52A-13
587 869	52A-14
596 159	32-64
596 071	52-2
596 072	52-3
750 272	30-6
751 118	7-12
751 118	7A-50
751 118	7B-16
751 145	7-51
751 145	7A-60
751 145	7B-71
751 201	2-25
751 201	32A-6

Part Number	Fig. and Index
751 202	2-28
751 202	32A-9
751 203	23-10
751 203	23A-7
751 203	32A-3
751 228	3-22
751 228	3A-75
751 232	41-5
751 232	44-20
751 239	45-48
751 240	45-38
751 262	42-5
751 263	45-48
751 272	42-13
751 272	45-23
751 276	45-5a
751 276	46-51a
751 277	45-69
751 278	46-86
751 283	43-18
751 284	46-52
751 291	7A-43
751 291	7B-70
751 294	7B-80
751 300	47-1
751 301	46-51b
751 301	46A-2
751 308	33B-7
751 310	24G-19
751 311	24G-42
751 314	46A-7
751 316	53A-4
751 317	53A-5
751 318	53A-6
751 319	53A-7
751 381	2-24
751 381	2-27
751 381	32A-5
751 381	32A-8
751 382	23-9
751 382	32A-2
751 384	22-19
751 402	21-11
751 403	21-15
751 404	21-16
751 405	22-19
751 412	41-9
751 412	42-30
751 412	45-58
751 445	20A-57
751 446	20A-61
751 448	32A-32
751 449	39B-6
751 449	31C-6
751 449	31D-6
751 450	21-22
751 454	16-4
751 454	16-8

Part Number	Fig. and Index
751 460	44-18a
751 460	45-29
751 461	44-18b
751 461	45-30
751 468	21-22
751 489	22-8
751 489	22-29
751 494	22-3
751 494	22-7
751 502	19-44
751 502	19A-59
751 503	22-33
751 503	22-35
751 507	21-9
751 508	21-12
751 517	40-14
751 518	40-16
751 519	41-2
751 521	41-10
751 521	44-15
751 523	41-4
751 525	41-11
751 526	7-35a
751 526	7A-55a
751 527	7-35a
751 529	33-15a
751 543	7-35a
751 556	30-61
751 556	30A-56
751 556	30B-77
751 573	20A-35
751 672	22-4
751 763	22-30
751 767	30C-21a
751 767	31-17a
751 767	31B-18
751 767	32A-23
751 772	22-11
751 783	41-8
751 783	44-20b
751 786	22-28
751 793	21-29
751 794	16-49a
751 795	16-49b
751 796	31A-32
751 799	30-65
751 799	30A-60
751 799	30B-81
751 799	31C-71
751 810	22-14
751 811	15A-55
751 811	15B-57
751 811	15C-55
751 812	15A-56
751 812	15B-58
751 812	15C-56
751 813	15A-35
751 813	15B-60

Part Number	Fig. and Index
751 813	15C-58
751 814	15A-36
751 814	15B-61
751 814	15C-59
751 815	14A-9
751 820	29C-19
751 833	24-28a
751 833	24A-26a
751 834	19-45
751 843	40-15
751 857	30-58
751 857	30A-53
751 857	30B-74
751 858	30-59
751 858	30A-54
751 858	30B-75
751 859	14A-3
751 862	21-32
751 868	24D-24a
751 868	24E-12
751 868	31A-25
751 868	31D-59
751 871	31A-31
751 872	30-64
751 872	30A-59
751 872	30B-80
751 872	31C-73
751 873	7A-26a
751 896	15B-14
751 896	15C-14
751 913	15A-12
751 913	15B-14
751 915	7A-77
751 915	7B-63
751 917	24D-24e
751 917	24E-15a
751 917	31A-26b
751 950	21-31
751 952	45-52
751 954	42-8
751 987	43-17
751 989	46-40
751 993	46-41
751 996	46-42
752 010	47-2
752 011	47-3
752 015	29C-2
752 016	30C-11a
752 016	31-15a
752 016	31B-19a
752 016	31B-32a
752 020	29C-2
752 027	29C-18
752 054	7-22
752 054	7A-22
752 055	7-23
752 055	7A-23

Part Number	Fig. and Index
752 056	7-24
752 056	7A-24
752 057	7-25
752 057	7A-25
752 058	7-26
752 058	7A-26
752 064	7A-22
752 072	21-39
752 073	21-43
752 074	22-39
752 075	7A-22
752 075	7B-20
752 076	7A-23
752 078	7A-25
752 078	7B-21
752 079	7A-26
752 080	7A-22
752 087	7A-5
752 087	Misc.
752 088	7A-5
752 088	Misc.
752 092	45-55
752 093	45-54
752 094	21-10a
752 105	21-49
752 120	7A-77
752 122	15A-22
752 122	15B-24
752 122	15C-24
752 307	32A-32
752 308	21-3
752 309	21-7a
752 333	32-4
752 334	45-43
752 335	21-7a
752 336	21-3
752 349	11-11
752 349	11A-4
752 350	11-11
752 355	15A-13
752 355	15B-15
752 355	15C-15
752 371	47-4
752 483	19-41
752 490	20A-53
752 490	20B-35
752 491	20A-38
752 492	24D-24c
752 492	24E-14
752 492	31D-61
752 497	31A-24
752 504	15A-54
752 504	15B-56
752 504	15C-54
752 505	15A-57
752 505	15B-59
752 505	16C-57
752 511	29C-6

Part Number	Fig. and Index
752 513	29C-26
752 530	29C-12
752 534	29C-34
752 540	24G-77
752 542	24G-92
752 581	15A-16
752 581	15B-18
752 581	15C-18
752 735	21-14
752 742	30B-2
752 742	31C-2
752 742	31D-2
752 746	20A-47
752 746	20B-29
752 749	21-2
752 750	21-6
752 751	21-8
752 767	21-7
752 768	21-1a
752 791	20-19
752 791	20A-66
752 798	20-18
752 818	22-27
752 819	22-26
752 820	22-31
752 822	30-1a
752 822	30A-2
752 826	21-4
752 829	22-10
752 830	22-12
752 844	20-19
752 847	20A-39
752 847	20B-21
752 848	20A-40
752 848	20B-22
752 850	30B-7
752 850	31C-7
752 850	31D-7
752 855	20A-50
752 855	20B-32
752 869	30-69
752 869	30A-64
752 869	30B-85
752 869	31C-70
752 882	22-9
752 944	21-13
752 945	21-18
752 946	21-19
752 953	21-5
752 955	41-7a
752 955	44-20d
752 965	21-27
752 966	21-26
752 967	41-1a
753 028	21-44
753 035	45-50
753 036	42-10
753 036	45-2

Part Number	Fig. and Index
753 074	15A-21
753 074	15B-23
753 074	15C-23
753 078	21-47
753 081	15B-71
753 081	15C-64
753 109	30B-5
753 110	20A-65
753 113	21-34
753 114	30B-5
753 115	30B-5
753 115	31C-5
753 115	31D-5
753 119	30-66
753 119	30A-61
753 119	30B-82
753 119	31C-67
753 128	22-6
753 148	21-20
753 157	22-2
753 171	20A-37
753 172	19-51
753 172	19A-74
753 173	20A-52
753 176	22-2
753 182	22-32
753 184	22-34
753 190	45-37
753 193	30-68
753 193	30A-63
753 193	30B-84
753 193	31C-69
753 194	22-6
753 195	22-2
753 197	21-45
753 212	7A-42
753 212	7B-69
753 381	20A-48
753 381	30B-30
753 431	23-9
753 431	23A-6
753 431	32A-2
753 433	15A-14
753 433	15B-16
753 433	15C-16
753 435	15A-42
753 435	15B-43
753 437	15A-23
753 437	15B-55
753 437	15C-53
753 461	29C-3
753 463	29C-15
753 464	29C-20
753 496	43-20a
753 496	46-55b
753 496	46A-13
753 501	41-1
753 633	45-46

Part Number	Fig. and Index
753 634	42-1
753 634	45-41
753 637	24D-24b
753 637	24E-13
753 637	31D-60
753 650	30-70
753 650	30A-65
753 650	30B-86
753 650	31C-72
753 678	45-46
753 692	Misc.
753 693	45-5
753 693	46-51
753 721	43-21
753 721	46-47
753 721	46-49
753 743	15A-19
753 743	15B-21
753 743	15C-21
753 777	31A-26a
753 827	20A-54
753 827	20B-36
753 828	20A-55
753 829	7A-55a
753 838	44-10
753 840	44-13
753 841	44-7
753 841	45-53
753 843	44-4
753 843	45-47
753 845	44-6
753 846	44-18
753 850	21-28
753 858	44-11
753 863	21-40
753 864	21-42
753 867	21-12
753 868	45-28
753 869	24D-24d
753 869	24E-15
753 869	31A-26
753 869	31D-62
753 870	42-2
753 872	45-42
753 873	45-57
753 874	21-12
753 877	42-5
753 878	42-9
753 878	45-70
753 880	42-27
753 886	20B-20
753 910	14A-4
753 916	45-49
753 932	42-16
753 932	45-75
753 938	15A-15
753 938	15B-17
753 938	15C-17

Part Number	Fig. and Index
753 941	15A-25
753 941	15B-27
753 941	15C-27
753 942	15A-40
753 942	15B-41
753 942	15C-67
753 943	15A-43
753 943	15B-44
753 943	15C-45
753 944	15A-49
753 944	15B-50
753 944	15C-49
753 945	15A-51
753 945	15B-52
753 945	15C-51
753 947	15A-45
753 947	15B-47
753 947	15C-48
753 948	7A-80
753 948	7B-66
753 949	7A-81
753 949	7B-67
753 974	15A-20
752 974	15B-22
753 974	15C-22
753 975	15A-20
753 975	15B-22
753 975	15C-22
753 981	43-16
753 981	46-45
753 981	46A-60
754 181	8-19
754 181	11-47
754 181	13A-52
754 181	13B-33
754 182	Misc.
754 183	Misc.
754 184	Misc.
754 186	Misc.
754 187	Misc.
754 188	Misc.
754 189	Misc.
754 203	8-14
754 203	11-42
754 203	13A-47
754 203	13B-30
754 209	41-6
754 209	44-20c
754 210	41-7
754 210	44-20a
754 211	41-3
754 212	41-25
754 216	11-13
754 218	Misc.
754 227	11-36
754 228	11-39
754 232	Misc.
754 272	Misc.

Part Number	Fig. and Index
754 285	Misc.
754 321	Misc.
754 337	Misc.
754 354	Misc.
754 355	Misc.
754 356	Misc.
754 359	Misc.
754 360	Misc.
754 361	Misc.
754 364	45-39
754 365	44-31
754 365	45-40
754 366	42-6
754 366	44-12
754 366	45-31
754 367	44-23a
754 368	44-9
754 368	45-32
754 369	44-32
754 369	45-34
754 370	44-33
754 370	45-33
754 409	22-38
754 415	Misc.
754 429	16A-17
754 435	Misc.
754 436	Misc.
754 437	Misc.
754 469	Misc.
754 474	Misc.
754 482	Misc.
754 483	Misc.
754 525	21-41
754 527	32A-33
754 530	22-5
754 545	22-5
754 547	15A-18
754 547	15B-20
754 547	15C-20
754 554	22-5
754 585	24G-38
754 586	24G-43
754 587	24G-44
754 588	24G-45
754 589	24G-46
754 590	24G-47
754 591	24G-48
754 592	24G-49
754 593	24G-95
754 761	15A-48
754 761	15B-36
754 761	15B-49
754 762	15A-53
754 762	15B-54
754 769	15B-13
754 769	15C-13
754 772	24G-15
754 773	24G-74

Part Number	Fig. and Index
754 774	24G-75
754 775	24G-76
754 776	24G-107
754 807	43-24
754 807	46-59
754 807	46A-18
754 815	29C-19
754 817	15-42
754 821	24G-114
754 822	24G-28
754 825	41-18
754 826	29C-19
755 004	7B-63
755 005	33D-5
755 008	24G-32
755 009	24G-33
755 010	24G-24
755 011	24G-24
755 013	24G-51
755 200	33D-6
755 202	46-89
755 202	46A-25
755 203	24G-14
755 204	24G-20
755 205	24G-50
755 206	24G-70
755 208	24G-72
755 209	24G-84
755 210	24G-85
755 211	24G-86
755 216	24G-99
755 217	24G-91a
755 222	29C-2
755 223	29C-2
755 427	7A-38
755 427	7B-24
755 428	7A-40
755 428	7B-23
755 800	29C-9
755 803	30-57
755 803	30A-52
755 803	30B-73
755 803	31C-65
755 810	20A-41
755 810	20B-23
755 814	44-30
755 814	45-35
855 819	21-33
755 820	21-37
755 821	21-38
755 822	21-48
755 823	22-22
755 824	7-31
755 825	7A-62
755 825	42-23
755 825	44-21
755 825	45-72
755 826	30B-3

Part Number	Fig. and Index
755 826	31C-3
755 826	31D-33
755 829	21-6
755 830	21-7
755 833	45-1
755 838	21-8
755 839	21-6
755 840	21-1a
755 857	20A-45
755 857	20B-27
755 858	20A-46
755 858	20B-28
755 909	30B-3
755 919	31A-32a
755 929	22-13
755 930	22-15
755 932	29C-8
755 934	29C-16
755 935	29C-30
755 946	15A-38
755 946	15B-39
755 946	15C-41
755 968	29C-14
755 972	29C-21
755 990	46-85
755 990	46A-17
755 992	29C-18
755 993	29C-18
755 994	29C-28
755 995	29C-24
756 037	33D-12
756 038	15A-43a
756 038	15B-44a
756 038	15C-45a
756 045	24G-52
756 052	46-87
756 107	30-60
756 107	30A-55
756 107	30B-76
756 108	30-62
756 108	30A-57
756 108	30B-78
756 108	31C-66
756 109	30-63
756 109	30A-58
756 109	30B-79
756 115	32-16
756 116	20A-36
756 117	20A-49
756 117	20B-31
756 118	20A-51
756 118	20B-33
756 119	20A-58
756 120	20A-62
756 121	20A-63
756 122	30B-8
756 122	31C-8
756 122	31D-8

Part Number	Fig. and Index
756 123	30B-4
756 123	31C-4
756 123	31D-4
756 125	44-8
756 125	45-45
756 129	22-17
756 130	21-36
756 131	22-36
756 132	22-37
756 146	45-36
756 147	21-5a
756 148	21-5
756 149	21-26
756 162	30-67
756 162	30A-62
756 162	30B-83
756 162	31C-68
756 198	45-68
756 217	38-10
756 218	38-10
756 241	29C-7
756 248	45-68
756 248	46-46
756 248	46A-15
756 255	45-68
756 256	7A-82
756 256	7B-68
756 257	42-32
756 295	29C-11
756 300	15A-37
756 300	15B-38
756 300	15C-40
756 301	15A-46
756 301	15B-72
756 302	15A-37
756 302	15B-48
756 302	15C-39
756 303	15A-50
756 303	15B-51
756 303	15C-50
756 304	15A-52
756 304	15B-53
756 304	15C-52
756 307	7A-79
756 307	7B-65
756 319	15A-21
756 319	15B-23
756 319	15C-23
756 337	7B-78
756 347	46-88
756 347	46A-21
756 348	24G-39
756 349	24G-41
756 350	24G-62
756 351	24G-79
756 352	24G-104
756 353	24G-105
756 398	53A-1

Part Number	Fig. and Index
756 399	43A-2
756 504	15A-39
756 504	15B-40
756 504	15C-42
756 505	15A-44
756 505	15B-46
756 505	15C-47
756 507	15A-43b
756 507	15B-45
756 507	15C-46
756 521	24G-40
756 522	24G-69
756 523	24G-82
756 607	29C-35
756 618	20A-44
756 618	20B-26
756 626	29C-10
756 633	7B-69
756 645	30-1b
756 645	30A-2a
756 700	Misc.
756 706	45-56
756 716	42-3
756 720	42-7
756 721	Misc.
756 736	Misc.
756 737	42-31
756 751	Misc.
756 777	27A-3
756 781	Misc.
756 784	Misc.
756 786	Misc.
756 787	Misc.
756 788	Misc.
756 789	Misc.
756 792	Misc.
756 810	Misc.
756 826	Misc.
756 828	Misc.
756 829	Misc.
756 830	Misc.
756 837	Misc.
756 846	Misc.
756 849	Misc.
756 873	42-14
756 892	Misc.
756 904	Misc.
756 907	7A-78
756 907	7B-64
756 910	Misc.
756 943	Misc.
756 966	Misc.
756 967	Misc.
756 968	Misc.
756 969	Misc.
756 970	Misc.
756 971	Misc.
756 975	Misc.

Part Number	Fig. and Index
756 977	Misc.
756 979	Misc.
756 981	Misc.
756 983	Misc.
756 985	Misc.
757 051	46-55
757 051	46A-10
757 052	43-15
757 052	43-19
757 052	46-27
757 052	46-44
757 052	46-54
757 052	46A-9
757 052	46A-24
757 054	Misc.
757 065	Misc.
757 070	Misc.
757 074	Misc.
757 112	Misc.
757 211	31A-77
757 213	15A-17
757 213	15B-19
757 213	15C-19
757 249	29C-17
757 296	46-43
757 297	46-43
757 302	29C-25
757 359	33D-1
757 360	33D-10
757 361	24G-16
757 362	24G-12
757 363	24G-15
757 364	24G-116
757 365	24G-30
757 366	24G-81
757 382	46A-14
757 538	46-56
757 554	29C-22
757 555	29C-23
757 556	29C-23
757 557	29C-29
757 558	29C-32
757 559	29C-33
757 576	24D-24f
757 576	24E-15b
757 576	31A-26c
757 579	43-22
757 579	46-48
757 579	46-50
757 579	46A-4
757 579	46A-6
757 581	43-20
757 581	46-55a
757 583	29C-11
757 590	46-51
757 634	33D-3
757 635	33D-2
757 650	24G-4

Part Number	Fig. and Index
757 651	24G-2
757 652	24G-5
757 653	24G-26
757 654	24G-26
757 655	24G-23
757 656	24G-23
757 657	24G-22
757 658	24G-22
757 659	24G-31
757 660	24G-65
757 661	24G-66
757 662	24G-66
757 663	24G-65
757 664	24G-68
757 665	24G-89
757 666	24G-83
757 667	24G-93
757 681	33D-22
757 682	33D-3
757 684	46A-16
757 711	46A-1
757 732	24G-24a
757 807	46-53
757 810	15A-24
757 810	15B-26
757 810	15C-26
757 826	15B-42
757 826	15C-43
757 827	29C-31
757 828	29C-31
757 833	17-26c
757 833	39-18
757 866	7B-79
757 905	46-26
757 914	24G-10
757 915	24G-1
757 918	24G-21
757 919	24G-27
757 920	24G-25
757 921	24G-25
757 922	24G-35
757 923	24G-36
757 924	24G-37
757 925	24G-55
757 926	24G-56
757 929	24G-57
757 929	24G-58
757 929	24G-59
757 931	24G-61
757 932	24G-80
757 934	24G-96
757 935	24G-97
757 936	24G-113
757 937	24G-113
757 938	7B-84
757 979	24G-42a
758 110	15C-44
758 111	29C-4

Part Number	Fig. and Index
758 112	29C-13
758 141	31B-32b
758 164	46-55b
758 179	46-55c
758 179	46A-12
758 183	24G-29
758 184	24G-71
758 186	24G-91
758 187	24G-94
758 197	29C-13
758 204	29C-20
758 207	46A-11
758 209	53A-3
758 210	53A-8
758 211	53A-9
760 205	Misc.
760 245	Misc.
760 255	Misc.
760 256	Misc.
760 257	Misc.
760 258	Misc.
760 259	Misc.
760 263	Misc.
760 265	Misc.
760 266	Misc.
760 267	Misc.
760 268	Misc.
760 269	Misc.
760 270	Misc.
760 271	Misc.
760 273	Misc.
760 307	Misc.
760 308	Misc.
760 326	Misc.
760 350	Misc.
760 439	Misc.
760 440	Misc.
760 464	24G-6
760 502	10-27
760 502	10A-35
760 516	Misc.
760 590	Misc.
760 592	Misc.
760 643	Misc.
761 156	33D-13
761 157	33D-14
761 158	33D-11
761 159	33D-11
761 160	24G-3
761 474	24G-64
761 475	24G-64
761 476	24G-63
761 477	24G-63
761 478	24G-67
761 479	24G-98
761 480	24G-98

Part Number	Fig. and Index

Part Number	Fig. and Index

Part Number	Fig. and Index